AVR-2

VIDEOTAPE RECORDER

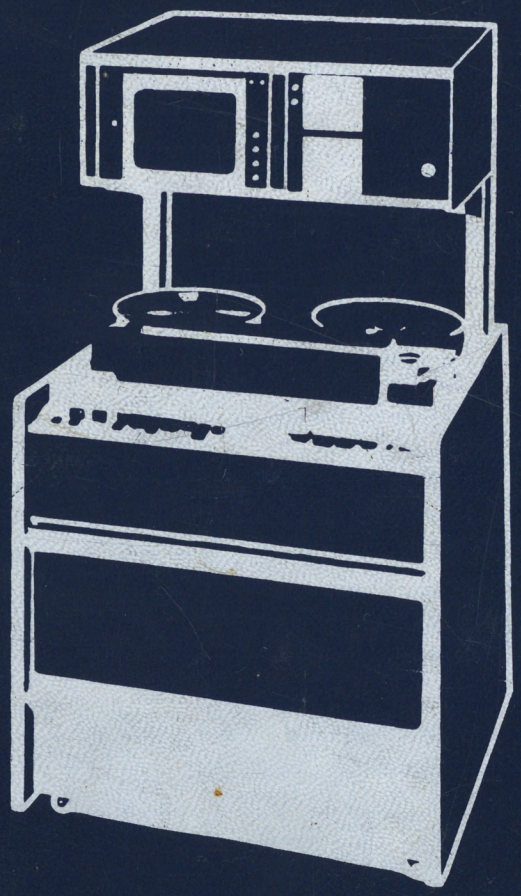

PARTS LISTS AND SCHEMATICS

1809178

AMPEX

Catalog No. 1809178-04
Issued: January 1976

AMPEX
P.O. BOX 8007
REDWOOD CITY, CA. 94063-0907

PHONE # 800-227-8402

AVR-2
VIDEOTAPE RECORDER

PARTS LISTS AND SCHEMATICS

AMPEX CORPORATION
AUDIO-VIDEO SYSTEMS DIVISION

LIST OF EFFECTIVE PAGES

CATALOG NO. 1809178-04

Issued: January 1976

Pages	Dash No.
Title	-04
A thru B/C	-04
i	-04
ii thru iv	-02
v	-04
vi	-03
vii and viii	-02
ix	-04
x	-02
xi thru xiii/xiv	-04
1-0 thru 1-2	-02
2-1/2	-02
2-3 thru 2-5/6	-02
2-7 thru 2-9/10	-02
2-11 thru 2-13/14	-02
2-15/16	-02
2-17 thru 2-21/22	-02
2-23 thru 2-33/34	-02
2-35 thru 2-39/40	-02
2-41 thru 2-43/44	-02
3-1/2	-02
3-3/4	-02
3-5 thru 3-8	-02
4-1/2	-02
4-3/4	-02
4-5 thru 4-7/8	-02
5-1 thru 5-5/6	-02
5-7/8	-02
5-9 thru 5-11/12	-02
6-1/2	-02
6-3/4	-02
6-5 thru 6-7/8	-02
6-9 and 6-10	-02
7-1/2	-02
7-3/4	-02
7-5/6	-02
7-7 thru 7-9/10	-02
8-1/2	-02
8-3 and 8-4	-02
8-5 and 8-6	-04
8-7/8	-02
8-9 thru 8-13/14	-02
8-15 thru 8-20	-02
9-1 thru 9-3/4	-02
9-5/6	-02
9-7/8	-02
9-9 thru 9-13/14	-02
10-1 thru 10-4	-02
11-1 thru 11-5/6	-02
11-7/8	-02
11-9 thru 11-13/14	-02
11-15 thru 11-19/20	-02
11-21 thru 11-25/26	-02
11-27/28	-02
11-29 thru 11-33/34	-02
11-35/36	-02
11-37 thru 11-41/42	-02
11-43 thru 11-47/48	-02
11-49/50	-02
11-51 thru 11-55/56	-02
11-57/58	-02
11-59 thru 11-61/62	-02
11-63 thru 11-67/68	-02
11-69 thru 11-73/74	-02
11-75/76	-04
11-77 thru 11-81/82	-04
11-83 thru 11-89/90	-02
11-91 thru 11-93/94	-02
11-95 thru 11-101/102	-02
11-103/104	-02
11-105/106	-02
11-107 thru 11-111/112	-02

Prepared By

AVSD TECHNICAL PUBLICATIONS

AMPEX CORPORATION 401 Broadway Redwood City, California 94063

PRINTED IN USA

LIST OF EFFECTIVE PAGES

Pages	Dash No.
11-113 thru 11-115/116	-02
11-117 thru 11-121/122	-02
11-123 thru 11-129/130	-02
11-131/132	-02
11-133/134	-02
11-135/136	-02
11-137 thru 11-143/144	-02
11-145/146	-02
11-147/148	-02
11-149/150	-02
11-151 thru 11-155/156	-02
11-157 thru 11-163/164	-02
11-165 thru 11-171/172	-02
11-173 thru 11-177/178	-02
11-179 thru 11-185/186	-02
11-187 thru 11-191/192	-02
11-193/194	-02
11-195 thru 11-199/200	-02
11-201 thru 11-205/206	-02
11-207/208	-02
11-209 thru 11-211/212	-02
11-213/214	-02
11-215 thru 11-217/218	-02
11-219 thru 11-221/222	-02
11-223/224	-02
11-225 thru 11-227/228	-02
11-229/230	-02
11-231 thru 11-233/234	-02
11-235 thru 11-239/240	-02
11-241/242	-02
11-243 thru 11-249/250	-02
11-251/252	-02
11-253 thru 11-257/258	-02
11-259/260	-02
11-261 thru 11-267/268	-02
11-269 thru 11-273/274	-02
11-275/276	-03
11-277/278	-03
11-279 thru 11-283/284	-03
11-285/286	-02
11-287 thru 11-291/292	-02
11-293/294	-02
11-295 thru 11-297/298	-02
11-299 thru 11-305/306	-02
11-307/308	-02
11-309 thru 11-315/316	-02
11-317 thru 11-323/324	-02
12-1 thru 12-3/4	-02
12-5 thru 12-7/8	-02
12-9 thru 12-15/16	-02
12-17 thru 12-25/26	-02

Prepared By

AVSD TECHNICAL PUBLICATIONS

AMPEX CORPORATION 401 Broadway Redwood City, California 94063

INTRODUCTION

This manual, Catalog Number 1809178-04, provides parts lists and schematic diagrams for the AVR-2 Videotape Recorder, Ampex Part Number 1373000.

The three indexes in this manual list the various assemblies and schematics as follows:

- **Indentured List of Assemblies** – List of assemblies in sequence of appearance in the manual.
- **Numerical List of Assemblies** – List of assemblies in numeric sequence.
- **Numerical List of Schematics** – List of schematics in numeric sequence.

INDENTURED LIST OF ASSEMBLIES

TITLE	ASSEMBLY NO.	PAGE NO.
1 SYSTEM		
AVR-2 Videotape Recorder	1373000	1-1
AVR-2 Videotape Recorder Basic Assembly	1374840	1-2
2 TRANSPORT		
Transport Assembly (with Wiring Diagram)	1373043	2-1
Transport Case Assembly	1373044	2-7
Lens Housing Assembly	1373238	2-11
Transport Top Plate Assembly	1373045	2-12
Capstan Idler Housing Assembly	13870	2-15
Capstan Idler Arm Assembly	1365625	2-17
Takeup Reel Assembly	52110	2-18
Solenoid Assembly	13954	2-20
Knob Turntable Assembly	1373102	2-21
Bracket Assembly	13952	2-23
Supply Reel Assembly	1210939	2-24
Solenoid Assembly (See page 2-20)	13954	
Knob Turntable Assembly (See page 2-21)	1373102	
Bracket Assembly (See page 2-23)	13952	
Tension Arm Housing Assembly (Takeup)	1373353	2-26
Tension Arm Housing Assembly (Supply)	1373352	2-27
Tape Timer Assembly, 50 and 60 Cycles	59102	2-28
Capstan Solenoid Assembly	55670	2-30
Transport Harness Assembly	1373206	2-32
Signal Harness Assembly	1373207	2-33
Motion Sensor Assembly	1373078	2-35
Pneumatic Assembly	1373031	2-36
Drain Filter Assembly	1367332	2-38
Auto Shut-Off Valve Assembly	1367331	2-39
Trim Kit	1373199	2-41
Head Cover Assembly	1373237	2-42
3 TRIAC CONTROL		
Triac Control Assembly	1373130	3-1
Lamp Starter PWA	1373312	3-5
Triac Control PWA	1373132	3-6
Triac Control Harness	1373362	3-8

INDENTURED LIST OF ASSEMBLIES (Continued)

TITLE	ASSEMBLY NO.	PAGE NO.
AVR-2 Videotape Recorder (Continued)		
AVR-2 Videotape Recorder Basic Assembly (Continued)		
Transport Assembly (Continued)		
4 CONTROL PANEL ASSEMBLY		
Control Panel Assembly (with Wiring Diagram)	1373048	4-1
Maintenance Control Panel Assembly	1373184	4-5
Control Panel Harness Assembly	1373212	4-6
Control Panel Assembly	1373239	4-7
5 HEAD CHANNEL HOUSING		
Head Channel Housing Assembly	1373116	5-1
RF Preamplifier PWA	1373005	5-2
RF Record Amplifier PWA	1373143	5-7
6 ERASE ASSEMBLIES		
Video Erase Assembly	1373115	6-1
Erase Head PWA (with Schematic)	1373293	6-5
Erase Drive Assembly	1373135	6-6
Video Erase Driver PWA	1373137	6-9
7 AUDIO HEAD AND PREAMPLIFIER ASSEMBLIES		
Audio Head Assembly	1373189	7-1
Audio Preamplifier Assembly	1373481	7-5
Audio Preamplifier PWA, Mono/Dual	1373474	7-7
8 ELECTRONICS		
Electronics Assembly (with Wiring Diagram)	1373036	8-1
Electronics Chassis Assembly	1373037	8-9
Card Rack Chassis Assembly	1373201	8-10
Electronics Harness Assembly	1373202	8-11
Main Electronics Harness	1373208	8-12
Heatsink Harness Assembly	1373209	8-13
Motherboard Assembly	1373210	8-15
Motherboard DTBC PWA	1373230	8-16
Motherboard VTR PWA	1373233	8-18
Rear Panel Assembly	1373123	8-20

INDENTURED LIST OF ASSEMBLIES (Continued)

TITLE	ASSEMBLY NO.	PAGE NO.
AVR-2 Videotape Recorder (Continued)		
AVR-2 Videotape Recorder Basic Assembly (Continued)		
Electronics Assembly (Continued)		
9 POWER SUPPLY		
Power Supply Assembly	1373038	9-1
Heatsink Rectifier Assembly	1373211	9-7
Power Supply Harness	1373142	9-9
Chassis Assembly	1373140	9-10
Servo and Relay Power Supply Regulator PWA	1373124	9-12
10 MISCELLANEOUS ASSEMBLIES		
Miscellaneous Parts Kit	1373200	10-1
Extender Board Assembly, 10 Pin Dual	1374830	10-2
Extender Card Assembly	1373377	10-3
Audio Rear Filler Assembly	1373388	10-4
11 PRINTED WIRING ASSEMBLIES		
Servo Boards 1–5		
Manual Tracking and Capstan Drive PWA, Module No. 1	1373112	11-1
Auto Tracking and Capstan Drive PWA, Module No. 1*	1373298	11-7
Capstan Servo PWA, Module No. 2, NTSC/PAL-M	1373150	11-15
Capstan Servo PWA, Module No. 2, PAL/SECAM	1373319	11-21
Control Track and Sync Processor PWA, Module No. 3, NTSC	1373168	11-27
Control Track and Sync Processor PWA, Module No. 3, PAL/SECAM, PAL-M	1373261	11-35
Head Phase Comparator PWA, Module No. 4	1373171	11-43
Head Driver PWA, Module No. 5	1373016	11-49
Boards 6–11		
Control Logic PWA, Module No. 6	1373269	11-57
Editor PWA, Module No. 7, NTSC/PAL-M*	1373127	11-63
Editor PWA, Module No. 7, PAL/SECAM*	1373467	11-69

*Optional

INDENTURED LIST OF ASSEMBLIES (Continued)

TITLE	ASSEMBLY NO.	PAGE NO.
AVR-2 Videotape Recorder (Continued)		
11 PRINTED WIRING ASSEMBLIES (Continued)		
Boards 6–11 (Continued)		
Cue PWA, Module No. 8	1374928	11-75
Audio PWA, Module No. 9/10	1373478	11-83
Power Supply Regulator PWA, Module No. 11	1373120	11-91
Signal System Boards 12–16		
Modulator PWA, Module No. 12	1373147	11-95
Monitor Switch Logic and Color Framing Detector PWA, Module No. 13	1373153	11-105
Burst Detector PWA, Module No. 14	1375386	11-113
Auto-Chroma PWA, Module No. 14*	1373165	11-117
Switcher and Equalizer PWA, Module No. 15	1373055	11-123
Demodulator PWA, Module No. 16	1373058	11-135
Digital Time-Base Corrector Boards 17–28		
Video Input Module Assembly, Module No. 17, NTSC/PAL-M	1374165	11-149
Video Input PWA, Board No. 17, NTSC/PAL-M	1374010	11-151
Video Input Module Assembly, Module No. 17, PAL/SECAM	1374166	11-157
Video Input PWA, Board No. 17, PAL/SECAM	1374014	11-158
A/D Converter A and B Module Assembly, Module No. 18/19	1374167	11-165
A/D Converter A PWA, Board No. 18	1374254	11-166
A/D Converter B PWA, Board No. 19	1374257	11-173
Clock Generator Module Assembly, Module No. 20, PAL-M	1374287	11-179
Clock Generator PWA, Board No. 20, PAL-M	1374034	11-180
Clock Generator Module Assembly, Module No. 20, NTSC	1374168	11-187
Clock Generator PWA, Board No. 20, NTSC	1374026	11-188
Clock Generator Module Assembly, Module No. 20, PAL/SECAM	1374179	11-193
Clock Generator PWA, Board No. 20, PAL/SECAM	1374030	11-195
Burst Store Generator Module Assembly, Module No. 21	1374169	11-201
Burst Store Generator PWA, Board No. 21	1374042	11-202

*Optional

INDENTURED LIST OF ASSEMBLIES (Continued)

TITLE	ASSEMBLY NO.	PAGE NO.
AVR-2 Videotape Recorder (Continued)		
11 PRINTED WIRING ASSEMBLIES (Continued)		
Digital Time-Base Corrector Boards 17–28 (Continued)		
256 Word Memory Module Assembly, Module No. 22, NTSC/PAL-M	1374170	11-207
256 Word Memory PWA, Board No. 22, NTSC/PAL-M	1374050	11-209
512 Word Memory Module Assembly, Module No. 22, PAL/SECAM	1374187	11-213
512 Word Memory PWA, Board No. 22, PAL/SECAM	1374054	11-215
Data Bypass PWA, Module No. 23	1374109	11-219
Two Line Delay Module Assembly, Module No. 23, NTSC*	1374171	11-223
Two Line Delay PWA, Board No. 23, NTSC	1374058	11-225
Two Line Delay Module Assembly, Module No. 23, PAL/SECAM*	1374181	11-229
Two Line Delay PWA, Board No. 23, PAL/SECAM	1374062	11-231
Main D/A Module Assembly, Module No. 24	1374172	11-235
Main D/A PWA, Board No. 24	1374066	11-236
Video Output Module Assembly, Module No. 25	1374173	11-241
Video Output PWA, Board No. 25	1374070	11-243
Velocity Compensator No. 1 Module Assembly, Module No. 26*	1374174	11-251
Velocity Compensator No. 1 PWA, Board No. 26	1374244	11-253
Velocity Compensator No. 2 Module Assembly, Module No. 27*	1374175	11-259
Velocity Compensator No. 2 PWA, Module No. 27	1374082	11-261
Logic Module Assembly, Module No. 28, NTSC	1374176	11-269
Logic PWA, Board No. 28, NTSC	1374278	11-270
Logic Module Assembly, Module No. 28, PAL/ SECAM	1374183	11-275
Logic PWA, Board No. 28, PAL/SECAM	1374284	11-277
Logic Module Assembly, Module No. 28, PAL-M	1374293	11-285
Logic PWA, Board No. 28, PAL-M	1374094	11-287
Sync Generator Boards 29–30		
Sync Generator Logic Module Assembly, Module No. 29, PAL/SECAM, PAL-M	1374178	11-293
Sync Generator Logic PWA, Board No. 29, PAL/SECAM, PAL-M	1373255	11-295
Sync Generator Module Assembly, Module No. 30, NTSC	1373400	11-299
Sync Generator PWA, Board No. 30, NTSC	1373083	11-300

*Optional

INDENTURED LIST OF ASSEMBLIES (Continued)

TITLE	ASSEMBLY NO.	PAGE NO.
AVR-2 Videotape Recorder (Continued)		
11 PRINTED WIRING ASSEMBLIES (Continued)		
Sync Generator Boards 29–30 (Continued)		
Sync Generator Module Assembly, Module No. 30, PAL/SECAM	1374185	11-307
Sync Generator PWA, Board No. 30, PAL/SECAM	1373087	11-309
Sync Generator Module Assembly, Module No. 30, PAL-M	1374186	11-317
Sync Generator PWA, Board No. 30, PAL-M	1373091	11-318
12 ACCESSORIES		
Monitor Bridge Assembly	1373033	12-1
Monitor Panel Assembly	1373035	12-2
Monitor Amplifier PWA	1373258	12-5
Monitor Panel Harness Assembly	1373245	12-9
Speaker Enclosure Assembly	1373246	12-10
Editor Kit	1373249	12-11
Editor PWA, Module No. 7, NTSC/PAL-M (See page 11-63)	1373127	
Editor PWA, Module No. 7, PAL/SECAM (See page 11-69)	1373467	
Harness Assembly	1373250	12-12
Dual Track Audio Kit, Mono/Split Erase	1373240	12-13
Dual Track Head Assembly, Mono/Split Erase	1373241	12-14
Audio PWA, Module No. 9/10 (See page 11-83)	1373478	
Audio 2 Rear Assembly	1373384	12-17
Cooling Package Assembly	1373496	12-18
Fan Assembly	1373459	12-19
Service Tool Kit	1373244	12-20
Console Assembly	1373034	12-21
Air Compressor Assembly	1373030	12-22
Relay Box Assembly (with Schematic)	1373378	12-24
Air Compressor Relay Cable Assembly	1373395	12-25

NUMERICAL LIST OF ASSEMBLIES

ASSEMBLY NO.	TITLE	PAGE NO.
13870	Capstan Idler Housing Assembly	2-15
13952	Bracket Assembly	2-23
13954	Solenoid Assembly	2-20
52110	Takeup Reel Assembly	2-18
55670	Capstan Solenoid Assembly	2-30
59102	Tape Timer Assembly, 50 and 60 Cycles	2-28
1210939	Supply Reel Assembly	2-24
1365625	Capstan Idler Arm Assembly	2-17
1367331	Auto Shut-Off Valve Assembly	2-39
1367332	Drain Filter Assembly	2-38
1373000	AVR-2 Videotape Recorder	1-1
1373005	RF Preamplifier PWA	5-2
1373016	Head Driver PWA, Module No. 5	11-49
1373030	Air Compressor Assembly	12-22
1373031	Pneumatic Assembly	2-36
1373033	Monitor Bridge Assembly	12-1
1373034	Console Assembly	12-21
1373035	Monitor Panel Assembly	12-2
1373036	Electronics Assembly (with Wiring Diagram)	8-1
1373037	Electronics Chassis Assembly	8-9
1373038	Power Supply Assembly	9-1
1373043	Transport Assembly (with Wiring Diagram)	2-1
1373044	Transport Case Assembly	2-7
1373045	Transport Top Plate Assembly	2-12
1373048	Control Panel Assembly (with Wiring Diagram)	4-1
1373055	Switcher and Equalizer PWA, Module No. 15	11-123
1373058	Demodulator PWA, Module No. 16	11-135
1373078	Motion Sensor Assembly	2-35
1373083	Sync Generator PWA, Board No. 30, NTSC	11-300
1373087	Sync Generator PWA, Board No. 30, PAL/SECAM	11-309
1373091	Sync Generator PWA, Board No. 30, PAL-M	11-318
1373102	Knob Turntable Assembly	2-21
1373112	Manual Tracking and Capstan Drive PWA, Module No. 1	11-1
1373115	Video Erase Assembly	6-1
1373116	Head Channel Housing Assembly	5-1
1373120	Power Supply Regulator PWA, Module No. 11	11-91
1373123	Rear Panel Assembly	8-20
1373124	Servo and Relay Power Supply Regulator PWA	9-12
1373127	Editor PWA, Module No. 7, NTSC/PAL-M	11-63

NUMERICAL LIST OF ASSEMBLIES (Continued)

ASSEMBLY NO.	TITLE	PAGE NO.
1373130	Triac Control Assembly	3-1
1373132	Triac Control PWA	3-6
1373135	Erase Drive Assembly	6-6
1373137	Video Erase Driver PWA	6-9
1373140	Chassis Assembly	9-10
1373142	Power Supply Harness	9-9
1373143	RF Record Amplifier PWA	5-7
1373147	Modulator PWA, Module No. 12	11-95
1373150	Capstan Servo PWA, Module No. 2, NTSC/PAL-M	11-15
1373153	Monitor Switch Logic and Color Framing Detector PWA, Module No. 13	11-105
1373165	Auto-Chroma PWA, Module No. 14	11-117
1373168	Control Track and Sync Processor PWA, Module No. 3, NTSC	11-27
1373171	Head Phase Comparator PWA, Module No. 4	11-43
1373184	Maintenance Control Panel Assembly	4-5
1373189	Audio Head Assembly	7-1
1373199	Trim Kit	2-41
1373200	Miscellaneous Parts Kit	10-1
1373201	Card Rack Chassis Assembly	8-10
1373202	Electronics Harness Assembly	8-11
1373206	Transport Harness Assembly	2-32
1373207	Signal Harness Assembly	2-33
1373208	Main Electronics Harness	8-12
1373209	Heatsink Harness Assembly	8-13
1373210	Motherboard Assembly	8-15
1373211	Heatsink Rectifier Assembly	9-7
1373212	Control Panel Harness Assembly	4-6
1373230	Motherboard DTBC PWA	8-16
1373233	Motherboard VTR PWA	8-18
1373237	Head Cover Assembly	2-42
1373238	Lens Housing Assembly	2-11
1373239	Control Panel Assembly	4-7
1373240	Dual Track Audio Kit, Mono/Split Erase	12-13
1373241	Dual Track Head Assembly, Mono/Split Erase	12-14
1373244	Service Tool Kit	12-20
1373245	Monitor Panel Harness Assembly	12-9
1373246	Speaker Enclosure Assembly	12-10

NUMERICAL LIST OF ASSEMBLIES (Continued)

ASSEMBLY NO.	TITLE	PAGE NO.
1373249	Editor Kit	12-11
1373250	Harness Assembly	12-12
1373255	Sync Generator Logic PWA, Board No. 20, PAL/SECAM, PAL-M	11-295
1373258	Monitor Amplifier PWA	12-5
1373261	Control Track and Sync Processor PWA, Module No. 3, PAL/SECAM, PAL-M	11-35
1373269	Control Logic PWA, Module No. 6	11-57
1373293	Erase Head PWA (with Schematic)	6-5
1373298	Auto Tracking and Capstan Drive PWA, Module No. 1	11-7
1373312	Lamp Starter PWA	3-5
1373319	Capstan Servo PWA, Module No. 2, PAL/SECAM	11-21
1373352	Tension Arm Housing Assembly (Supply)	2-27
1373353	Tension Arm Housing Assembly (Takeup)	2-26
1373362	Triac Control Harness	3-8
1373377	Extender Card Assembly	10-3
1373378	Relay Box Assembly (with Schematic)	12-24
1373384	Audio 2 Rear Assembly	12-17
1373388	Audio Rear Filler Assembly	10-4
1373395	Air Compressor Relay Cable Assembly	12-25
1373400	Sync Generator Module Assembly, Module No. 30, NTSC	11-299
1373459	Fan Assembly	12-19
1373467	Editor PWA, Module No. 7, PAL/SECAM	11-69
1373474	Audio Preamplifier PWA, Mono/Dual	7-7
1373478	Audio PWA, Module No. 9/10	11-83
1373481	Audio Preamplifier Assembly	7-5
1373496	Cooling Package Assembly	12-18
1374010	Video Input PWA, Board No. 17, NTSC/PAL-M	11-151
1374014	Video Input PWA, Board No. 17, PAL/SECAM	11-158
1374026	Clock Generator PWA, Board No. 20, NTSC	11-188
1374030	Clock Generator PWA, Board No. 20, PAL/SECAM	11-195
1374034	Clock Generator PWA, PAL-M	11-180
1374042	Burst Store Generator PWA, Board No. 21	11-202
1374050	256 Word Memory PWA, Board No. 22, NTSC/PAL-M	11-209
1374054	512 Word Memory PWA, Board No. 22, PAL/SECAM	11-215
1374058	Two Line Delay PWA, Board No. 23, NTSC	11-225
1374062	Two Line Delay PWA, Board No. 23, PAL/SECAM	11-231
1374066	Main D/A PWA, Board No. 24	11-236
1374070	Video Output PWA, Board No. 25	11-243
1374082	Velocity Compensator No. 2 PWA, Board No. 27	11-261

NUMERICAL LIST OF ASSEMBLIES (Continued)

ASSEMBLY NO.	TITLE	PAGE NO.
1374094	Logic PWA, Board No. 28, PAL-M	11-287
1374109	Data Bypass PWA, Module No. 23	11-219
1374165	Video Input Module Assembly, Module No. 17, NTSC/PAL-M	11-149
1374166	Video Input Module Assembly, Module No. 17, PAL/SECAM	11-157
1374167	A/D Converter A and B Module Assembly, Module No. 18/19	11-165
1374168	Clock Generator Module Assembly, Module No. 20, NTSC	11-187
1374169	Burst Store Generator Module Assembly, Module No. 21	11-201
1374170	256 Word Memory Module Assembly, Module No. 22, NTSC/PAL-M	11-207
1374171	Two Line Delay Module Assembly, Module No. 23, NTSC	11-223
1374172	Main D/A Module Assembly, Module No. 24	11-235
1374173	Video Output Module Assembly, Module No. 25	11-241
1374174	Velocity Compensator No. 1 Module Assembly, Module No. 26	11-251
1374175	Velocity Compensator No. 2 Module Assembly, Module No. 27	11-259
1374176	Logic Module Assembly, Module No. 28, NTSC	11-269
1374178	Sync Generator Logic Module Assembly, Module No. 29, PAL/SECAM, PAL-M	11-293
1374179	Clock Generator Module Assembly, Module No. 20, PAL/SECAM	11-193
1374181	Two Line Delay Module Assembly, Module No. 23, PAL/SECAM	11-229
1374183	Logic Module Assembly, Module No. 28, PAL/SECAM	11-275
1374185	Sync Generator Module Assembly, Module No. 30, PAL/SECAM	11-307
1374186	Sync Generator Module Assembly, Module No. 30, PAL-M	11-317
1374187	512 Word Memory Module Assembly, Module No. 22, PAL/SECAM	11-213
1374244	Velocity Compensator No. 1 PWA, Board No. 26	11-253
1374254	A/D Converter A PWA, Board No. 18	11-166
1374257	A/D Converter B PWA, Board No. 19	11-173
1374278	Logic PWA, Board No. 28, NTSC	11-270
1374284	Logic PWA, Board No. 28, PAL/SECAM	11-277
1374287	Clock Generator Module Assembly, Module No. 20, PAL-M	11-179
1374293	Logic Module Assembly, Module No. 28, PAL-M	11-285
1374830	Extender Board Assembly, 10 Pin Dual	10-2
1374840	AVR-2 Videotape Recorder Basic Assembly	1-2
1374928	Cue PWA, Module No. 8	11-75
1375386	Burst Detector PWA, Module No. 14	11-113

NUMERICAL LIST OF SCHEMATICS

SCHEMATIC NO.	TITLE	PAGE NO.
1373007	RF Preamplifier PWA	5-5
1373057	Switcher and Equalizer PWA, High Band, Module No. 15, NTSC/PAL-M	11-129
1373060	Demodulator PWA, High Band, Module No. 16, NTSC/PAL-M	11-143
1373061	Demodulator PWA, High Band, Module No. 16, PAL/SECAM	11-145
1373089	Sync Generator PWA, Board No. 30, PAL/SECAM	11-315
1373093	Sync Generator PWA, Board No. 30, PAL-M	11-323
1373122	Power Supply Assembly	9-3
	Power Supply Regulator PWA, Board No. 11	9-3
	Servo and Relay Power Supply Regulator PWA	9-3
	Heatsink Harness Assembly	9-3
1373129	Editor PWA, Module No. 7, NTSC/PAL-M	11-67
1373134	Triac Control Assembly	3-3
	Lamp Starter PWA	3-3
	Triac Control PWA	3-3
1373139	Erase Drive Assembly	6-7
	Video Erase Driver PWA	6-7
1373145	RF Record Amplifier PWA	5-11
1373149	Modulator PWA, High Band, Module No. 12	11-101
1373152	Capstan Servo PWA, Module No. 2, NTSC/PAL-M	11-19
1373155	Monitor Switch Logic and Color Framing Detector PWA, Module No. 13	11-111
1373167	Auto-Chroma PWA, Module No. 14	11-121
1373170	Control Track and Sync Processor PWA, Module No. 3, NTSC	11-33
1373173	Head Phase Comparator PWA, Module No. 4	11-47
1373257	Sync Generator Logic PWA, Board No. 29, PAL/PAL-M/SECAM	11-297
1373260	Monitor Amplifier PWA	12-7
1373263	Control Track and Sync Processor PWA, Module No. 3, PAL/SECAM, PAL-M	11-41
1373299	Auto Tracking and Capstan Drive PWA, Module No. 1	11-13
1373321	Capstan Servo PWA, Module No. 2, PAL/SECAM	11-25
1373322	Monitor Panel Assembly	12-3
	Monitor Panel Harness Assembly	12-3
1373342	Electronics Wiring Diagram	8-3
1373363	Tape Transport Assembly Wiring Diagram	2-5
1373364	Control Panel Assembly Wiring Diagram	4-3
1373427	Control Logic PWA, Module No. 6	11-61
1373456	Sync Generator PWA, Board No. 30, NTSC	11-305

NUMERICAL LIST OF SCHEMATICS (Continued)

SCHEMATIC NO.	TITLE	PAGE NO.
1373461	Head Driver PWA, Module No. 5	11-55
1373469	Editor PWA, Module No. 7, PAL/SECAM	11-73
1373471	Manual Tracking and Capstan Drive PWA, Module No. 1	11-5
1373476	Audio Preamplifier PWA, Mono/Dual	7-9
1373480	Audio PWA, Module No. 9/10	11-89
1373492	Switcher and Equalizer PWA, High Band, Module No. 15 PAL/SECAM	11-131
1374012	Video Input PWA, Board No. 17, NTSC/PAL-M	11-155
1374016	Video Input PWA, Board No. 17, PAL/SECAM	11-163
1374028	Clock Generator PWA, Board No. 20, NTSC	11-191
1374032	Clock Generator PWA, Board No. 20, PAL/SECAM	11-199
1374036	Clock Generator PWA, Board No. 20, PAL-M	11-185
1374044	Burst Store Generator PWA, Board No. 21	11-205
1374052	256 Word Memory PWA, Board No. 22, NTSC/PAL-M	11-211
1374056	512 Word Memory PWA, Board No. 22, PAL/SECAM	11-217
1374060	Two Line Delay PWA, Board No. 23, NTSC	11-227
1374064	Two Line Delay PWA, Board No. 23, PAL/SECAM	11-233
1374068	Main D/A PWA, Board No. 24	11-239
1374084	Velocity Compensator No. 2 PWA, Board No. 27	11-267
1374096	Logic PWA, Board No. 28, PAL-M	11-291
1374111	Data Bypass PWA	11-221
1374224	Video Output PWA, Board No. 25	11-249
1374246	Velocity Compensator No. 1 PWA, Board No. 26	11-257
1374256	A/D Converter A PWA, Board No. 18	11-171
1374259	A/D Converter B PWA, Board No. 19	11-177
1374280	Logic PWA, Board No. 28, NTSC	11-273
1374286	Logic PWA, Board No. 28, PAL/SECAM	11-283
1374930	Cue PWA, Module No. 8	11-81
1375287	Demodulator PWA, Low Band Color, Module No. 16	11-147
1375297	Modulator PWA, Low Band Color, Module No. 12	11-103
1375298	Switcher and Equalizer PWA, Low Band Color, Module No. 15	11-133
1375388	Burst Detector PWA, Module No. 14	11-115

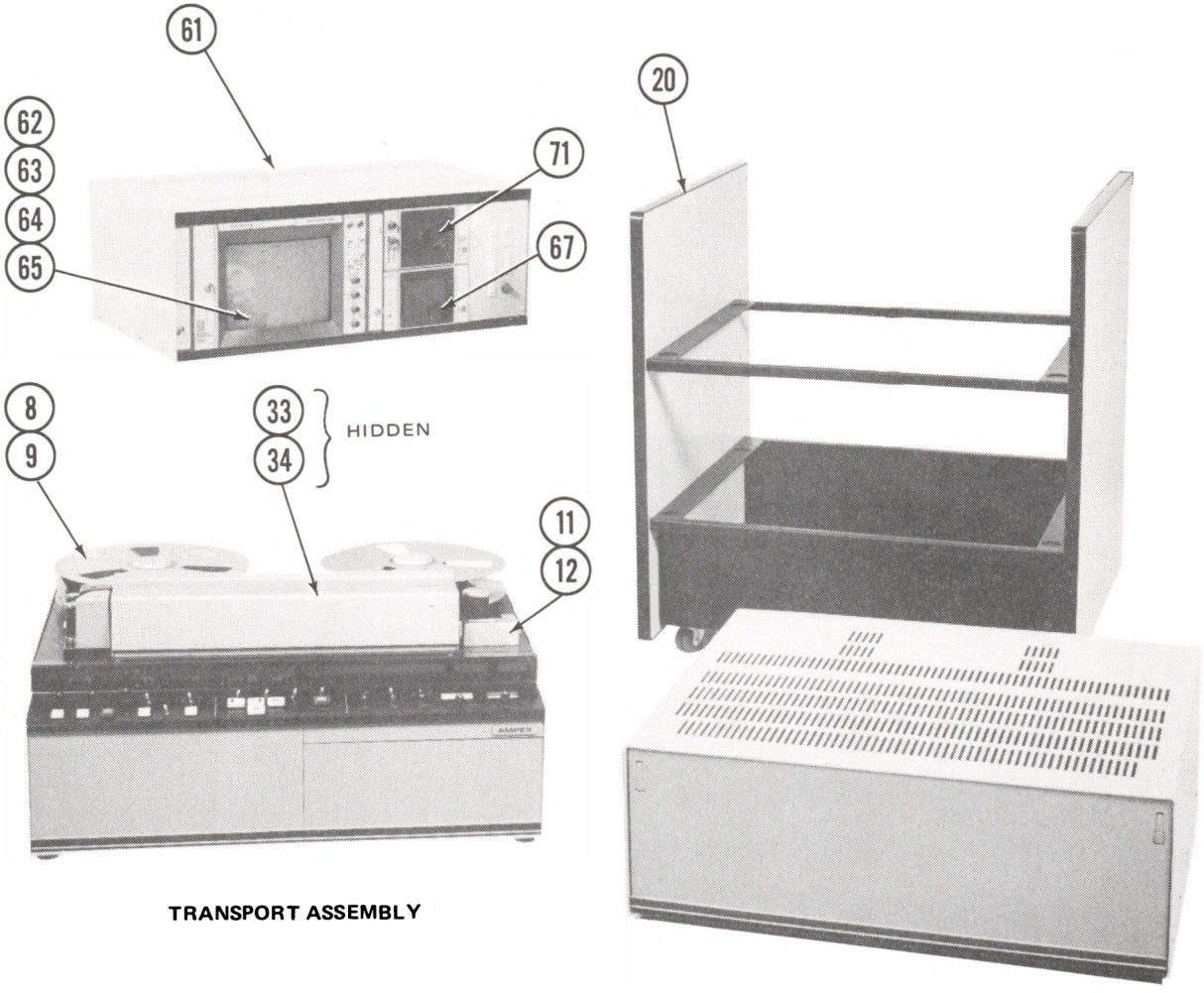

TRANSPORT ASSEMBLY

ELECTRONICS ASSEMBLY

AVR-2 Videotape Recorder

ITEM NO.	AMPEX PART NO.	REFERENCE NUMBER	DESCRIPTION	JEDEC NO. OR MFR. PART NO.
	1373000-13		AVR-2 VIDEOTAPE RECORDER (NHA CATALOG)	
1	1374840-04		AVR2 VIDEOTAPE RECORDER ASSY	
3	1373039-01		525 HB NTSC KIT	
4	1374001-01		PAL-M MODIFICATION KIT	
5	1373041-02		625 HB PAL/SECAM KIT	
8	1374554-01		TAPE, AMPEX STD ALIGN	
9	1374556-01		TAPE, AMPEX STD ALIGN	
11	59102-09		TAPE TIMER, 60 HZ	
12	59102-10		TAPE TIMER, 50 HZ	
16	1373030-01		AIR COMPRESSOR ASSY (ACCESSORY)	
20	1373034-02		CONSOLE ASSEMBLY (ACCESSORY)	
21	1375386-01		BURST DETECTOR PWA	
22	1373165-04		AUTO CHROMA PWA (ACCESSORY)	
23	1373244-01		SERVICE TOOL KIT (ACCESSORY)	
25	1373290-01		525 NRSC STABLE OSCILLATOR (ACCESSORY)	
32	1373857-01		TAPE, AMPEX "SMPTE" VID TEST (ACCESSORY)	
33	1373047-01		VIDEO HEAD ASSY, 10 MIL	
34	1373047-02		VIDEO HEAD ASSY, 5 MIL	
35	1373112-07		MANUAL TRACKING CAPSTAN DRIVE PWA, BD NO. 1	
36	1373298-03		AUTO TRACKING AND CAPSTAN DRIVE PWA, BD NO. 1	
38	1373249-02		525 EDITOR KIT (ACCESSORY)	
39	1373249-03		625 EDITOR KIT (ACCESSORY)	
49	1373182-03		OVERLAY, BLANK	
43	1374109-01		DATA BYPASS PWA	
44	1374171-01		TWO LINE DELAY MODULE ASSY (525) BD NO. 23 (ACCESSORY)	
45	1374181-01		TWO LINE DELAY MODULE ASSY (625) BD NO. 23 (ACCESSORY)	
48	1373251-01		VELOCITY COMPENSATOR KIT, NTSC/PAL-M, BD NOS. 26/27	
49	1373251-02		VELOCITY COMPENSATOR KIT, PAL, BD NOS. 26/27	
52	1373474-05		AUDIO PREAMP PWA (MONO)	
55	1373240-11		DUAL TRACK AUDIO KIT (MONO ERASE)	
56	1373240-12		DUAL TRACK AUDIO KIT (SPLIT ERASE)	
59	1373496-01		COOLING PACKAGE ASSY (ACCESSORY)	
61	1373033-04		MONITOR BRIDGE ASSY (ACCESSORY)	
62	545-213		COLOR MONITOR 525 NTSC (ACCESSORY)	TEK650
63	545-214		COLOR MONITOR, 625 PAL (ACCESSORY)	TEK651
64	545-215		COLOR MONITOR, 525 PAL (ACCESSORY)	TEK652
65	545-223		MONITOR, MONOCHROME (ACCESSORY)	CONRAC CZA-14
66	545-228		MONITOR, MONOCHROME	TEK632
67	545-230		MONITOR, VECTOR DISPLAY (ACCESSORY)	
68	545-232		MONITOR, WAVEFORM, 625	
69	545-233		MONITOR, WAVEFORM, 525 (ACCESSORY)	
71	545-235		MONITOR, WAVEFORM, 625 (AUSTRALIAN) (ACCESSORY)	
72	1373388-01		AUDIO REAR FILLER ASSY	
73	545-225		PANEL, FR, MON	

V

SHEET 1 OF 1

ITEM NO.	AMPEX PART NO.	REFERENCE NUMBER	DESCRIPTION	JEDEC NO. OR MFR. PART NO.
	1374840-04		AVR-2 VIDEOTAPE RECORDER BASIC ASSEMBLY (NHA 1373000)	
4	1373199-02		ELECTRONICS TRIM KIT	
5	1373200-02		MISCELLANEOUS PARTS KIT	
6	1373036-09		ELECTRONICS ASSY	
7	1373043-08		TRANSPORT ASSY	
				C

SHEET 1 OF 1

ITEM NO.	AMPEX PART NO.	REFERENCE NUMBER	DESCRIPTION	JEDEC NO. OR MFR. PART NO.
	1373043-08		TRANSPORT ASSEMBLY (NHA 1374840)	
1	1373031-01		PNEUMATIC ASSEMBLY	
4	1373048-01		CONTROL PANEL ASSEMBLY	
5	1373078-01		MOTION SENSOR ASSEMBLY	
8	1373130-03		TRIAC CONTROL ASSEMBLY	
10	1373189-01		AUDIO HEAD ASSEMBLY (MONO)	
11	1373044-03		TRANSPORT CASE ASSEMBLY	
12	1373206-04		TRANSPORT HARNESS ASSEMBLY	
14	1373237-01		COVER, HD	
15	1373045-03		TRANSPORT TOP PLATE ASSY	
19	1373363		WIRING DIAGRAM, TRANSPORT	
22	1373481-01		AUDIO PREAMPLIFIER ASSEMBLY	
26	310-780		LATCH, HOOK-LOCK	
27	090-182		METER, ELAPSED TIME	
32	470-388		SCREW, CAP, BTN HD, NYLON, NO. 4-40 UNC-3A X 0.375 LG	
38	1373135-03		ERASE DRIVER ASSEMBLY	
41	310-624		TURNLOCK STUD, SLOTTED HD	
43	440-996		PIPE FITTING, INSERT BARBED, 5/16 HOSE TO 1/8 EPT	
44	470-075		SCREW, CAP, HEX SOC, NO. 6-32 X 1.00 LG	
45	470-010		SCREW, SOC HD, NO. 4-40 X 0.375	
46	470-011		SCREW, SOC HD, NO. 4-40 X 0.438	
47	470-018		SCREW, SOC HD, NO. 6-32 X 0.375	
48	470-020		SCREW, SOC HD, NO. 6-32 X 0.50	
49	470-022		SCREW, SOC HD, NO. 6-32 X 0.75	
50	470-029		SCREW, SOC HD, NO. 8-32 X 0.50	
51	470-036		SCREW, SOC HD, NO. 10-32 X 0.375	
52	470-091		SCREW, SOC HD, NO. 10-32 X 0.75	
53	471-069		SCREW, PAN HD, NO. 6-32 X 0.375	
54	471-075		SCREW, PAN HD, NO. 6-32 X 1.0	
55	471-085		SCREW, PAN HD, NO. 8-32 X 0.25	
56	471-086		SCREW, PAN HD, NO. 10-32 X 0.312	
57	471-354		SCREW, FLAT HD, NO. 10-32 X 0.375	
59	473-331		SCREW, NO. 6-32 X 0.50, SEMS	
60	496-004		NUT, KEP, NO. 4-40	
61	496-005		NUT, KEP, NO. 6-32	
63	501-009		WASHER, PLAIN, NO. 6	
64	501-070		WASHER, PLAIN, NO. 10	
65	501-188		WASHER, SM PATT, NO. 6	
66	502-009		WASHER, LOCK, NO. 6	
67	502-002		WASHER, SPR LOCK, NO. 4	
68	502-003		WASHER, SPR LOCK, NO. 6	
69	502-004		WASHER, SPR LOCK, NO. 8	
70	502-005		WASHER, SPR LOCK, NO. 10	
				R

ASSEMBLY NO. 1373043 TITLE TRANSPORT ASSEMBLY

ITEM NO.	AMPEX PART NO.	REFERENCE NUMBER	DESCRIPTION	JEDEC NO. OR MFR. PART NO.
71	502-011		WASHER, SPR LOCK, SST, NO. 10	
73	1373207-03		SIGNAL, HARN ASSY	
74	506-013		WASHER, "D", NO. 6	
75	1373116-03		HEAD CHANNEL HOUSING ASSEMBLY	
77	1373115-05		VIDEO ERASE ASSEMBLY	
				R

SHEET 2 OF 2

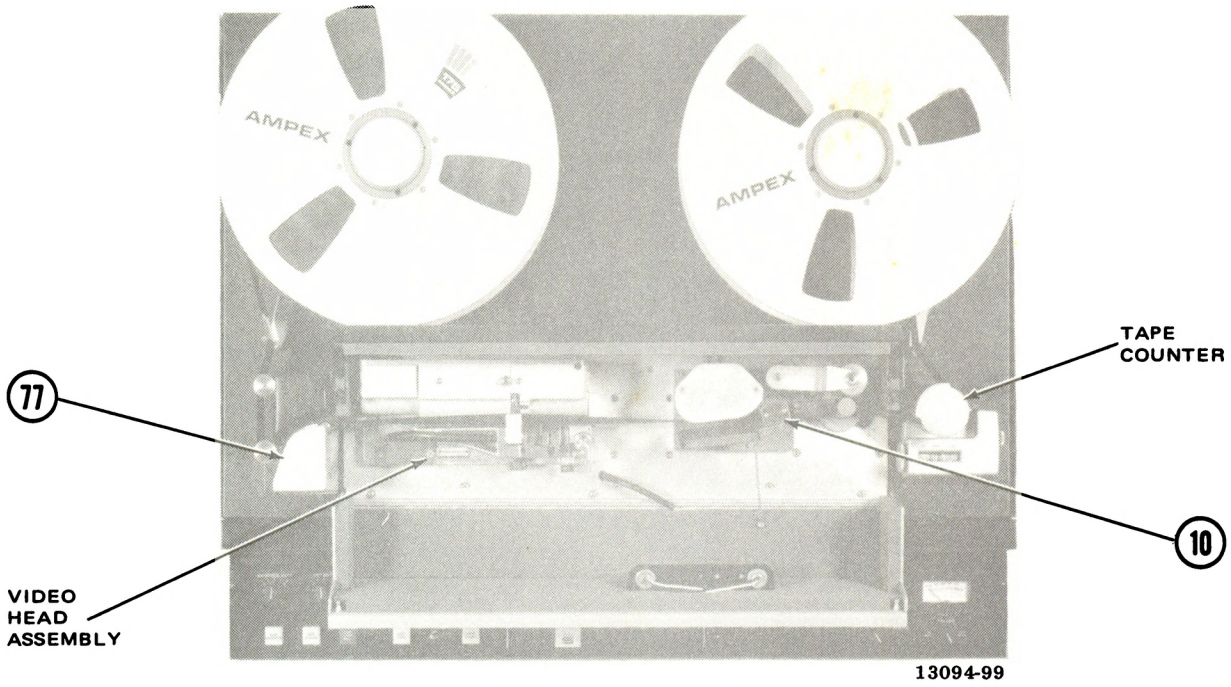

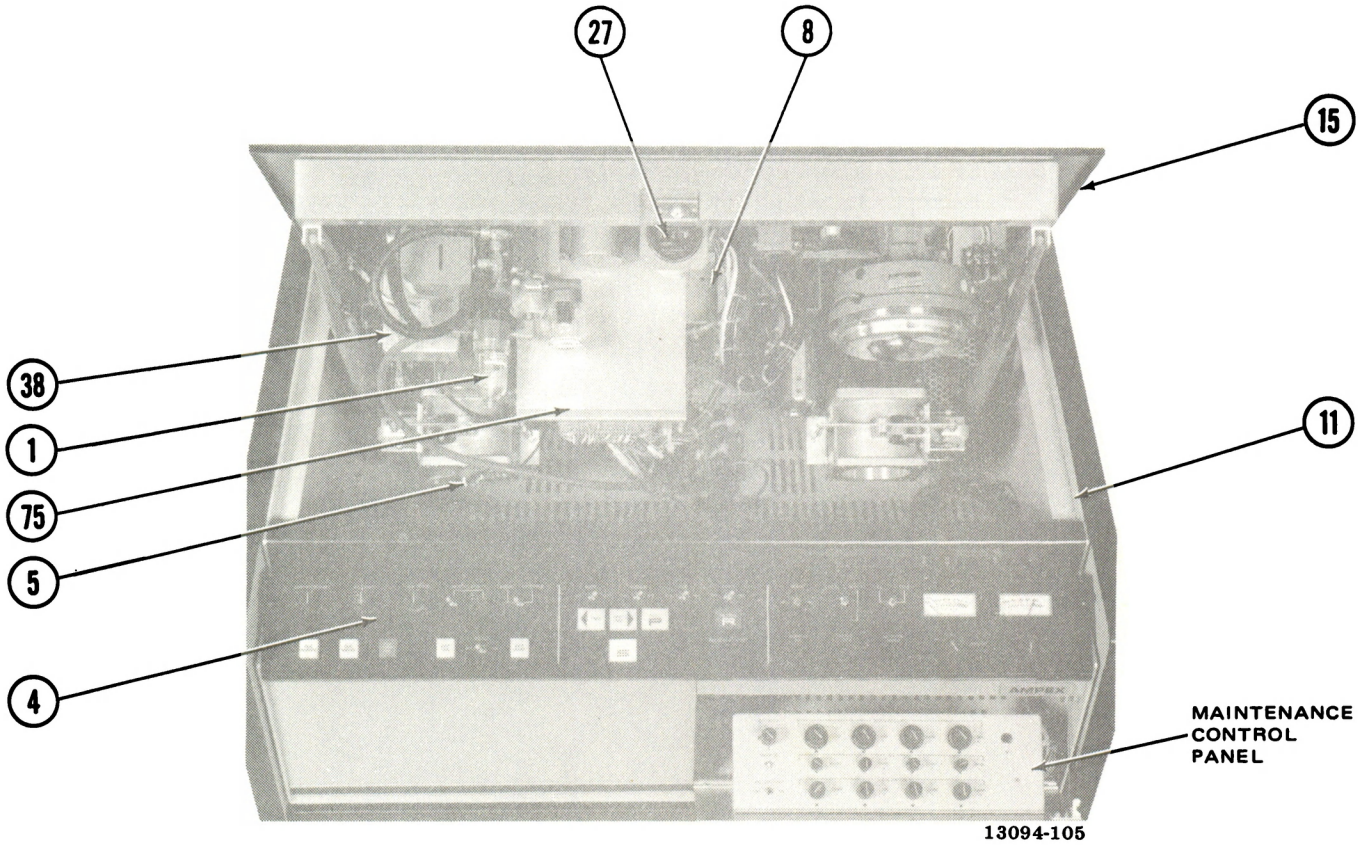

Assembly No. 1373043. Transport Assembly

ITEM NO.	AMPEX PART NO.	REFERENCE NUMBER	DESCRIPTION	JEDEC NO. OR MFR. PART NO.
	1373044-03		TRANSPORT CASE ASSEMBLY (NHA 1373043)	
1	1373190-02		HINGE, ACS DR	
2	1373190-03		HINGE, ACS DR	
4	1373214-01		BLOCK, LCH MTG	
5	1373215-01		BRACKET, PNL SPRT	
6	1373216-01		PANEL, DR, TRANSPORT	
7	1373217-01		PANEL, FR, TRANSPORT	
13	1373238-02		LENS HOUSING ASSEMBLY	
14	7216185-01		PIN, DR PVT	
15	1367325-01		HINGE, RESTRAINT	
17	1373300-01		BRACKET, CABLE TIE	
18	1373302-02		BRACKET, MTG, CONN	
25	311-039		LATCH, TOUCH	
26	250-189		BUMPER, RBR	
28	470-038		SCREW, CAP, NO. 10-32 X 1/2 IN	
29	470-047		SCREW, CAP, NO. 1/4-20 X 3/4 IN	
32	476-505		SCREW, THD FORMING	
33	496-004		NUT, KEP, NO. 4-40	
34	496-005		NUT, KEP, NO. 6-32	
35	496-006		NUT, KEP, NO. 8-32	
37	501-008		WASHER, PLAIN, NO. 4	
38	501-009		WASHER, PLAIN, NO. 6	
39	501-067		WASHER, PLAIN, NO. 1/4 IN	
40	501-205		WASHER, PLAIN, NO. 8	
41	502-005		WASHER, LOCKING, NO. 10	
42	421-361		BEARING, PILLOW BLOCK	
43	470-599		SCREW, SHLDR	
44	280-391		WASHER, SHIM	
45	496-014		NUT, HEX, 3/8-16	
46	470-029		SCREW, CAP, NO. 8-32 X 1/2 LG	
47	503-039		WASHER, PLAIN, 0.315 ID X 0.507 OD X 0.016 THK	
48	440-117		PIPE FITTING, NIP, QIK-CONN, 1/4 EPT	
49	440-228		PIPE FITTING, ADPTR, BHD, 1/4 IPT TO 1/4 IPT	
50	440-146		PIPE FITTING, CPLG, 1/4 EPT, 3/8 TUBE	
51	440-064		PIPE FITTING, ELB, 90°, ST, 1/4 EPT	
52	440-073		PIPE FITTING, NIP, CL, 1/8 EPT	
53	440-108		PIPE FITTING, ELB, 90°, PLAIN, 1/8 IPT	
54	440-195		PIPE FITTING, ADPTR, BHD, 1/8 IPT	
55	440-996		FITTING, HOSE/PIPE, CPLG BARBED INSR, 5/16 ID HOSE	
56	592-347		MUFFLER VACUUM PUMP	
57	302-443		STRAP, ACCESS, MTG	
58	471-078		SCREW, MACH, PAN HD, NO. 8-32 X 0.38 LG	
59	476-326		SCREW, TPG, PAN HD, NO. 6-20 X 0.25 LG	
60	492-032		NUT, HEX, SM PATT, NO. 4-40	
62	502-002		WASHER, SPR LOCK, NO. 4	
63	492-032		NUT, SM PATT, NO. 4-40	J

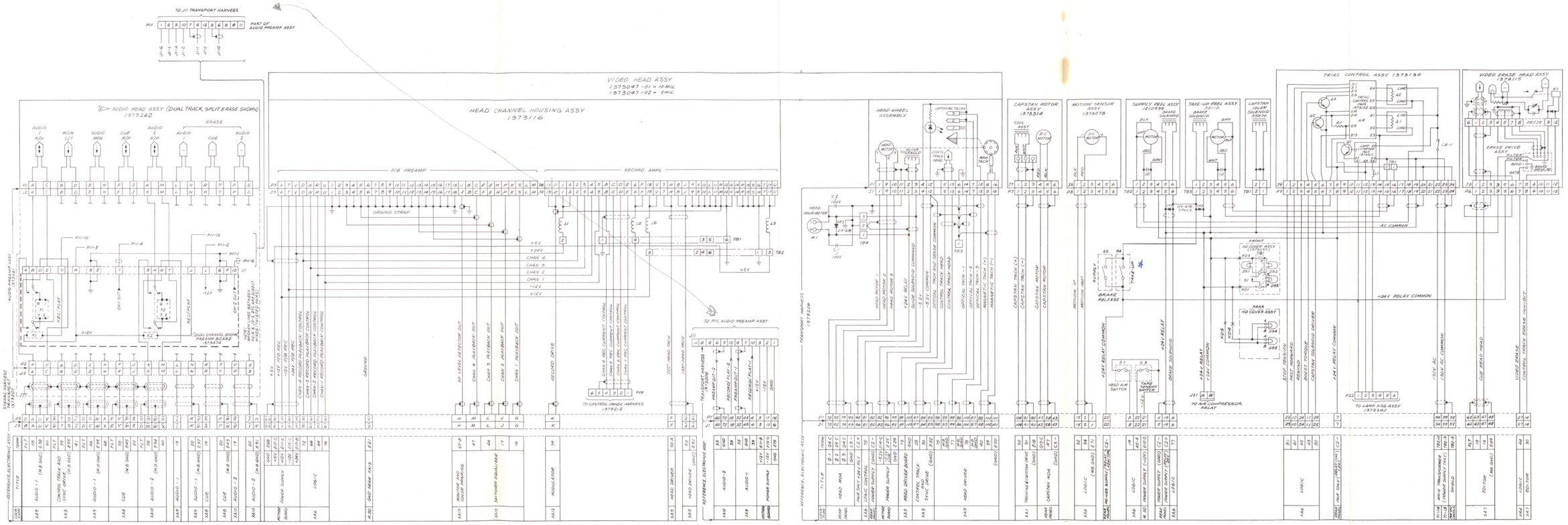

NOTES:
FOR OTHER VERSIONS OF HEAD ASSEMBLIES SEE LM 1375000.

* UTK 1
2 Stripped Junction
WHITE Junction #3

E

Schematic No. 1373363
Tape Transport Assembly Wiring Diagram

ASSEMBLY NO. 1373044 TITLE TRANSPORT CASE ASSEMBLY

ITEM NO.	AMPEX PART NO.	REFERENCE NUMBER	DESCRIPTION	JEDEC NO. OR MFR. PART NO.
64	475-058		SCREW, PAN HD, SEMS, NO. 6-32 X 0.375	
65	302-407		BASE, TIE-WARP, OFFSET	
66	1373192-02		SUPPORT, TOP PLATE	
67	1373472-01		BRACKET, PIVOT	
68	501-030		WASHER, PLAIN, 0.562 OD X 0.328 ID X 0.063 THK	
69	502-129		WASHER, LOCK, INT TOOTH, 5/16	
70	501-070		WASHER, PLAIN, NO. 10	
71	492-011		NUT, PLAIN, HEX, NO. 10-32	
72	107-007		CYLINDER, GAS	
73	1373466-01		PLATE, NUT	
74	1373477-01		LABEL	
75	1374841-01		BLOCK, STOP, TRANSPORT HOUSING	
76	1374842-01		SPACER	
77	250-188		BUMPER	
78	430-004		RING, RTNG	
79	480-139		BOLT, HEX HD, NO. 1/4-20 X 4 IN LG	
80	269-330		STRIP, RBR, PRESS SENS, 0.125 THK X 0.625 WD	
81	470-110		SCREW, CAP, BTN, HEX SOC, NO. 10-32 X 1-1/4 LG	
82	1373225-02		HOUSING, TRANSPORT	
83	502-006		WASHER, SPR, LOCK, 1/4	
				J

SHEET 2 OF 2

ITEM NO.	AMPEX PART NO.	REFERENCE NUMBER	DESCRIPTION	JEDEC NO. OR MFR. PART NO.
	1373238-02		LENS HOUSING ASSEMBLY (NHA 1373044)	
1	1373019-01		FILM, LT CONT	
2	1373019-02		FILM, LT CONT	
5	1373176-01		LENS	
6	1373176-02		LENS	
7	1373177-01		LIGHT DIFFUSER	
8	1373177-02		LIGHT DIFFUSER	
10	1373179-01		RETAINER, LENS	
11	1373179-02		RETAINER, LENS	
12	1373183-01		REFLECTOR	
15	250-188		BUMPER	
16	250-187		BUMPER	
17	476-505		SCREW, NO. 4-40 X 0.250 THD FORMING	
18	496-004		NUT, KEP, NO. 4-40	
19	501-008		WASHER, PLAIN, NO. 4	
20	476-068		SCREW, THD FORMING, NO. 2-56 X 0.188 TYPE F	
21	020-492		RELAY, HLDN, SPR	
22	020-788	K1	RELAY, TIME DLY, THERMO	
23	020-988	K2	RELAY, 24 VDC, COIL	
24	160-020		SHIELD, TUBE	
25	060-500		LAMP, FLUOR	
27	1373426-01		BRACKET, LATCH	
28	492-466		NUT, PLAIN, HEX, FNSHD, NO. 2-52	
29	502-001		WASHER, LOCK, SPR, NO. 2	
30	497-156		NUT, SHEET SPRING, "U", NO. 6-32	
31	475-085		SCREW, MACH, SEMS, NO. 6-32 X 0.31 LG	
				C

SHEET 1 OF 1

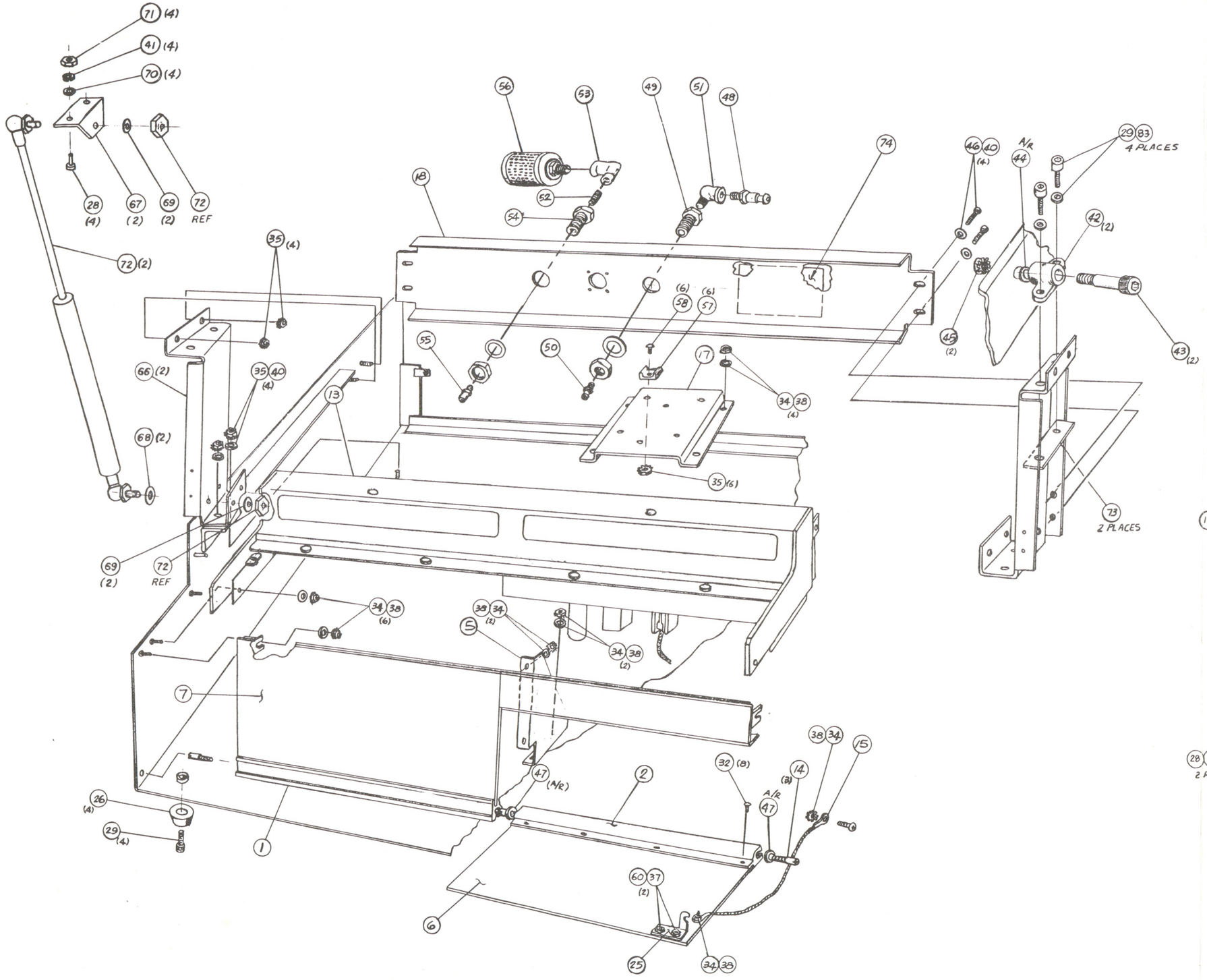

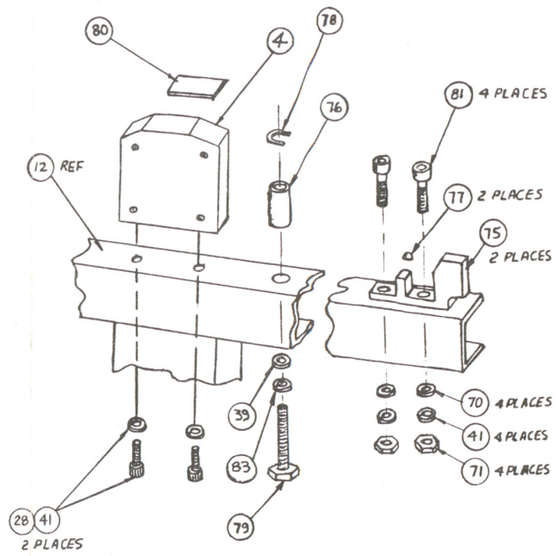

Assembly No. 1373044.
Transport Case Assembly

ITEM NO.	AMPEX PART NO.	REFERENCE NUMBER	DESCRIPTION	JEDEC NO. OR MFR. PART NO.
	1373045-03		TRANSPORT TOP PLATE ASSEMBLY (NHA 1373043)	
1	13870-01		CAPSTAN IDLER HOUSING ASSEMBLY	
2	50002-05		GUARD, REEL	
3	50115-01		SLEEVE, BUMPER	
4	50116-01		STOP, TAPE TENSION ARM	
6	1208233-02		TAPE TENSION ARM ASSEMBLY	
7	1208242-02		BUTTON, PLUG, TENSION ARM	
10	1373105-01		OVERLAY, TOP PLATE	
11	1365625-01		CAPSTAN IDLER ARM ASSY	
13	52110-06		TAKEUP REEL ASSY	
14	55670-06		CAPSTAN SOLENOID ASSY	
15	1210939-60		SUPPLY REEL ASSY	
17	1373352-01		TENSION ARM HOUSING ASSY (SUPPLY)	
19	4030328-14		CAPSTAN DRIVE ASSY	
20	1373353-01		TENSION ARM HOUSING ASSY (TAKEUP)	
21	280-754		SPACER, UNTHREADED, 0.257 ID X 0.500 OD X 0.125 LG	
22	470-021		SCREW, CAP, HEX SOC, NO. 6-32 X 5/8 LG	
23	470-022		SCREW, CAP, HEX SOC, NO. 6-32 X 3/4 LG	
24	470-039		SCREW, CAP, HEX SOC, NO. 10-32 X 5/8 LG	
25	470-046		SCREW, CAP, HEX SOC, NO. 1/4-20 X 5/8 LG	
26	470-103		SCREW, CAP, HEX SOC, NO. 10-24 X 5/8 LG	
27	470-386		SCREW, CAP, HEX SOC, LH, NO. 10-32 X 5/8 LG	
28	473-002		SCREW, FLAT HD, XREC, NO. 6-32 X 1-1/8	
29	501-009		WASHER, FLAT, NO. 6	
30	501-011		WASHER, FLAT, NO. 10	
31	501-025		WASHER, FLAT, NO. 1/4	
32	502-003		WASHER, LOCK, SPLIT, NO. 6	
33	502-005		WASHER, LOCK, SPLIT, NO. 10	
34	502-006		WASHER, LOCK, SPLIT, NO. 1/4	
35	501-045		WASHER, FLAT, SHIM, 0.328 ID X 0.484 OD X 0.005	
36	501-052		WASHER, FLAT, SHIM, 0.328 ID X 0.484 OD X 0.003	
37	501-059		WASHER, FLAT, SHIM, 0.328 ID X 0.484 OD X 0.010	
38	470-048		SCREW, CAP, HEX SOC, NO. 1/4-20 X 7/8 LG	
42	1374843-01		BRACKET, HLDN	
43	1374845-01		NUT, PLATE	
				K

SHEET 1 OF 1

ITEM NO.	AMPEX PART NO.	REFERENCE NUMBER	DESCRIPTION	JEDEC NO. OR MFR. PART NO.
	13870-01		CAPSTAN IDLER HOUSING ASSEMBLY (NHA 1373045)	
1	13871-02		ARM, SOLENOID	
2	13872-01		SHAFT	
3	14563-01		HOUSING	
4	406-030		ROLLPIN, 1/8 OD X 5/8 LG	
5	1648340-02		BEARING, BALL	
6	430-006		RING, RTNG, EXT FLAT	
7	501-045		WASHER, SHIM, 0.005 THK	
8	501-052		WASHER, SHIM, 0.003 THK	
				G

SHEET 1 OF 1

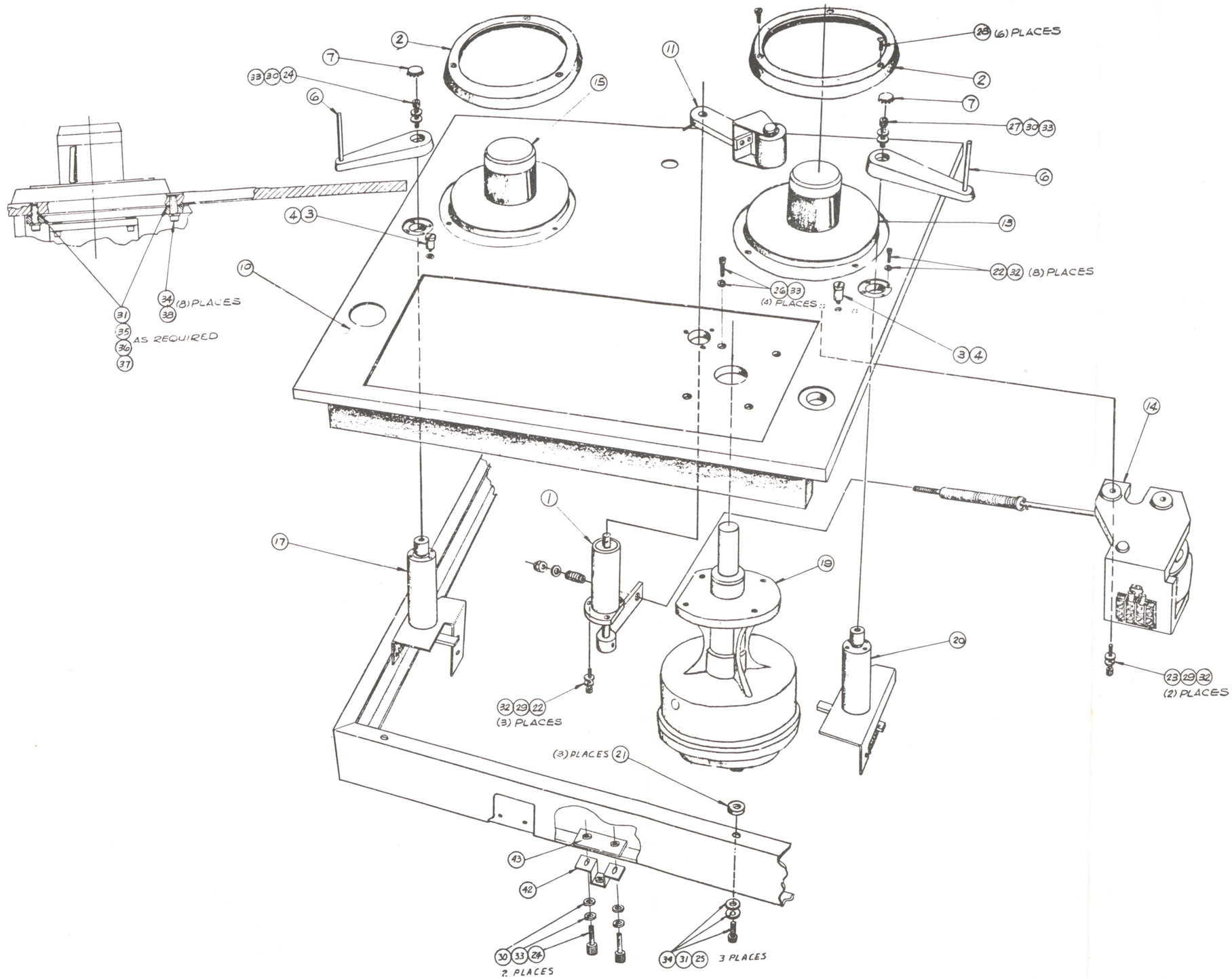

Assembly No. 1373045.
Transport Top Plate Assembly

ITEM NO.	AMPEX PART NO.	REFERENCE NUMBER	DESCRIPTION	JEDEC NO. OR MFR. PART NO.
	1365625-01		CAPSTAN IDLER ARM ASSEMBLY (NHA 1373045)	
1	1365626-01		ROLLER, PINCH	
2	13864-01		ARM, HOUSING	
3	13865-01		SHAFT	
4	13866-05		BRACKET	
5	13867-02		CAP	
6	13868-03		PLATE	
7	13869-01		SPACER	
8	164834-030		BEARING, BALL	
10	352-008		WASHER, WAVY, SPR	
12	406-032		ROLL PIN, 1/8 OD X 1 LG	
14	430-006		RING, RTNG	
15	430-027		RING, RTNG	
17	470-008		SCREW, SOC HD, CAP, NO. 4-40 X 1/4 LG	
				—

SHEET 1 OF 1

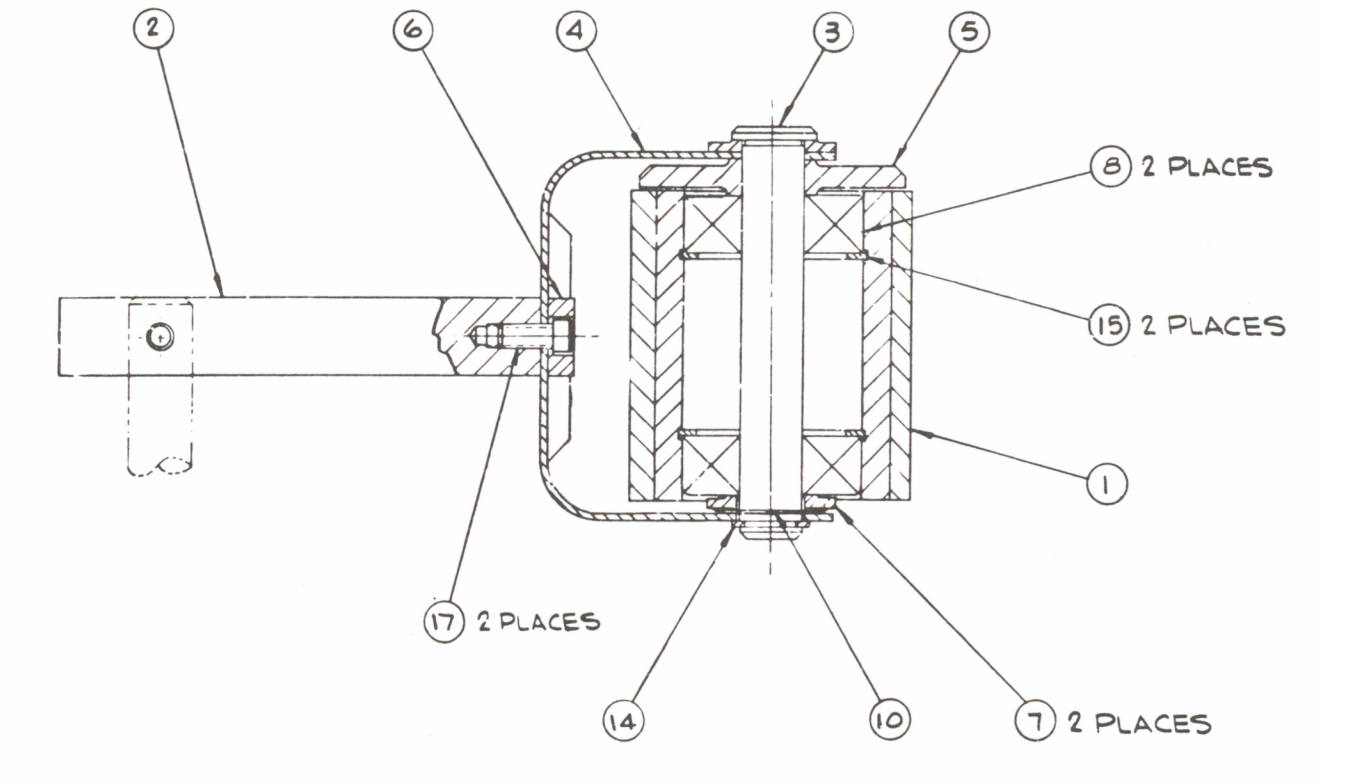

ITEM NO.	AMPEX PART NO.	REFERENCE NUMBER	DESCRIPTION	JEDEC NO. OR MFR. PART NO.
	52110-06		TAKEUP REEL ASSEMBLY (NHA 1373045)	
1	13952-01		BRACKET ASSY	
3	13958-01		PLATE, BRAKE SPR	
4	13959-02		LEVER, BRAKE	
5	13961-03		FLANGE, MOTOR	
8	13964-01		PAD, TURNTABLE	
9	13966-02		DRUM, BRAKE	
10	13968-01		LINK, SOLENOID	
11	14331-01		BRAKE BAND ASSY	
12	14349-01		MOTOR, TORQUE	
14	14418-08		HOUSING, BRAKE	
15	14585-04		STOP, SOLENOID	
16	50236-02		GUARD, TERM, STRIP	
17	50630-01		PIN, BRAKE LOOP	
18	50630-02		PIN, BRAKE LOOP	
22	52172-01		SPRING, BRAKE ADJ	
23	52173-01		PIN, LINK	
24	52173-02		PIN, LINK	
25	52174-01		BOLT, EYE	
26	1373102-01		KNOB TURNTABLE ASSY	
28	171-001		CONNECTOR, SOLDERLESS	
29	171-009		CONNECTOR, SOLDERLESS	
30	302-007		CLAMP, CABLE, 1/4 ID PLASTIC	
31	400-009		PIN, CLEVIS, 1/8 DIA X 17/32 LG	
32	401-007		PIN, COTTER, 1/16 DIA X 1/2 LG	
33	406-012		PIN, ROLL PIN, 0.094 DIA X 1 LG	
34	430-004		RING, RTNG	
35	470-029		SCREW, CAP, NO. 8-32 X 1/2 LG	
36	470-037		SCREW, CAP, NO. 10-32 X 7/16 LG	
37	470-040		SCREW, CAP, NO. 10-32 X 3/4 LG	
38	470-039		SCREW, CAP, NO. 10-32 X 5/8 LG	
40	471-563		SCREW, MACH, NO. 6-32 X 3/16 LG	
41	475-038		SCREW, SEM, NO. 8-32 X 5/16 LG	
42	477-067		SCREW, SET, NO. 8-32 X 1/4 LG	
43	493-008		NUT, SELF LOCKING, NO. 10-32	
44	493-009		NUT, SELF LOCKING, NO. 6-32	
45	501-010		WASHER, FLAT, NO. 8	
46	501-011		WASHER, FLAT, NO. 10	
47	501-054		WASHER, SHIM, 0.005 THK	
48	501-064		WASHER, SHIM, 0.003 THK	
49	502-004		WASHER, LOCK, SPR, NO. 8	
50	13954-02		SOLENOID ASSY	
52	502-005		WASHER, LOCK, SPR, NO. 10	
				R

SHEET 1 OF 1

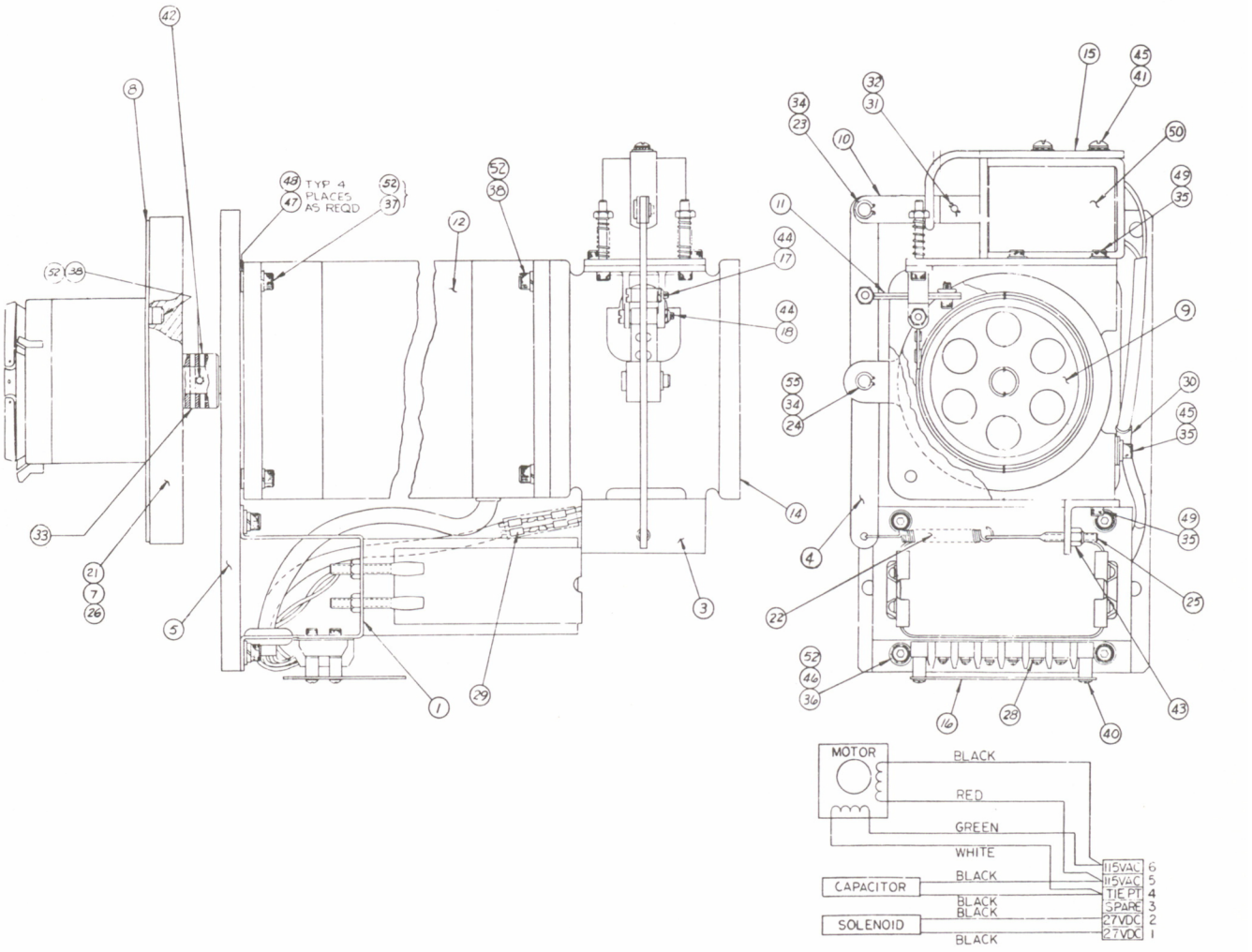

Assembly No. 52110. Takeup Reel Assembly

ITEM NO.	AMPEX PART NO.	REFERENCE NUMBER	DESCRIPTION	JEDEC NO. OR MFR. PART NO.
	13954-02		SOLENOID ASSEMBLY (NHA 52110-06)	
1	13817-01		SPRING	
2	13955-01		BRACKET, BRAKE LIMIT	
3	13957-02		PLATE, SOLENOID BASE	
4	14415-01		SOLENOID	
6	470-124		SCREW, CAP, NO. 8-32 X 1-1/2 LG	
7	475-038		SCREW, SEM, NO. 8-32 X 5/16 LG	
8	493-007		NUT, SELF LOCKING, NO. 8-32	
10	503-030		WASHER, NYLON, 1/4 ID X 1/2 OD X 1/32 THK	
				E

SHEET 1 OF 1

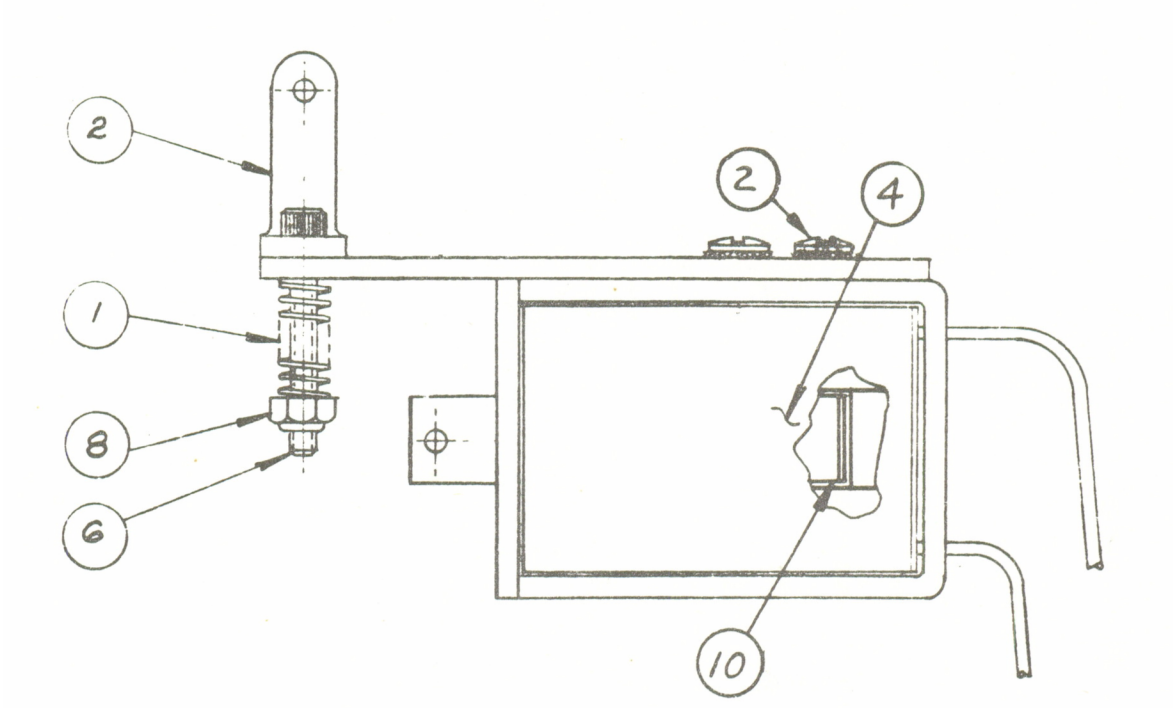

ITEM NO.	AMPEX PART NO.	REFERENCE NUMBER	DESCRIPTION	JEDEC NO. OR MFR. PART NO.
	1373102-01		KNOB TURNTABLE ASSEMBLY (NHA 52110)	
1	13962-02		TURNTABLE, SUPPLY AND TAKEUP REEL	
2	1373099-01		CAP, REEL HLDN	
3	1373100-01		HUB, REEL HLDN	
4	1373101-01		SPRING, REEL HLDN	
7	470-039		SCREW, CAP, HEX SOC, NO. 10-32 X 0.625 LG	
8	477-478		SCREW, SET, HEX SOC, NO. 8-32 X 0.375 LG	
10	502-005		WASHER, LOCK SPR, NO. 10	
	136517-02		SPRING, REEL DRIVE	
				—

SHEET 1 OF 1

ITEM NO.	AMPEX PART NO.	REFERENCE NUMBER	DESCRIPTION	JEDEC NO. OR MFR. PART NO.
	13952-01		BRACKET ASSEMBLY (NHA 52110-06)	
2	280-016		SPACER, NO. 6-32 THD, 1/4 OD X 3/8 LG	
3	180-058		TERMINAL STRIP, 6 TERM	
4	036-138		CAPACITOR	
5	260-007		GROMMET, 7/16 ID X 15/16 OD X 5/16 THK	
6	470-021		SCREW, HEX SOC, HD, NO. 6-32 X 5/8 LG	
7	496-003		NUT, KEP, NO. 10-32	
8	501-011		WASHER, FLAT, NO. 10	
9	065-010		BRACKET, CONDENSER MTG	E

SHEET 1 OF 1

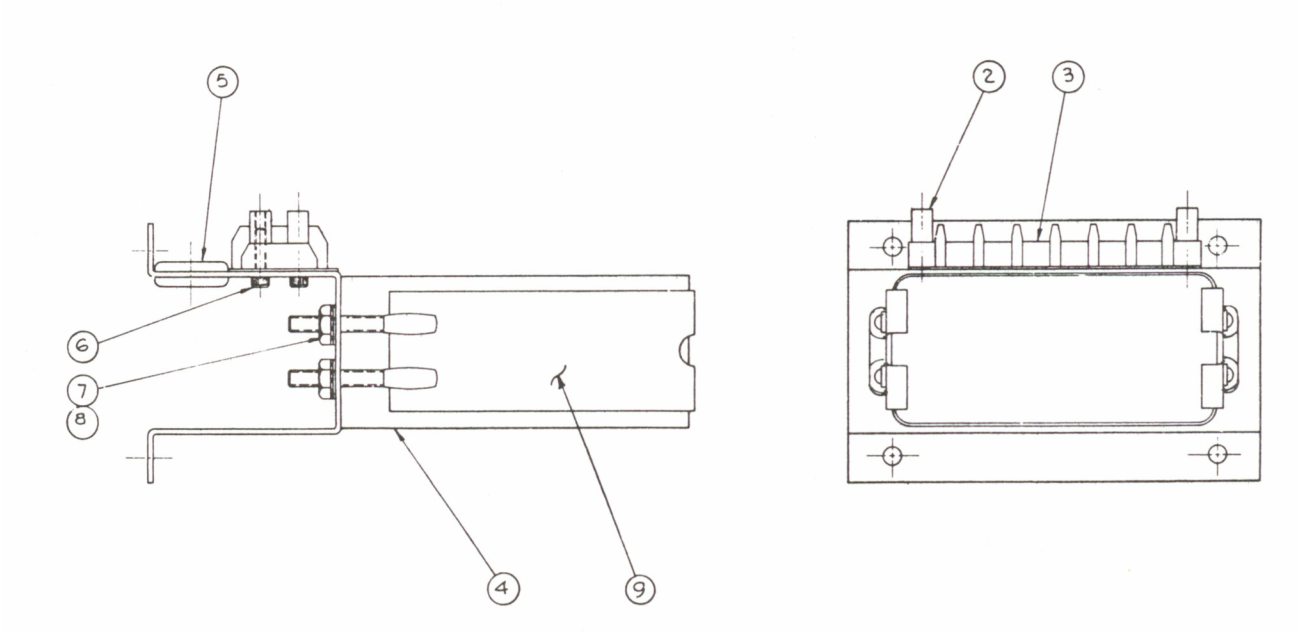

ITEM NO.	AMPEX PART NO.	REFERENCE NUMBER	DESCRIPTION	JEDEC NO. OR MFR. PART NO.
	1210939-60		SUPPLY REEL ASSEMBLY (NHA 1373045)	
1	13952-01		BRACKET, ASSY	
3	13958-01		PLATE, BRAKE SPR	
4	13959-02		LEVER, BRAKE	
5	13961-03		FLANGE, MOTOR	
8	13964-01		PAD, TURNTABLE	
9	13966-02		DRUM, BRAKE	
10	13968-01		LINK, SOLENOID	
11	14331-01		BRAKE BAND ASSY	
12	14349-01		MOTOR, TORQUE	
14	14418-08		HOUSING, BRAKE	
15	14585-04		STOP SOLENOID	
16	50236-02		GUARD, TERM STRIP	
17	50630-01		PIN, BRAKE LOOP	
18	50630-02		PIN, BRAKE LOOP	
22	52172-01		SPRING, BRAKE ADJ	
23	52173-01		PIN, LINK	
24	52173-02		PIN, LINK	
25	52174-01		BOLT, EYE	
26	1373102-01		KNOB TURNTABLE ASSY	
28	171-001		CONNECTOR, SOLDERLESS	
29	171-009		CONNECTOR, SOLDERLESS	
30	302-007		CLAMP, CABLE, 1/4 ID	
31	400-009		PIN, CLEVIS, 1/8 DIA X 17/32 LG	
32	401-007		PIN, COTTER, 1/16 DIA X 1/2 LG	
33	406-012		PIN, ROLL, 0.094 DIA X 1 LG	
34	430-004		RING, RTNG	
35	470-029		SCREW, CAP, NO. 8-32 X 1/2 LG	
36	470-037		SCREW, CAP, NO. 10-32 X 7/16 LG	
37	470-040		SCREW, CAP, NO. 10-32 X 3/4 LG	
38	470-039		SCREW, CAP, NO. 10-32 X 5/8 LG	
40	471-563		SCREW, MACH, NO. 6-32 X 3/16 LG	
41	475-038		SCREW, SEM, NO. 8-32 X 5/16 LG	
42	477-067		SCREW, SET, NO. 8-32 X 1/4 LG	
43	493-008		NUT, SELF LOCKING, NO. 10-32	
44	493-009		NUT, SELF LOCKING, NO. 6-32	
45	501-010		WASHER, FLAT, NO. 8	
46	501-011		WASHER, FLAT, NO. 10	
47	501-054		WASHER, SHIM, 0.005 THK	
48	501-064		WASHER, SHIM, 0.003 THK	
49	502-004		WASHER, LOCK, NO. 8	
50	13954-02		SOLENOID ASSY	
52	502-005		WASHER, LOCK, NO. 10	
				N

SHEET 1 OF 1

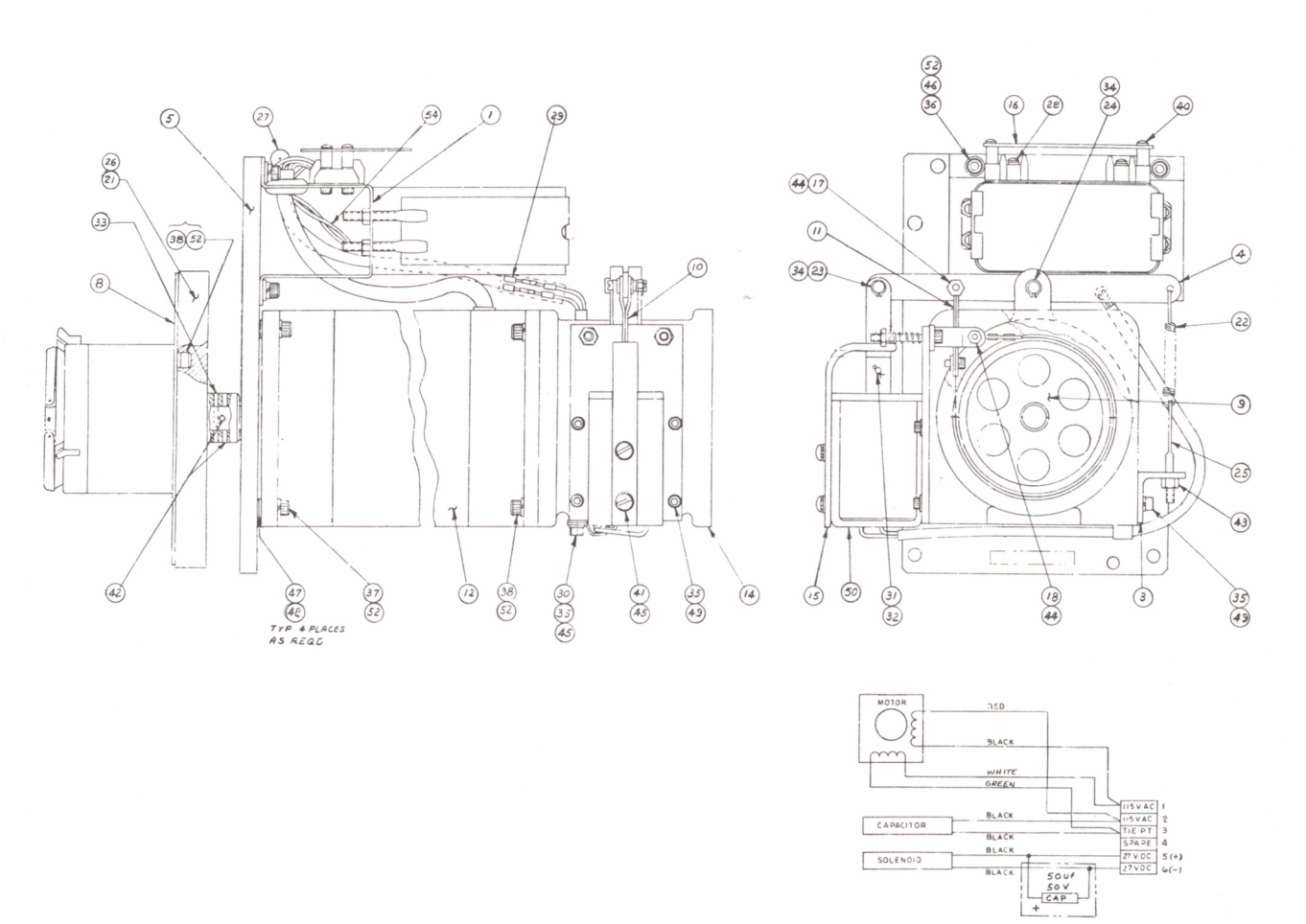

Assembly No. 1210939. Supply Reel Assembly

ITEM NO.	AMPEX PART NO.	REFERENCE NUMBER	DESCRIPTION	JEDEC NO. OR MFR. PART NO.
	1373353-01		TENSION ARM HOUSING ASSEMBLY (TAKEUP) (NHA 1373045)	
1	1211347-10		LEVER, TENSION ARM	
2	1373345-01		BUSHING ASSY, TENSION ARM HOUSING	
4	1373347-01		SPRING, EXT, TAPE TENSION ARM	
5	1373349-01		BRACKET, SWITCH AND SPRING MTG	
12	420-104		BEARING, BALL, 3/8 BORE, 7/8 OD	
13	430-029		RING, RTNG, INT, 7/8 HOUSING	
14	430-467		RING, RTNG, EXT, GRIP, 3/8	
15	470-018		SCREW, CAP, HEX SOC DR, NO. 6–32 X 3/8 LG	
16	470-027		SCREW, CAP, HEX SOC DR, NO. 8–32 X 3/8 LG	
17	501-205		WASHER, PLAIN, NO. 8	
18	502-003		WASHER, LOCK, SPLIT, NO. 6	
19	502-004		WASHER, LOCK, SPLIT, NO. 8	
				C

SHEET 1 OF 1

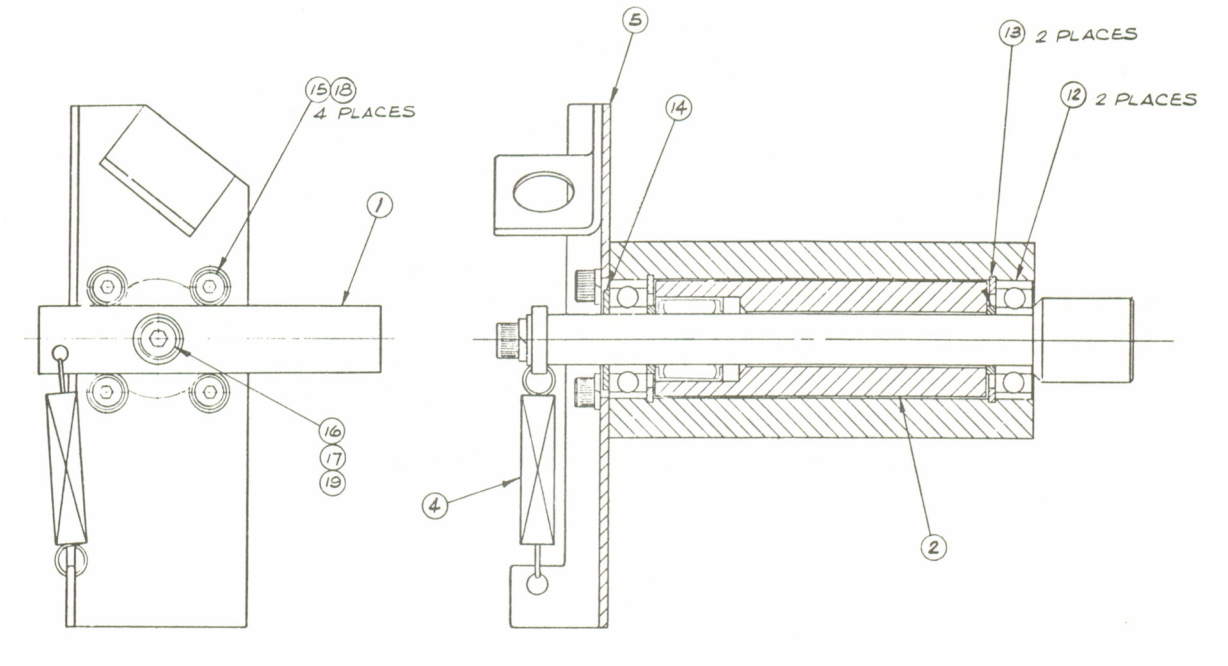

ITEM NO.	AMPEX PART NO.	REFERENCE NUMBER	DESCRIPTION	JEDEC NO. OR MFR. PART NO.
	1373352-01		TENSION ARM HOUSING ASSEMBLY (SUPPLY) (NHA 1373045)	
1	1211347-10		LEVER, TENSION ARM	
2	1373345-02		BUSHING ASSY, TENSION ARM HOUSING	
4	1373347-01		SPRING, EXT, TAPE TENSION ARM	
5	1373348-01		BRACKET, SWITCH AND SPRING MTG	
12	420-104		BEARING, BALL, 3/8 BORE, 7/8 OD	
13	430-029		RING, RTNG, INT, 7/8 HOUSING	
14	430-467		RING, RTNG, EXT, GRIP 3/8	
15	470-018		SCREW, CAP, HEX SOC DR, NO. 6–32 X 3/8 LG	
16	470-027		SCREW, CAP, HEX SOC DR, NO. 8–32 X 3/8 LG	
17	501-205		WASHER, PLAIN, NO. 8	
18	502-003		WASHER, LOCK, SPLIT, NO. 6	
19	502-004		WASHER, LOCK, SPLIT, NO. 8	
				C

SHEET 1 OF 1

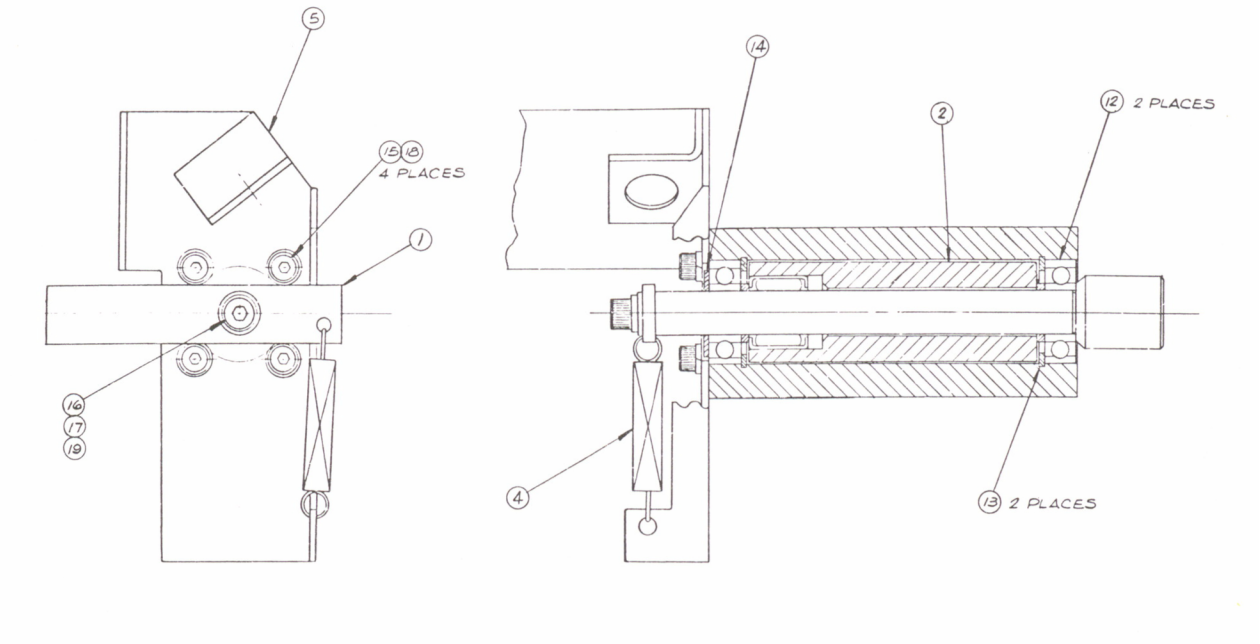

ITEM NO.	AMPEX PART NO.	REFERENCE NUMBER	DESCRIPTION	JEDEC NO. OR MFR. PART NO.
	59102-09		TAPE TIMER ASSEMBLY, 60 CYCLES (NHA 1373045)	
	59102-10		TAPE TIMER ASSEMBLY, 50 CYCLES (NHA 1373045)	
1	6000035-01		LABEL, IDENTIFICATION	
2	51305-01		IDLER SUBASSEMBLY (60 CY VERSION)	
4	51307-02		SLEEVE, SPACING	
5	51309-01		BOSS, MTG	
6	51310-01		COUNTER REQUIREMENTS	
7	51315-02		GEAR SHAFT ASSEMBLY	
8	51316-01		GEAR, COUNTER	
9	51317-01		GEAR, FINE SETTING	
10	51318-01		SLEEVE, FINE SETTING GEAR	
11	51319-01		SHAFT, FINE SETTING GEAR	
12	51320-01		SPRING, FINE SETTING GEAR	
13	51321-01		KNOB, FINE SETTING	
14	51322-01		KNOB, RESET	
16	51324-01		WASHER, HOLDDOWN	
18	51305-02		IDLER, SUBASSY, (50 CY VERSION)	
19	52297-01		WORM, PRECISION	
20	52335-01		COVER, DUST	
21	164834-02		BEARING, BALL	
22	430-027		RING, RETAINING-INTERNAL FLAT	
23	430-060		RING, RETAINING-INTERNAL BOWED	
24	470-014		SCREW, CAP, NO. 4-40 NC-2A X 3/4 LG	
25	470-047		SCREW, CAP, NO. 1/4-20 UNC-2A X 0.750 LG	
26	471-054		SCREW, MACHINE, NO. 2-56 NC-2A X 1/4	
27	471-061		SCREW, MACHINE, NO. 4-40 NC-2A X 5/16	
28	471-327		SCREW, MACHINE, NO. 4-40 NC-2A X 0.312 LG	
29	477-032		SCREW, SET, NO. 4-40 NC-2A X 5/16 LG	
30	477-038		SCREW, SET, NO. 6-32 NC-2A X 7/16 LG	
32	477-760		SCREW, SET, NO. 6-32 NC-2A X 1/8 LG	
33	477-122		SCREW, SET, NO. 4-40 X 1/8 LG	
34	501-008		WASHER, FLAT, NO. 4	
35	501-011		WASHER, FLAT, NO. 10	
36	501-012		WASHER, FLAT, 1/4	
37	501-071		WASHER, FLAT, 3/8	
39	502-023		WASHER, LOCK, NO.2	
45	502-006		WASHER, SPRING LOCK, NO. 0.250	
49	51323-04		BUTTON, PLUG	
50	51325-05		SHIELD, IDLER	
51	51302-06		BASE	
				W

SHEET 1 OF 1

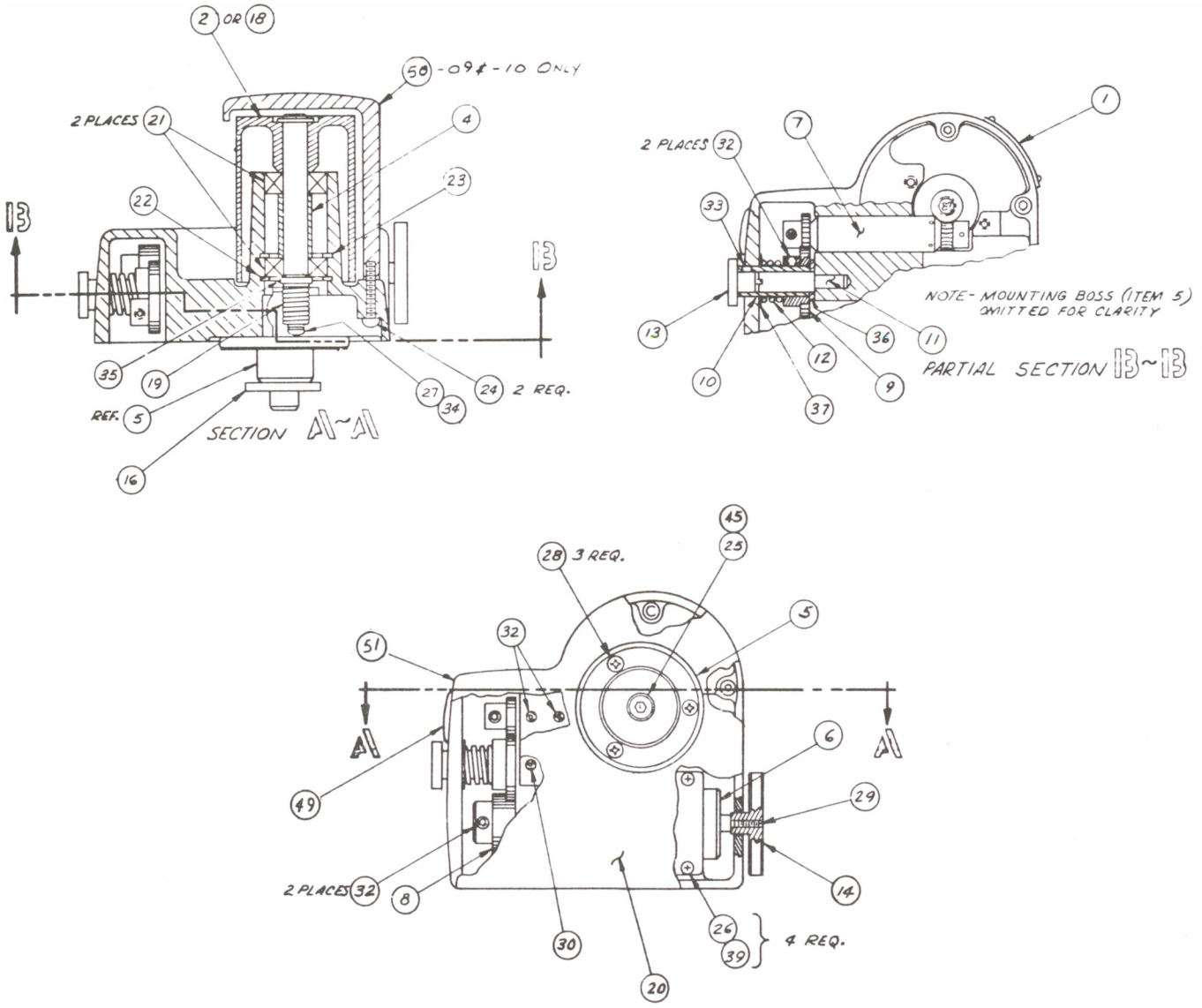

Assembly No. 59102. Tape Timer Assembly, 50 and 60 Cycles

ITEM NO.	AMPEX PART NO.	REFERENCE NUMBER	DESCRIPTION	JEDEC NO. OR MFR. PART NO.
	55670-06		**CAPSTAN SOLENOID ASSEMBLY (NHA 1373045)**	
1	55337-01		SPRING, RETURN SOLENOID	
3	55572-01		DRAW BAR	
4	55573-01		DRAW PIN	
7	55673-02		BRACKET, SOLENOID MTG	
10	69518-10		SPRING, ADJUSTING	
12	1380008-02		SOLENOID	
17	171-001		CONNECTOR, SOLDERLESS, SLOTTED TONGUE	
18	180-075		STRIP TERMINAL, BARRIER, 2 TERM	
19	171-009		CONNECTOR, SOLDERLESS, DISCONNECT KNIFE	
20	401-004		PIN COTTER, 1/16 DIA X 3/8 LONG	
21	471-497		SCREW, MACH, BINDER HD, STD, NO. 6-32 X 5/8	
22	492-011		NUT, HEX, NO. 10-32	
24	470-022		SCREW, CAP, HEX SOC, HD, NO. 6-32 X 3/4 LG	
25	501-004		WASHER, FLAT, NO. 8 X 0.032 THK	
26	501-011		WASHER, FLAT, NO. 10	
27	501-009		WASHER, FLAT, NO. 6, 0.036 THK	
29	502-003		WASHER, LOCK, SPRING, NO. 6	
31	493-008		NUT, ELASTIC, STOP, NO. 10	
37	013-678	CR1	DIODE, RECTIFIER, 600V	1N4385
				S

SHEET 1 OF 1

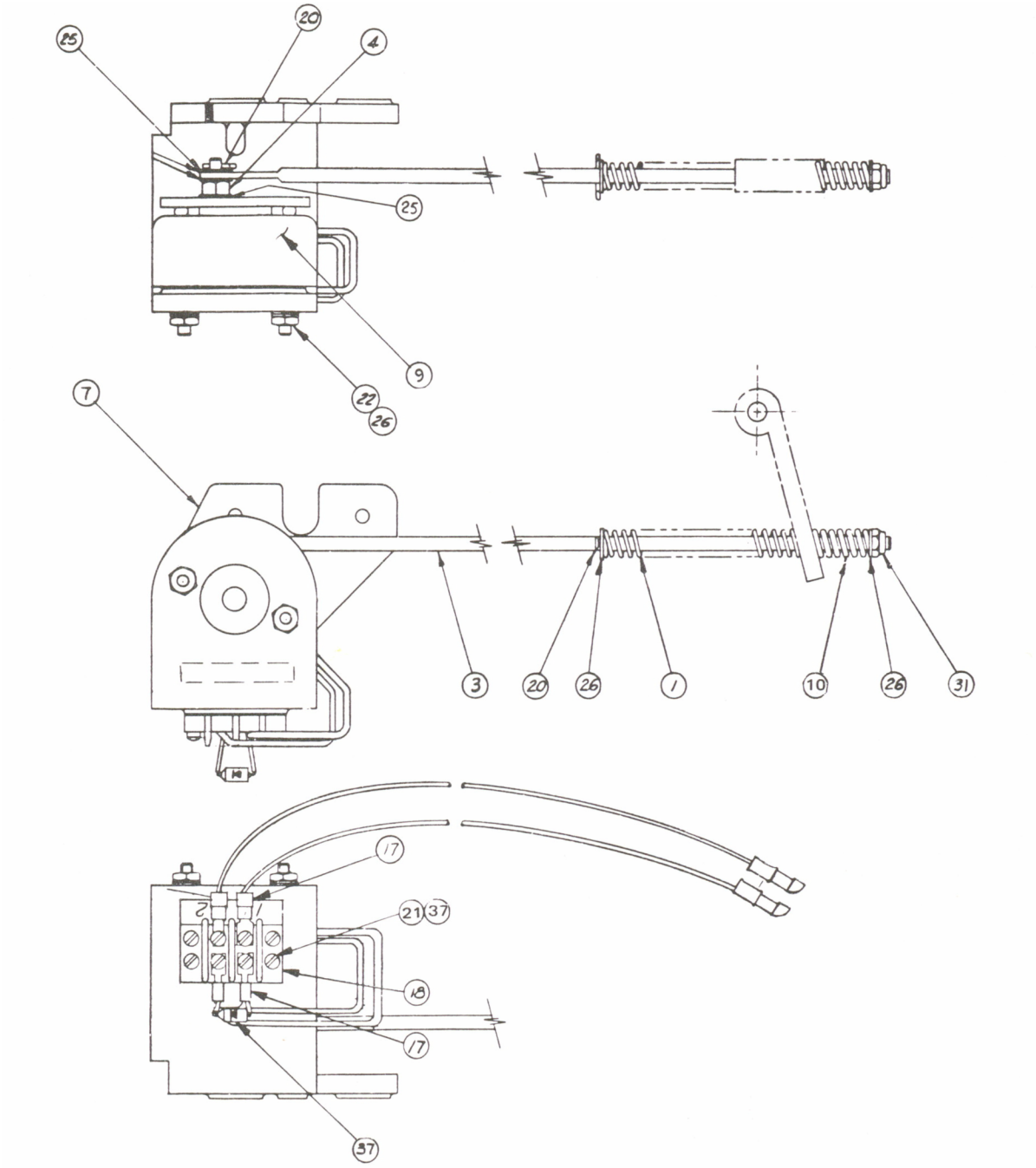

Assembly No. 55670. Capstan Solenoid Assembly

ITEM NO.	AMPEX PART NO.	REFERENCE NUMBER	DESCRIPTION	JEDEC NO. OR MFR. PART NO.
	1373206-04		TRANSPORT HARNESS ASSEMBLY (NHA 1373043)	
2	1371197-01		HOOD, CONN, REF: P1	
3	1371198-01		HOOD, CONN, REF: P1	
5	1373205-01		PLATE, CONN, REF: J1	
7	013-678	CR1,2,3	DIODE	1N4385
9	030-963	C1,2	CAPACITOR, 0.1 UF, 100V	
11	120-062	S3	SWITCH, SPDT, 20 AMP	
12	120-074	S2,4	SWITCH, PB, DPST	
14	146-434	J1	CONNECTOR, RECPT, 16 PIN, FEM	
15	166-224		CONTACT, SOC, NO. 24-26 AWG, REF: J11	
16	166-199		CONTACT, SOC, NO. 20-22 AWG, REF: J11,P3,22	
17	166-200		CONTACT, PIN, NO. 20-22 AWG	
18	166-225		CONTACT, SOC, NO. 16-18 AWG, REF: P9, J11	
19	166-226		CONTACT, PIN, NO. 24-26 AWG	
20	166-227		CONTACT, PIN, NO. 16-18 AWG	
22	167-022	P7,8,22	CONNECTOR, PLUG, 6 POS	
23	167-024	P6	CONNECTOR, PLUG, 12 POS	
24	167-026	P9	CONNECTOR, PLUG, 24 POS	
25	167-025	J11	CONNECTOR, RECPT, 12 POS	
26	169-815	P1	CONNECTOR, PLUG, 104 POS	
27	143-009	J21	CONNECTOR, RECPT, 2 POS	
28	172-210		TERMINAL LUG, CRIMP, SPADE	
30	180-248	TB4	TERMINAL STRIP, 3 LUG (NEAR J1)	
31	180-026	TB5	TERMINAL STRIP, 1 LUG	
33	185-009	TB2	TERMINAL STRIP, FANNING, 6 TERM	
34	185-010	TB3	TERMINAL STRIP, FANNING, 6 TERM	
35	185-139	TB1	TERMINAL STRIP, FANNING, 2 TERM	
39	471-062	J1	SCREW, PAN HD, XREC, NO. 4-40 X 0.375 LG	
41	473-324	P1	SCREW, PAN HD, SEM, XREC, NO. 4-40 X 0.250 LG	
43	496-004	J1	NUT, KEP, NO. 4-40	
61	171-238	M1	TERMINAL, QIK DISC, FEM	
62	171-984	KD1,3	TERMINAL, KNIFE DISC	
63	171-009	KD4,5	TERMINAL, KNIFE DISC	

G

SHEET 1 OF 1

ITEM NO.	AMPEX PART NO.	REFERENCE NUMBER	DESCRIPTION	JEDEC NO. OR MFR. PART NO.
	1373207-03		SIGNAL HARNESS ASSEMBLY (NHA 1373043)	
1	1373204-02		BRACKET, CONN	
2	1373281-01		STRAP, GND	
5	139-663	J2	CONNECTOR, RECPT, 18 POS RECT	
6	146-448	J3,4	CONNECTOR, 18 POS DUAL, PC	
8	166-199		CONTACT, SOC, NO. 20–22 AWG, REF: P3	
9	166-200		CONTACT, PIN, NO. 20–22 AWG, REF: P10	
10	166-224		CONTACT, SOC, NO. 24–26 AWG, REF: P3	
11	166-225		CONTACT, SOC, NO. 16–18 AWG, REF: P3	
12	166-227		CONTACT, PIN, NO. 16–18 AWG, REF: P10	
14	167-022	P10	CONNECTOR, PLUG, 6 POS	
15	167-035	P3	CONNECTOR, PLUG, 48 POS	
16	1373486-01		PLATE, MTG, CONN	
17	169-648	P3	CONTACT, COAX	
18	172-001		LUG, TERM, NO. 8, SOLDER, REF: J2	
21	471-077		SCREW, PAN HD, NO. 8–32 X 0.312 LG	
23	496-006		NUT, HEX, KEP, NO. 8–32	
39	473-326		SCREW, PAN HD, XREC, NO. 4–40 X 0.375 LG	
40	471-060		SCREW, PAN HD, XREC, NO. 4–40 X 0.250 LG	
41	496-004		NUT, KEP, NO. 4–40	
42	051-306	L1,2,5,6	INDUCTOR, 39 UH, ±5%	
44	180-923	TB1,2	TERMINAL STRIP, 6 LUGS	
46	302-125		CLAMP, CABLE	
47	472-113		SCREW, XREC, PAN HD, NO. 2–56 X 0.250 LG	
48	475-058		SCREW, SEM, XREC, PAN HD, NO. 6–32 X 0.375 LG	
49	492-007		NUT, NO. 2–56	
50	502-023		WASHER, LOCK, NO. 2	
51	506-013		WASHER, "D", NO. 6	
				G

SHEET 1 OF 1

ITEM NO.	AMPEX PART NO.	REFERENCE NUMBER	DESCRIPTION	JEDEC NO. OR MFR. PART NO.
	1373078-01		MOTION SENSOR ASSEMBLY (NHA 1373043)	
1	1373076		ARM ASSY, SNSR DR	
2	1373077		BRACKET, MOT MTG	
4	166-199		CONTACT, SOC, NO. 20-22 AWG	
5	167-023	J8	CONNECTOR, RECPT, 6 POS	
7	302-058		CLAMP, CA, 1/8 IN	
8	496-005		NUT, LKG, ASSEM WASH, NO. 6-32	
9	471-059		SCREW, PAN HD, NO. 4-40 X 0.188 LG	
10	471-069		SCREW, PAN HD, NO. 6-32 X 0.375 LG	
11	477-485		SCREW, SET, CUP PT, NO. 2-56 X 0.125 LG	
12	502-002		WASHER, SPLIT LOCK, NO. 4-40	
13	506-013		WASHER, "D", NO. 6-32	
15	592-386		MOTOR, 24V	
				A

SHEET 1 OF 1

ITEM NO.	AMPEX PART NO.	REFERENCE NUMBER	DESCRIPTION	JEDEC NO. OR MFR. PART NO.
	1373031-01		PNEUMATIC ASSEMBLY (NHA 1373043)	
2	1367331-01		AUTO SHUT-OFF VALVE ASSEMBLY	
3	1370335-01		TRANSDUCER, VAC	
4	1373032-01		MANIFOLD	
5	1367332-01		DRAIN, FILTER ASSY	
8	090-999		GAUGE, VAC, 0–100 IN, H_20	
10	024-078		VALVE, NDL, PIPE, IN-LINE, 1/8 EPT	
11	370-191		AIRFILTER, AUTO DRAIN, 1/8 PIPE	
12	119-245		SWITCH, PRESS	
14	440-073		PIPE FITTING, NIP, 1/8-EPT	
15	440-075		PIPE FITTING, TEE, 1/8-EPT TO 1/8 IPT	
16	440-093		PIPE FITTING, ELBOW, 90°, COM, 3/8 OD, TUBE 1/8 EPT	
17	440-094		PIPE FITTING, NIP, 1/4-EPT	
18	440-143		PIPE FITTING, CPLG, 1/8-IPT, 0.75 LG	
19	440-129		PIPE FITTING, ELBOW, 90°, 1/8-EPT TO 1/8 IPT	
21	440-996		PIPE FITTING, CPLG, BARBED, 5/16 HOSE TO 1/8 EPT	
22	440-109		PIPE FITTING, REDUCER, 1/4 IPT TO 1/8 EPT	
24	601-031		TUBING, 3/8 OD – POLY FLO, 25 IN LG	
25	600-557		HOSE, 5/16 ID RBR, 18 IN LG	
26	650-162		FILTER, AIR VAC PUMP, IN LINE, 1/8 IPT	
27	600-557		HOSE, 5/16 ID RBR, 16 IN LG	
				F

SHEET 1 OF 1

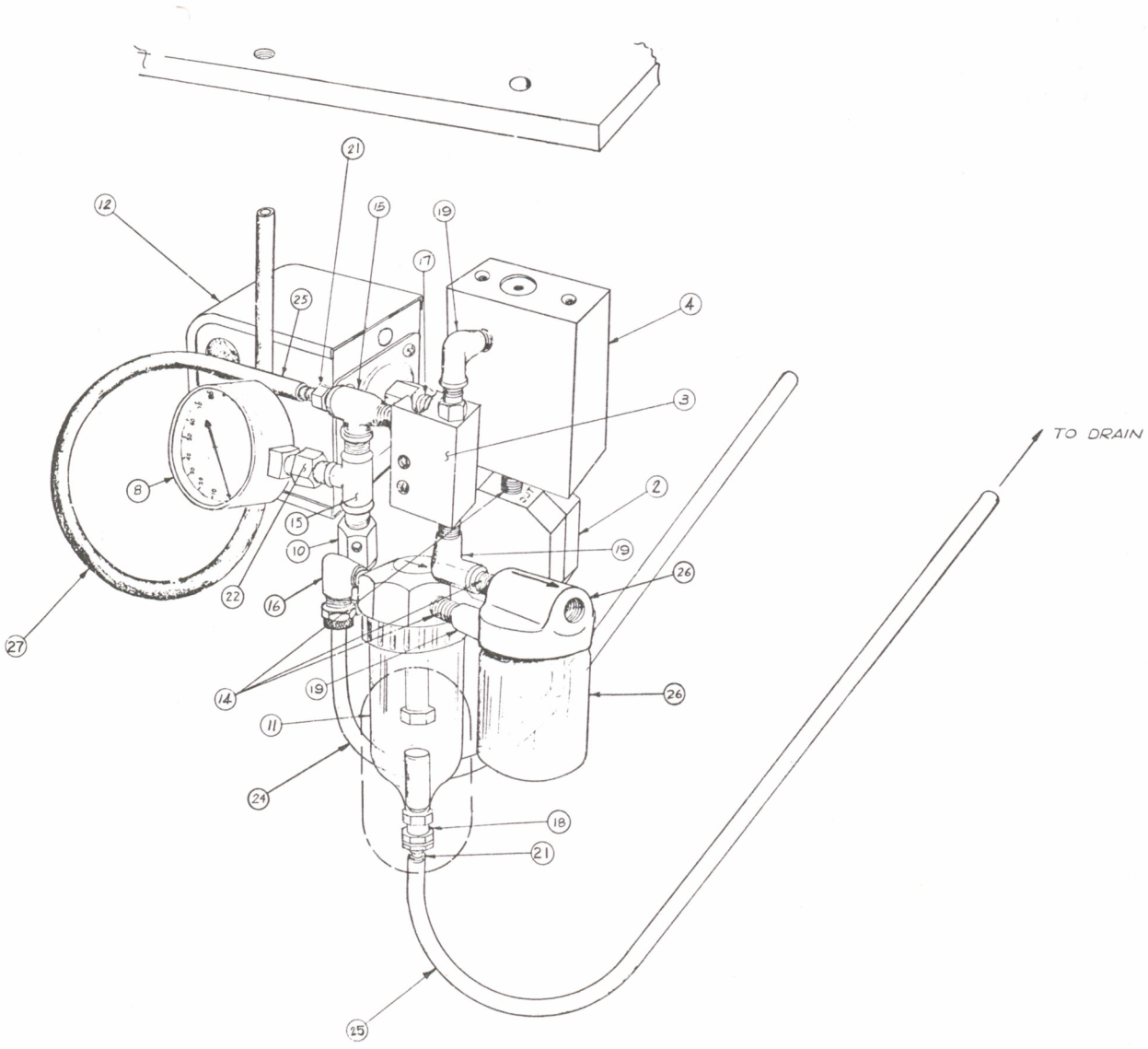

Assembly No. 1373031. Pneumatic Assembly

ITEM NO.	AMPEX PART NO.	REFERENCE NUMBER	DESCRIPTION	JEDEC NO. OR MFR. PART NO.
	1367332-01		DRAIN FILTER ASSEMBLY (NHA 1373031)	
1	1366317-01		FILTER, AIR	
2	1366318-01		DISC, FLTR RTNR	
4	430-457		RING, RTNG, INT, SST	
5	432-002		SEAL, O-RING	
				A

SHEET 1 OF 1

ITEM NO.	AMPEX PART NO.	REFERENCE NUMBER	DESCRIPTION	JEDEC NO. OR MFR. PART NO.
	1367331-01		AUTO SHUT-OFF VALVE ASSEMBLY (NHA 1373031)	
1	1367333-01		DIAPHRAGM	
2	1367334-01		PLUNGER	
5	352-235		SPRING, CPRSM	
6	470-020		SCREW, CAP, HEX SOC, NO. 6-32 X 0.50 LG	
7	502-113		WASHER, LOCK, SPLIT, LT SER, NO. 6	
				B

SHEET 1 OF 1

ITEM NO.	AMPEX PART NO.	REFERENCE NUMBER	DESCRIPTION	JEDEC NO. OR MFR. PART NO.
	1373199-02		TRIM KIT (NHA 1373043)	
1	1367325-01		RESTRAINT, LOWER COVER	
2	1373158-01		HOUSING, ELECT	
3	1373159-01		PANEL, DOOR, ELECT	
5	1373446-01		HINGE ASSY	
6	1373190-01		HINGE, ACCESS DOOR	
7	7216185-01		PIN, DOOR, PIVOT	
12	1373381-01		LABEL, DOOR, ELECT, LEFT	
13	1373382-01		LABEL, DOOR, ELECT, RIGHT	
21	310-636		PLUNGER, PUSHBUTTON	
23	310-808		GROMMET, PUSHBUTTON	
24	476-505		SCREW, TAPPING, NO. 4-40 X 0.25	
25	471-336		SCREW, FLAT HD, XREC, NO. 6-32 X 0.38 LG	
26	470-485		SCREW, CAP, BTN HD, HEX SOC, NYLON THD LOCK, NO. 10-32 X 0.375 LG	
27	471-080		SCREW, PAN HD, XREC, NO. 8-32 X 0.50 LG	
28	501-205		WASHER, PLAIN, NO. 8	
29	502-004		WASHER, LOCK, HELICAL, SPR, NO. 8	
30	496-005		NUT, LOCKING, HEX, ASSEM WASH, NO. 6	
33	501-009		WASHER, PLAIN, NO. 6	
35	503-039		WASHER, PLAIN, NYLON, 0.315 ID, 0.507 OD, 0.016 THK	
				D

SHEET 1 OF 1

ITEM NO.	AMPEX PART NO.	REFERENCE NUMBER	DESCRIPTION	JEDEC NO. OR MFR. PART NO.
	1373237-01		HEAD COVER ASSEMBLY (NHA 1373043)	
1	1373307-02		HEAD COVER, SUB ASSY, FRONT	
2	1373308-02		HEAD COVER, SUB ASSY, REAR	
3	1373309-01		LATCH	
4	1373310-01		BRACKET, LAMP MTG	
14	280-995		SPACER, THD, NO. 6-32, 1/2 LG	
15	310-788		STUD, TINNERMANN	
16	260-005		GROMMET	
17	132-343		SOCKET, LAMP, REF: DS1,2	
18	060-011	DS1,2	LAMP	
19	119-036		SWITCH, MERCURY	
20	171-009	KD1,3,4,5	TERMINAL, KNIFE DISC	
22	473-330		SCREW, SEM, NO. 6-32 X 0.250 LG	
24	492-009		NUT, NO. 6-32	
25	497-009		NUT, SHEET SPR	
26	510-023		CHAIN, BEAD, 22 BEADS LONG	
27	510-024		COUPLING, BEAD CHAIN	
28	502-003		WASHER, LOCK, NO. 6	
32	060-019	DS4,5	LAMP, 28V,	327
33	060-080	DS3	LAMP, IND, 28V, WHT	
34	132-359	DS4,5	LIGHT FIXTURE, IND, WHT LENS, REF: DS4,5	
35	310-105		CLIP, IND LAMP, REF: DS3	
36	310-106		SOCKET, LAMP, REF: DS3	

B

SHEET 1 OF 1

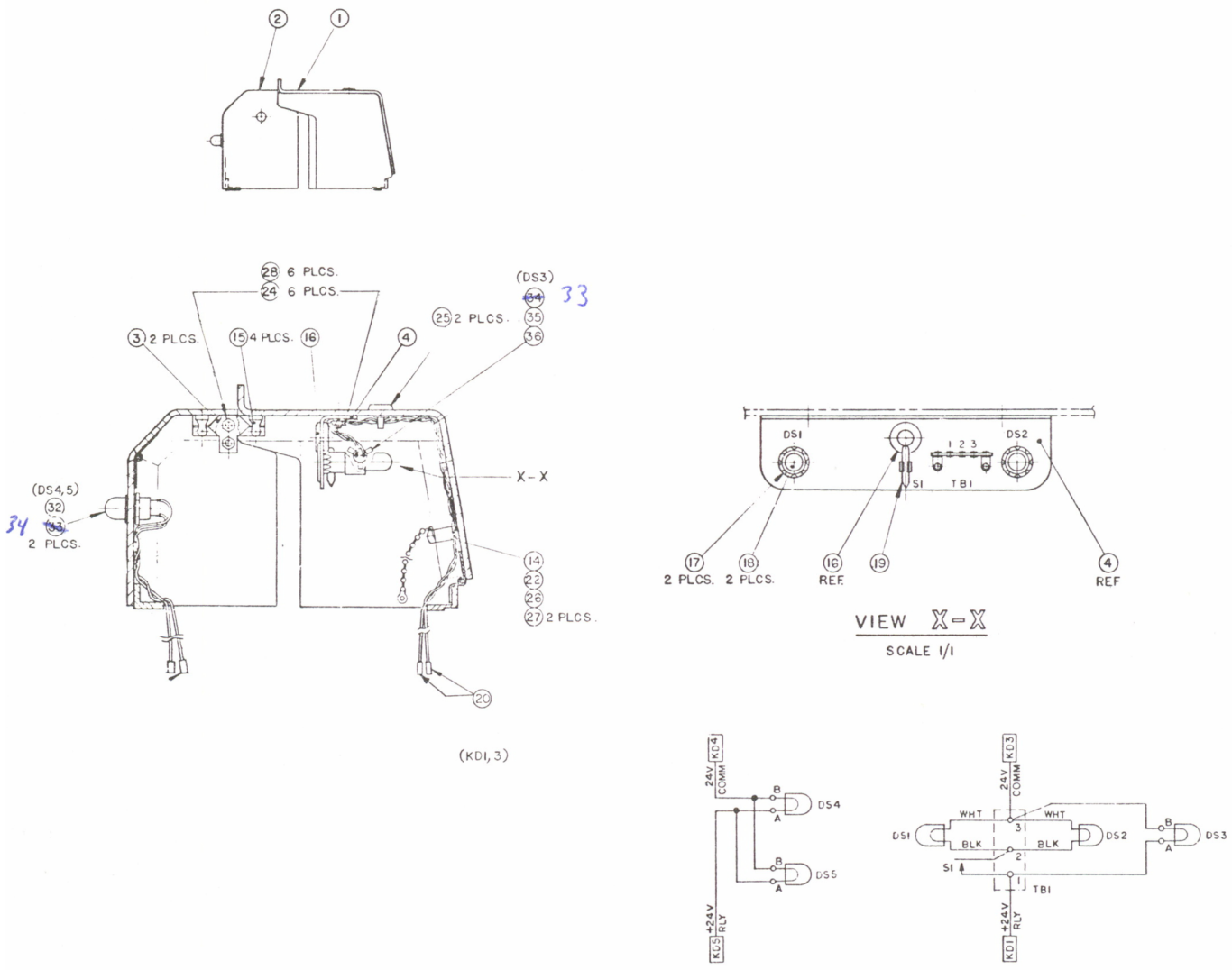

Assembly No. 1373237. Head Cover Assembly

ITEM NO.	AMPEX PART NO.	REFERENCE NUMBER	DESCRIPTION	JEDEC NO. OR MFR. PART NO.
	1373130-03		TRIAC CONTROL ASSEMBLY (NHA 1373043)	
3	1373134		SCHEMATIC	
4	1373312-02		LAMP STARTER PWA	
6	014-252		HEATSINK, XSTR, REF: Q1	
7	014-614	Q2,3	TRANSISTOR	2N3715
8	014-703		INSULATOR, MICA	
9	014-820	Q1	TRANSISTOR	DTS-410
10	013-678		DIODE	1N4385
11	059-001	R1	RESISTOR, WW, 7.5 OHM, 50W	
12	060-498	L1	BALLAST, 118V, 14-15-20-22W	
15	166-227		CONTACT, PIN, NO. 16-18, REF: ITEM 12	
17	301-130		BRACKET, CAP, 1.375 IN	
18	020-701	K1	RELAY	
19	471-061		SCREW, PAN HD, NO. 4-40 X 0.312	
20	471-071		SCREW, PAN HD, NO. 6-32 X 0.50	
21	471-067		SCREW, PAN HD, NO. 6-32 X 0.250	
22	471-069		SCREW, PAN HD, NO. 6-32 X 0.375	
23	472-467		SCREW, FLAT HD, NO. 2-56 X 0.312	
24	475-058		SCREW, SEM, NO. 6-32 X 0.375	
25	475-062		SCREW, SEM, NO. 6-32 X 0.625	
26	473-331		SCREW, SEM, NO. 6-32 X 0.500	
27	492-032		NUT, SM PATT, NO. 4-40	
28	493-168		NUT, SELF LOCK, NO. 2-56	
29	020-808		HOLDDOWN SPRING, RELAY PARTS, REF: K1	
30	496-005		NUT, KEP, NO. 6-32	
31	501-009		WASHER, FLAT, NO. 6	
32	502-002		WASHER, SPLIT LOCK, NO. 4	
33	150-260		SOCKET, RLY, REF: K1	
34	580-510		SOCKET, XSTR, REF: Q1-3	
35	581-267	A1,2	POWER MODULE, TRIAC	
38	280-025		SPACER, THD, NO. 6-32, 0.250 OD X 0.750 LG	
40	560-418	T1	TRANSFORMER, AUTO, PWR	
41	180-925	TB1-1	TERMINAL STRIP, 3 TERM	
42	126-165	CB1	CIRCUIT BREAKER, 5A	
43	1373132-02		TRIAC CONTROL PWA	
44	1373131-03		CHASSIS, TRIAC CONT	
45	1373362-03		TRIAC CONTROL, HARN	
				E

SHEET 1 OF 1

ITEM NO.	AMPEX PART NO.	REFERENCE NUMBER	DESCRIPTION	JEDEC NO. OR MFR. PART NO.
	1373312-02		LAMP STARTER PWA (NHA 1373130)	
2	1373134		SCHEMATIC	
3	103307-01		STANDOFF	
4	013-167	VR1	DIODE, ZENER	1N756A
5	013-600	A1	DIODE ASSEMBLY, RECT	MDA942-3
6	031-656	C3	CAPACITOR, FXD, AL, 150 UF, 250V	
8	037-186	C1	CAPACITOR, TANT, 120 UF, 10V, 10%	
9	041-687	R1	RESISTOR, FXD, COMP, 51 OHM, 2W, 5%	
10	041-984	R2	RESISTOR, FXD, COMP, 15K, 2W	
11	501-019		WASHER, PLAIN, NO. 10, REF: C3	
12	055-697	C2	CAPACITOR, FXD, MYLAR, 0.1 UF, 200V	
				B

SHEET 1 OF 1

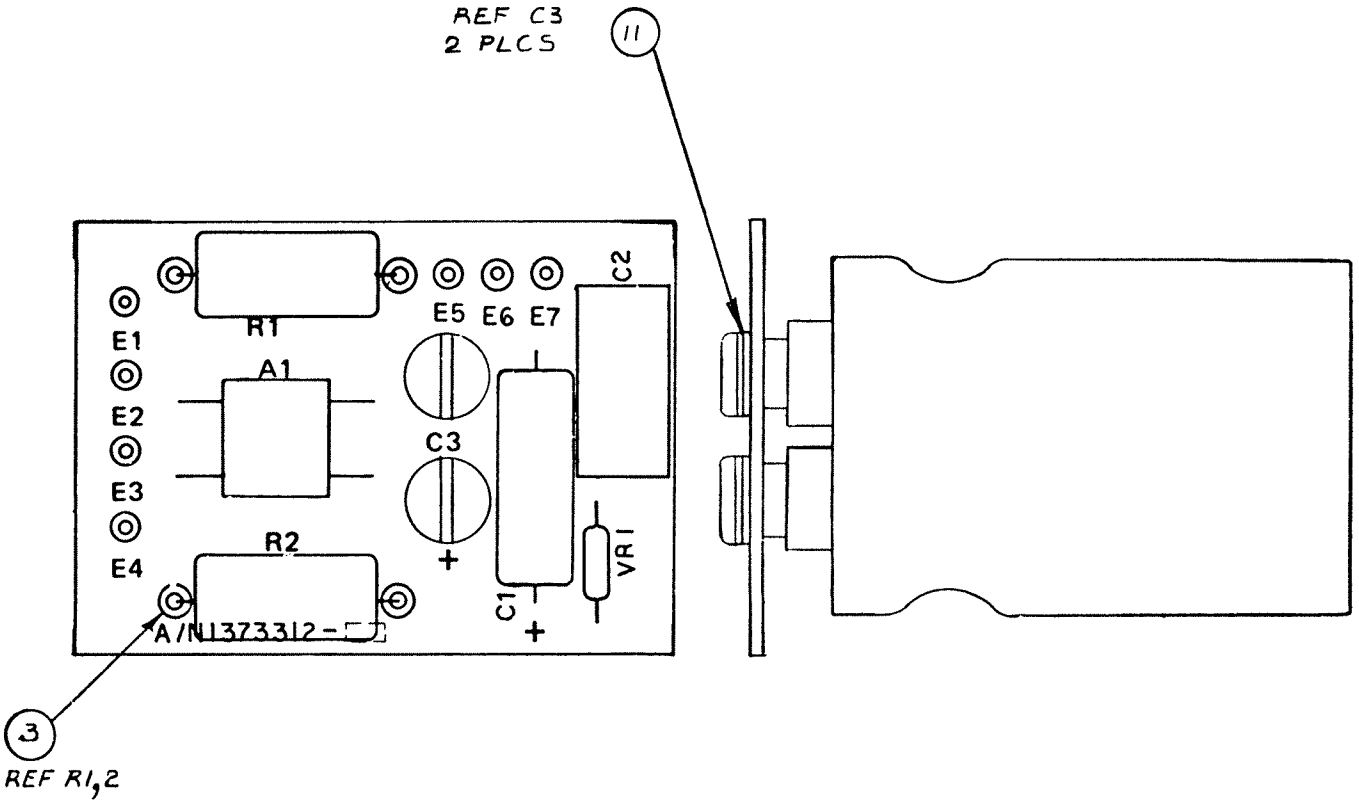

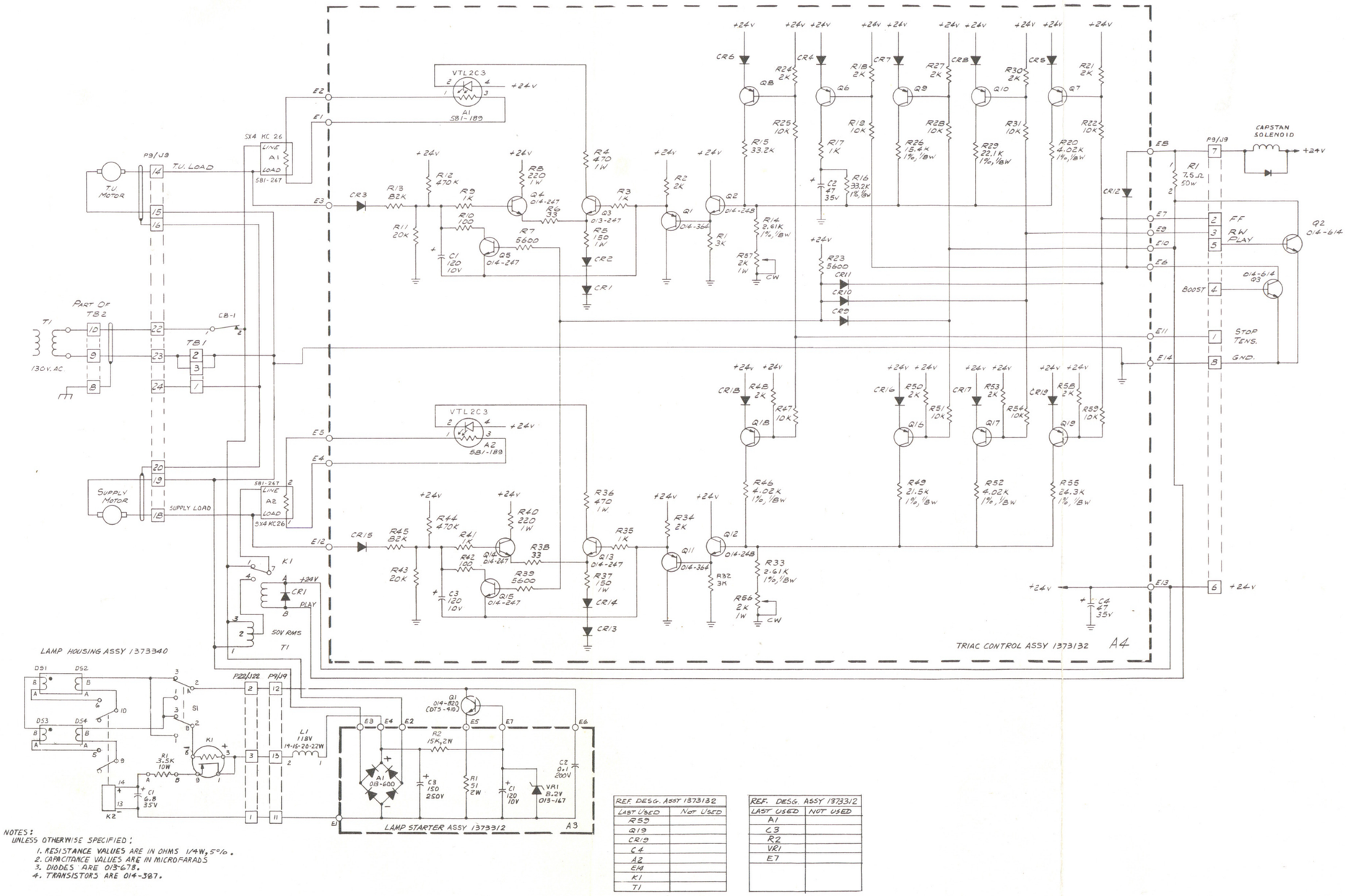

REF. DESG. ASSY 1373132	
LAST USED	NOT USED
R59	
Q19	
CR19	
C4	
A2	
E14	
K1	
T1	

REF. DESG. ASSY 1373312	
LAST USED	NOT USED
A1	
C3	
R2	
VR1	
E7	

F

Schematic No. 1373134.
Triac Control Assembly

ITEM NO.	AMPEX PART NO.	REFERENCE NUMBER	DESCRIPTION	JEDEC NO. OR MFR. PART NO.
	1373132-02		TRIAC CONTROL PWA (NHA 1373130)	
2	1373134		SCHEMATIC	
3	013-678	CR1-19	DIODE	1N4385
4	014-247	Q3-5,13-15	TRANSISTOR	2N2219
5	014-248	Q2,12	TRANSISTOR	2N2222
6	014-364	Q1,11	TRANSISTOR	2N2905A
7	014-387	Q6-10,16-19	TRANSISTOR	2N2907A
8	037-181	C2,4	CAPACITOR, TANT, 47 UF, 35V, 10%	
9	037-186	C1,3	CAPACITOR, TANT, 120 UF, 10V, 10%	
10	041-098	R8,40	RESISTOR, COMP, 220 OHM, 1W, 5%	
11	041-100	R4,36	RESISTOR, COMP, 470 OHM, 1W, 5%	
12	041-408	R19,22,25,28,31, 47,51,54,59	RESISTOR, COMP, 10K, 1/4W, 5%	
13	041-410	R3,9,17,35,41	RESISTOR, COMP, 1K, 1/4W, 5%	
14	041-419	R10,42	RESISTOR, COMP, 100 OHM, 1/4W, 5%	
15	041-507	R7,23,39	RESISTOR, COMP, 5.6K, 1/4W, 5%	
16	041-508	R1[illegible],43	RESISTOR, COMP, 20K, 1/4W, 5%	
17	041-512	R12,44	RESISTOR, COMP, 470K, 1/4W, 5%	
18	041-543	R13,45	RESISTOR, COMP, 82K, 1/4W, 5%	
19	041-550	R1,32	RESISTOR, COMP, 3K, 1/4W, 5%	
20	041-560	R2,18,21,24,27, 30,34,48,50,53,58	RESISTOR, COMP, 2K, 1/4W, 5%	
21	041-651	R6,38	RESISTOR, COMP, 33 OHM, 1/4W, 5%	
22	041-831	R5,37	RESISTOR, COMP, 150 OHM, 1W, 5%	
23	044-805	R56,57	RESISTOR, VAR, 2K, 1W, 10%	
24	062-526	R20,46,52	RESISTOR, MF, 4.02K, 1/8W, 1%	
26	062-992	R26	RESISTOR, MF, 15.4K, 1/8W, 1%	
27	066-009	R15	RESISTOR, MF, 33.2K, 1/8W, 1%	
28	066-063	R14,33	RESISTOR, MF, 2.61K, 1/8W, 1%	
30	062-800	R49	RESISTOR, MF, 21.5K, 1/8W, 1%	
31	280-130		PAD, MTG, XSTR, T0-18	
32	280-998		PAD, MTG, XSTR, T0-5	
33	581-189	A1,2	DIODE, LT EMTG	
34	066-925	R29	RESISTOR, MF, 22.1K, 1/8W, 1%	
35	062-573	R55	RESISTOR, MF, 24,3K, 1/8W, 1%	
36	066-009	R16	RESISTOR, MF, 33.2K, 1/8W, 1%	
				C

SHEET 1 OF 1

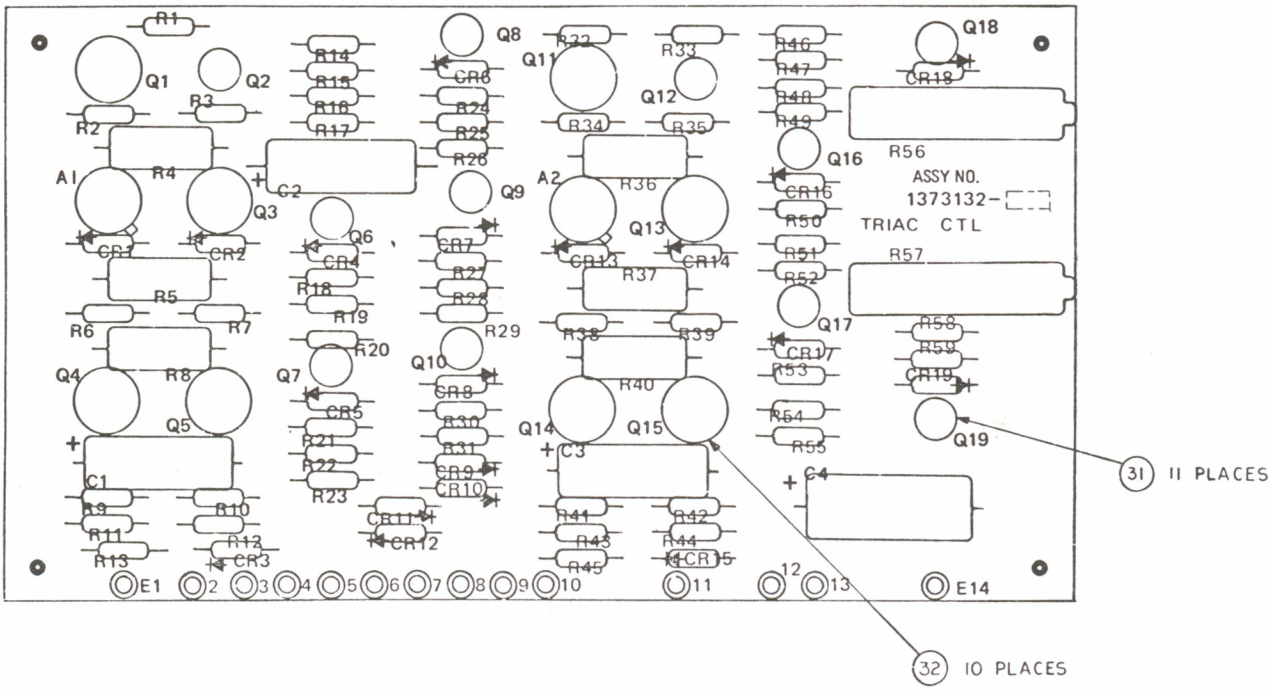

Assembly No. 1373132. Triac Control PWA

ITEM NO.	AMPEX PART NO.	REFERENCE NUMBER	DESCRIPTION	JEDEC NO. OR MFR. PART NO.
	1373362-03		TRIAC CONTROL HARNESS (NHA 1373130)	
2	166-200		CONTACT, PINS, NO. 20–22 ~ male ~ mates with pin 166-199	
3	166-227		CONTACT, PINS, NO. 16–18	
4	167-027	J9	CONNECTOR, 24 POS, RECP ~ uses pin 166-200	
5	171-044		LUG, RING, NO. 16–14	
6	171-005		LUG, RING, NO. 22–18	
7	171-238		CONTACT, QIK DISC, NO. 18–22 AWG	
8	173-492		CONTACT, QIK DISC, NO. 16–14 AWG	
			Cable connector 167-026 uses female pin # 166-199	
				C

SHEET 1 OF 1

ITEM NO.	AMPEX PART NO.	REFERENCE NUMBER	DESCRIPTION	JEDEC NO. OR MFR. PART NO.
	1373048-01		CONTROL PANEL ASSEMBLY (NHA 1373043)	
1	1373184-01		MAINTENANCE CONTROL PANEL	
3	1373212-02		CONTROL PANEL HARNESS ASSEMBLY	
5	1373239-02		CONTROL PANEL ASSEMBLY	
6	1373364		WIRING DIAGRAM, CONT PNL	
7	302-388		STRAP, CABLE	
9	496-004		NUT, KEP, NO. 4-40	
				C

SHEET 1 OF 1

ITEM NO.	AMPEX PART NO.	REFERENCE NUMBER	DESCRIPTION	JEDEC NO. OR MFR. PART NO.
	1373184-01		MAINTENANCE CONTROL PANEL ASSEMBLY (NHA 1373048)	
1	1365042-02	S15	SWITCH, RTRY, 2 POLE, 4 POS	
2	1373229-01		PANEL, MAINT	
4	058-066	R2-5,10-13	RESISTOR, VAR, 5K	
5	058-790	R6-9	RESISTOR, VAR, 5K	
7	120-639	S17	SWITCH, TGL, SPDT	
8	120-940	S16	SWITCH, PB	
9	230-071		KNOB, LOCK, REF: R2-5	
10	302-355		PLATE, MTG, STRAP, CABLE	
11	471-116		SCREW, PAN HD, XREC, NO. 6-32 X 3/16 IN	
12	492-034		NUT, NO. 6-32	
14	4100105-02		KNOB, REF: R2-5	
15	6000001-20		KNOB, REF: R6-9	
16	6000003-20		KNOB, REF: S15	
17	6000005-20		KNOB, REF: R10-13	
				C

SHEET 1 OF 1

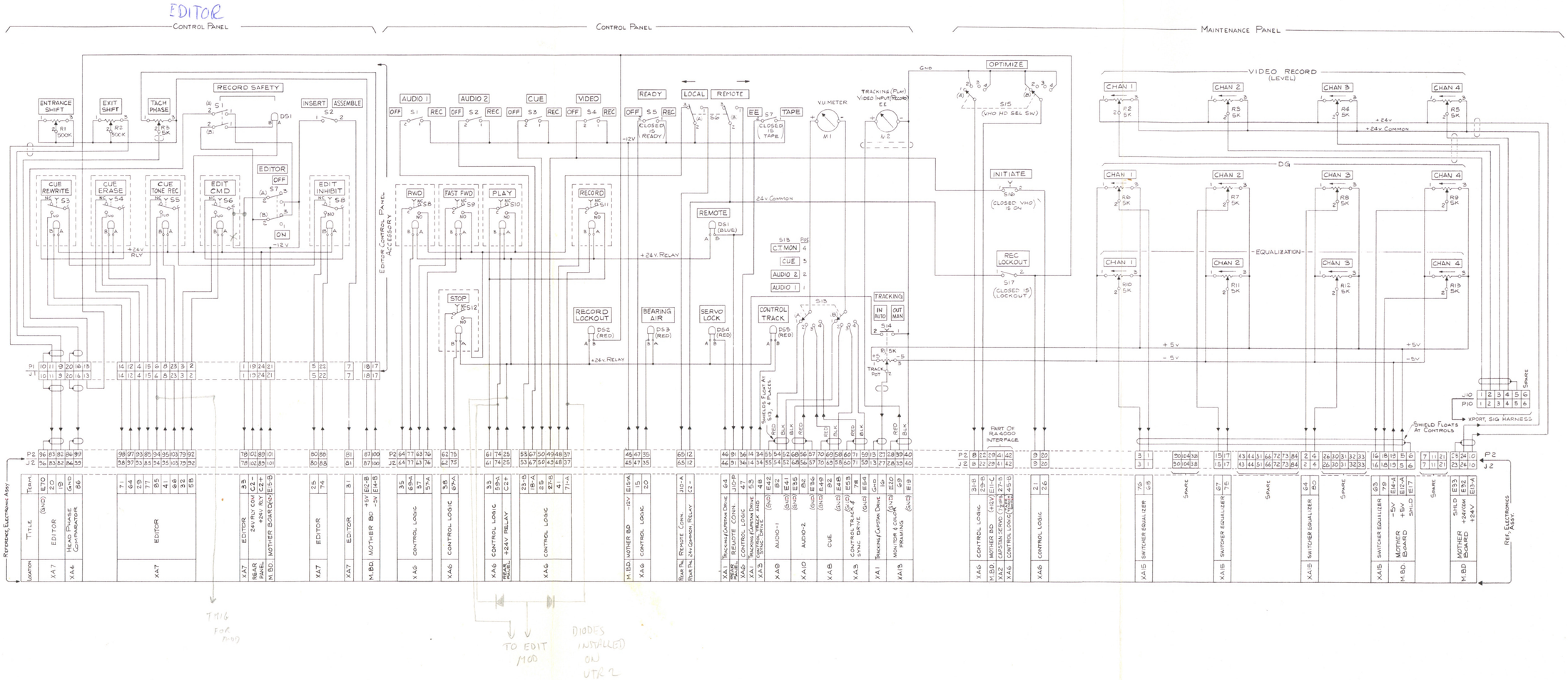

A

Schematic No. 1373364.
Control Panel Assembly Wiring Diagram

ITEM NO.	AMPEX PART NO.	REFERENCE NUMBER	DESCRIPTION	JEDEC NO. OR MFR. PART NO.
	1373212-02		CONTROL PANEL HARNESS ASSEMBLY (NHA 1373048)	
1	1371197-01		HOOD, CONN	
2	1371198-01		HOOD, CONN	
5	166-199		CONTACT, SOC, NO. 20-22 AWG, REF: J1,10	
6	166-200		CONTACT, PIN, NO. 20-22 AWG, REF: P2	
7	166-224		CONTACT, SOC, NO. 24-26 AWG, REF: J1	
8	166-225		CONTACT, SOC, NO. 16-18 AWG, REF: J1	
9	166-226		CONTACT, PIN, NO. 24-26 AWG, REF: P2	
10	166-227		CONTACT, PIN, NO. 16-18 AWG, REF: P2	
12	167-023	J10	CONNECTOR, RECPT, 6 POS	
13	167-027	J1	CONNECTOR, RECPT, 24 POS	
14	1373435-01	P2	CONNECTOR, PLUG, 104 POS	
16	302-366		STRAP, CABLE	
17	473-324		SCREW, PAN HD, XREC, NO. 4-40 X 0.250 LG	
18	310-106	DS1-5	SOCKET, IND LAMP	
				E

SHEET 1 OF 1

ITEM NO.	AMPEX PART NO.	REFERENCE NUMBER	DESCRIPTION	JEDEC NO. OR MFR. PART NO.
	1373239-02		CONTROL PANEL ASSEMBLY (NHA 1373048)	
1	1365042-02	S13	SWITCH, RTRY, 2 POLE, 4 POS	
2	1366969-01		LENS, PB (STOP), REF: S12	
3	1366969-02		LENS, PB (PLAY), REF: S10	
4	1366969-06		LENS, PB (RCD), REF: S11	
7	1373186-01		CLAMP, MTR	
9	1373254-01		LENS, PB (RWND), REF: S8	
10	1373254-02		LENS, PB (FFWD), REF: S9	
12	058-895	R1/S14	RESISTOR, VAR, 5K/PUSH-PULL SW	
13	060-070		LAMP, SW, 28V, REF: S8-12	
14	060-077	DS1	LAMP, IND, 28V, BLU	
15	060-079	DS2,3,4,5	LAMP, IND, 28V, RED	
17	090-186	M1	METER	
18	090-187	M2	METER	
20	119-248	S8-12	SWITCH, PB, SPDT	
21	119-258	S6	SWITCH, TGL, LOCK-TYPE, DPDT	
22	119-259	S1-4	SWITCH, TGL, LOCK-TYPE, SPDT	
23	120-639	S5,7	SWITCH, TGL, SPDT	
24	501-863		WASHER, PLAIN, 0.250 ID, 0.375 OD	
26	310-105	DS1-5	CLIP, IND LAMP	
27	302-355		PLATE, MTG, STRAP, CABLE	
28	471-334		SCREW, FLAT HD, XREC, NO. 6-32 X 1/4	
29	492-034		NUT, NO. 6-32	
30	496-005		NUT, KEP, NO. 6-32	
31	172-009		LUG, SOLDER, PLAIN, NO. 10	
32	1373180-02		PANEL, CONT	
33	1373181-02		OVERLAY, CONT PNL	
34	6000003-20		KNOB, BLK, REF: S13	
35	6000005-20		KNOB, BLK, REF: R1/S14	
36	121-211		NUT, DECORATIVE, 1/4-40, REF: S1-7	
				C

SHEET 1 OF 1

ITEM NO.	AMPEX PART NO.	REFERENCE NUMBER	DESCRIPTION	JEDEC NO. OR MFR. PART NO.
	1373116-03		HEAD CHANNEL HOUSING ASSEMBLY (NHA 1373043)	
1	1373117-01		HOUSING, HD CHAN	
4	1366695-01		GUIDE, PWB	
5	1373005-03		RF PRE-AMPLIFIER PWA	
6	471-327		SCREW, MACH, XREC, 82°, FLAT HD, NO. 4-40 X 0.312	
7	473-324		SCREW, NO. 4-40 X 1/4, SEMS	
8	501-008		WASHER, NO. 4	
10	1373143-02		RF RECORD AMPLIFIER PWA	
				D

SHEET 1 OF 1

ITEM NO.	AMPEX PART NO.	REFERENCE NUMBER	DESCRIPTION	JEDEC NO. OR MFR. PART NO.
	1373005-03		RF PREAMPLIFIER PWA (NHA 1373116)	
4	1373007		SCHEMATIC	
5	1373106-01		PLATE, HLDN	
6	1373107-01		SPACER, CONN	
7	1360036-01		PAD, RLY, REF: K1,2,3,4	
8	1368331-01		SHIELD	
11	013-690	VR1,2,3,4	DIODE, ZENER	1N962B
12	013-689	CR1-16	DIODE	FD600
15	014-506	Q5-10,15-19, 24-28,33-37	TRANSISTOR	2N2501
16	014-581	Q2,4,12,14,21,23, 30,32	TRANSISTOR	2N2369A
17	014-383	Q3,13,22,31	TRANSISTOR	2N2484
18	580-685	Q1,11,20,29	TRANSISTOR, FET	E309
24	020-467	K1-4	RELAY	
25	030-963	C5,7,17,18,26,28, 38,39,45,47,57, 58,66,68,78,79, 82,83-86	CAPACITOR, CER, 0.1 UF, 100V, 10%	
27	030-223	C2,23,42,63	CAPACITOR, CER, 2.2 UF, 25V, 20%	
28	030-057	C3,4,20,24,25, 43,44,64,65	CAPACITOR, CER, 0.01 UF, 100V, 20%	
29	034-177	C9,30,49,70	CAPACITOR, MICA, 100 PF, 500V, ±5%	
30	035-734	C8,10,12,13,14, 15,29,31,33,34,35, 36,48,50,52,53,54, 55,69,71,73,74-76	CAPACITOR, MYLAR, 0.01 UF, 50V, ±5%	
31	035-893	C19,40,59,80	CAPACITOR, MYLAR, 0.1 UF, 50V, ±5%	
32	037-164	C11,32,51,72	CAPACITOR, TANT, 1 UF, 35V, ±10%	
33	037-726	C6,27,46,67	CAPACITOR, TANT, 3.3 UF, 15V, ±10%	
34	037-507	C16,37,56,77	CAPACITOR, TANT, 150 UF, 15V, ±10%	
35	037-746	C21,81	CAPACITOR, TANT, 47 UF, 20V, ±10%	
36	037-736	C61	CAPACITOR, TANT, 22 UF, 35V, ±10%	
38	056-292	C60	CAPACITOR, MICA, 500 PF, 500V, 5%	
39	038-285	C1,22,41,62	CAPACITOR, VAR, 35-3.5 PF, 250V	
40	041-394	R29,72,115,152	RESISTOR, COMP, 100K, 1/4W, 5%	
41	041-407	R27,69,112,151	RESISTOR, COMP, 3.3K, 1/4W, 5%	
42	041-408	R3,30,31,45,71, 73,88,114,116, 127,153,155	RESISTOR, COMP, 10K, 1/4W, 5%	
44	041-412	R34,35,76,77,118, 120,157,159	RESISTOR, COMP, 4.7K, 1/4W, 5%	
				H

SHEET 1 OF 3

ITEM NO.	AMPEX PART NO.	REFERENCE NUMBER	DESCRIPTION	JEDEC NO. OR MFR. PART NO.
45	041-425	R4,12,13,15,46, 53,54,57,89,96, 97,100,128,135, 136,139	RESISTOR, COMP, 47 OHM, 1/4W, 5%	
46	041-428	R7,39,49,81,84, 92,124,131,163	RESISTOR, COMP, 470 OHM, 1/4W, 5%	
47	041-434	R11,52,82,95,134	RESISTOR, COMP, 1.8K, 1/4W, 5%	
48	041-440	R2,44,87,126	RESISTOR, COMP, 1.2K, 1/4W, 5%	
49	041-442	R10,40,55,98,137	RESISTOR, COMP, 2.7K, 1/4W, 5%	
51	041-506	R36,78,121,160	RESISTOR, COMP, 820 OHM, 1/4W, 5%	
52	041-511	R28,42,70,113,154	RESISTOR, COMP, 3.9K, 1/4W, 5%	
53	041-520	R6,48,91,130	RESISTOR, COMP, 7.5K, 1/4W, 5%	
54	041-570	R21,22,23,32,63, 64,65,74,106,107, 108,117,145,146, 147,156	RESISTOR, COMP, 2.4K, 1/4W, 5%	
55	041-584	R5,47,90,129	RESISTOR, COMP, 4.3K, 1/4W, 5%	
56	041-507	R8,41,50,93,132	RESISTOR, COMP, 5.6K, 1/4W, 5%	
57	041-410	R14,56,99,138	RESISTOR, COMP, 1K, 1/4W, 5%	
58	062-625	R18,19,60,61, 103,104,141,142	RESISTOR, MF, 1210 OHM, 1/8W, 1%	
59	062-836	R37,38,79,80, 122,123,161,162	RESISTOR, MF, 75 OHM, 1/8W, 1%	
60	062-864	R25,26,67,68, 110,111,149,150	RESISTOR, MF, 150 OHM, 1/8W, 1%	
61	062-884	R20,24,62,66, 105,109,144,148	RESISTOR, MF, 301 OHM, 1/8W, 1%	
62	062-945	R9,51,94,133	RESISTOR, MF, 2.43K, 1/8W, 1%	
63	062-964	R1,43,86,125	RESISTOR, 4.53K, 1/8W, 1%	
65	058-452	R83	RESISTOR, VAR, 200 OHM, 1/2W, 10%	
66	058-540	R17,59,101,143	RESISTOR, VAR, 5K, 1/2W, 10%	
67	058-651	R33,75,119,158	RESISTOR, VAR, 2K, 1/2W, 10%	
70	066-441	R16,58,102,140	RESISTOR, MF, 698 OHM, 1/8W, 1%	
71	041-518	R85	RESISTOR, COMP, 33K, 1/4W, 5%	
77	540-074	L1,5,9,13	INDUCTOR, 1500 UH, 10%	
78	540-007	L4,8,12,15,17	INDUCTOR, 470 UH, 5%	
79	541-973	L2,3,6,7,10,11, 14,15	INDUCTOR, 1.0 UH, 5%	
82	586-269	A9	INTEGRATED CIRCUIT	UA741C
83	587-164	A2,4,6,8	INTEGRATED CIRCUIT	MC1350P
84	587-163	A1,3,5,7	INTEGRATED CIRCUIT	MC1330P
86	139-037	J1,2,3,4	CONNECTOR, COAX	
				H

ASSEMBLY NO. 1373005 TITLE RF PREAMPLIFIER PWA

ITEM NO.	AMPEX PART NO.	REFERENCE NUMBER	DESCRIPTION	JEDEC NO. OR MFR. PART NO.
87	146-020	J5	CONNECTOR, 15 PIN	
88	280-130		PAD, MTG, XSTR, REF: Q1-37	
89	932-035		BEAD, FERRITE	
90	472-454		SCREW, PAN HD, NO. 2-56 X 0.375	
91	473-324		SCREW, ASSEM WASH, NO. 4-40 X 1/4	
92	501-008		WASHER, PLAIN, NO. 4	
93	502-023		WASHER, LOCK, INT TOOTH, NO. 2	
94	280-173		SPACER, 8 PIN	
99	587-364		SOCKET, IC, 8 PIN, REF: A1,3,5,7	H

SHEET 3 OF 3

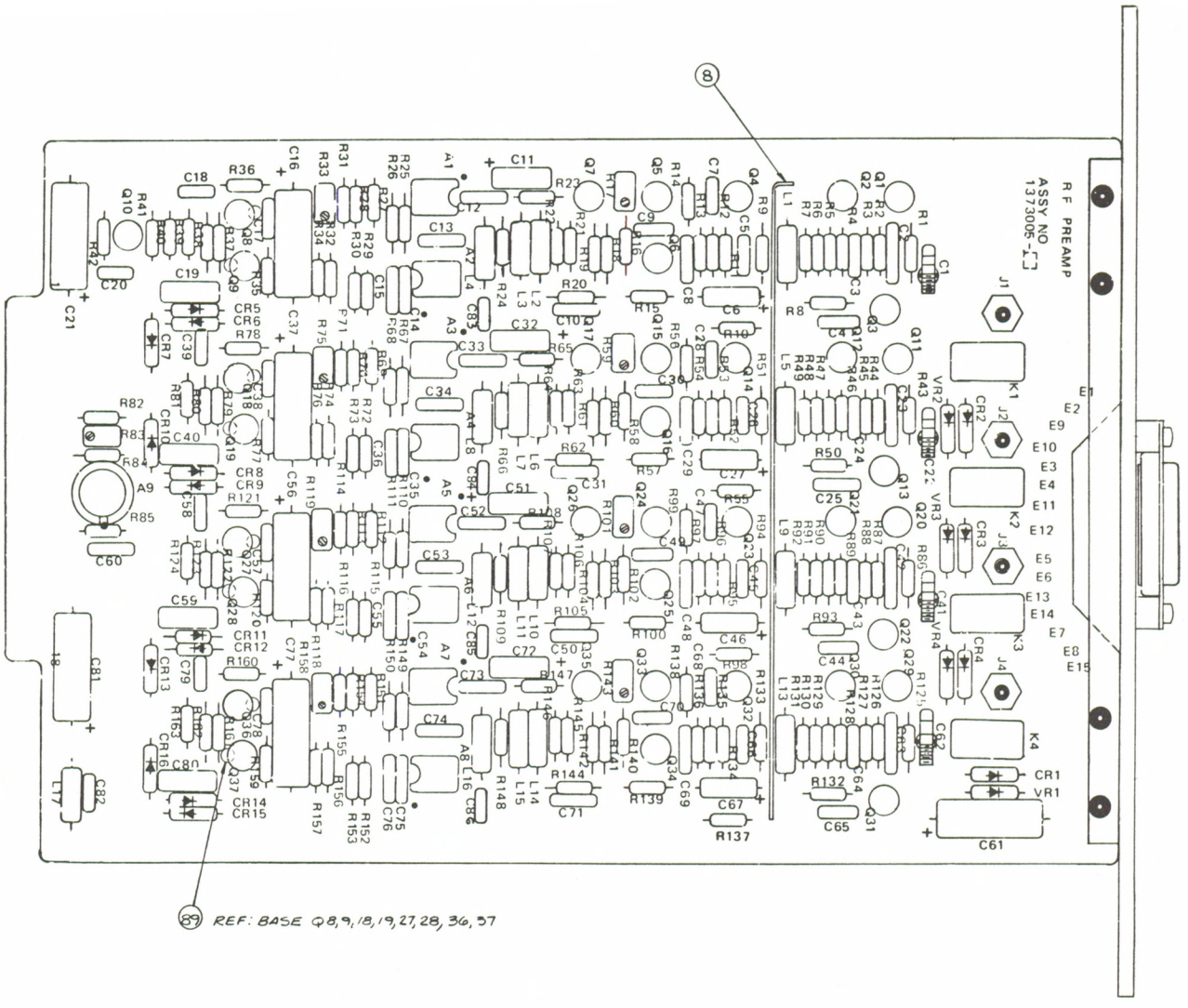

ITEM NO.	AMPEX PART NO.	REFERENCE NUMBER	DESCRIPTION	JEDEC NO. OR MFR. PART NO.
	1373143-02		RF RECORD AMPLIFIER PWA (NHA 1373116)	
2	1373145		SCHEMATIC	
5	103307-03		STANDOFF, 0.313, REF: R25,27,52,54,79,81,106,108	
6	103307-02		STANDOFF, 0.125, REF: R33,34,37,38,60,61,64,65,87,88,91,92, 114,115,118,119	
8	1367273-01		SPACER, CONN, REF: J1-4	
9	1373146-01	T1,3,5,7	TRANSFORMER, RCD CUR	
10	1373354-01	T2,4,6,8	TRANSFORMER, TOROID, BIFILAR	
11	1375093-01		STRAP, GND	
13	013-689	CR1-4	DIODE	FD600
15	014-248	Q9-12	TRANSISTOR	2N2222
16	014-364	Q26	TRANSISTOR	2N2905A
17	014-505	Q5-8	TRANSISTOR	2N3251
18	014-581	Q13,16,17,20-23, 27,28,31	TRANSISTOR	2N2369A
19	014-852	Q15,19,25,30	TRANSISTOR, DUAL	MD2369A
21	030-932	C8,9,25,27,32,33, 53,54	CAPACITOR, CER, 0.47 UF, 50V, 20%	
22	014-632		HEATSINK, REF: Q14,18,24,29	
23	014-712		SPACER, XSTR, 6 PIN, REF: Q14,15,18,19,24,25,29,30	
24	030-963	C2-7,11-14,17-19, 22-24,26-28,30,31, 34-36,39,40,42-44, 48,50-52	CAPACITOR, CER, 0.1 UF, 100V, 10%	
26	030-966	C10,21,37,38,49	CAPACITOR, CER, 0.01 UF, 100V, 10%	
27	037-062	C46	CAPACITOR, TANT, 56 UF, 6V, 10%	
28	037-164	C20,45	CAPACITOR, TANT, 1 UF, 35V, 10%	
29	037-736	C1	CAPACITOR, TANT, 22 UF, 35V, 10%	
31	037-991	C16,47	CAPACITOR, TANT, 22 UF, 15V, 10%	
32	034-759	C56	CAPACITOR, MICA, 15 PF, ±0.5 PF, 500V	
33	066-887	R2,4,6,8	RESISTOR, FXD, 1 OHM, 1/4W, 5%	
34	041-002	R21,23,48,50,75, 77,102,104	RESISTOR, COMP, 10 OHM, 1/2W, 5%	
35	041-408	R9-14,17,19	RESISTOR, COMP, 10K, 1/4W, 5%	
36	041-412	R1,3,5,7	RESISTOR, 4.7K, 1/4W, 5%	
37	041-414	R15,16,18,20	RESISTOR, 2.2K, 1/4W, 5%	
38	041-419	R29,36,46,47,56, 63,73,74,83,90, 100,101,110,117, 127,128,141	RESISTOR, COMP, 100 OHM, 1/4W, 5%	
39	041-435	R134	RESISTOR, COMP, 150 OHM, 1/4W, 5%	
40	041-497	R131,132	RESISTOR, COMP, 560 OHM, 1/4W, 5%	
41	041-503	R129	RESISTOR, COMP, 270 OHM, 1/4W, 5%	
42	041-506	R137	RESISTOR, COMP, 820 OHM, 1/4W, 5%	
43	041-733	R142	RESISTOR, COMP, 56 OHM, 1/4W, 5%	
44	041-570	R41-45,68-72, 95-99,122-126	RESISTOR, COMP, 2.4K, 1/4W, 5%	
				K

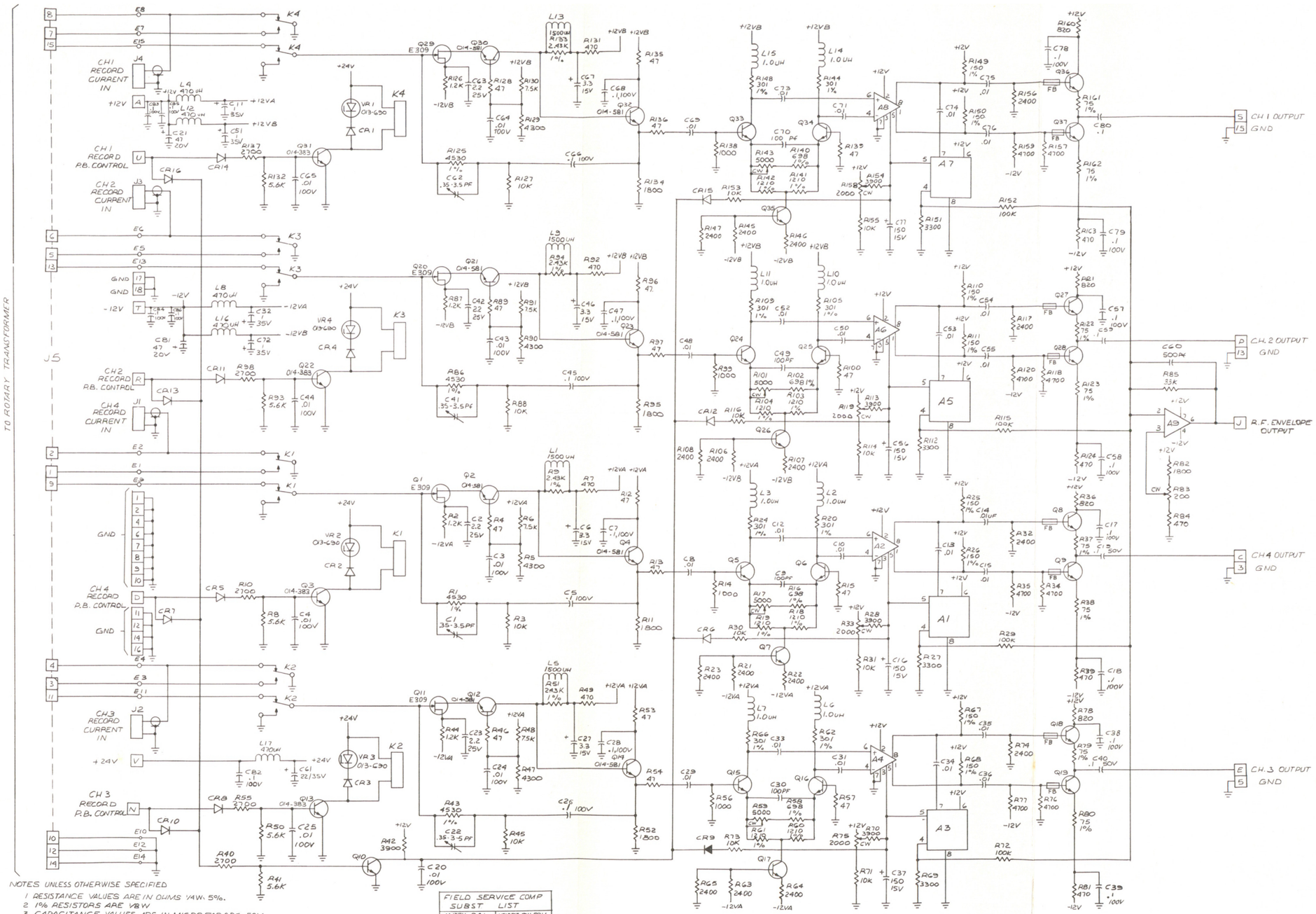

NOTES UNLESS OTHERWISE SPECIFIED

1. RESISTANCE VALUES ARE IN OHMS 1/4W. 5%.
2. 1% RESISTORS ARE 1/8W
3. CAPACITANCE VALUES ARE IN MICROFARADS. 50V.
4. TRANSISTORS ARE TYPE 014-506.
5. DIODES ARE TYPE 013-689.

FIELD SERVICE COMP SUBST LIST	
AMPEX P/N	NEAREST COM EQV
014-506	2N2501
014-581	2N2369A
014-383	2N2484

I.C. LISTS			
REFERENCE DESIGNATION	A2,4, 6,8	A1,3,5,7	A9
AMPEX P/N	587-164	587-163	586-269
VENDOR P/N	MC1350P	MC1330P	μA714C
VOLTAGE PIN	2	6	7
GROUND PIN	7,3	8	4

Schematic No. 1373007.
RF Preamplifier PWA

ITEM NO.	AMPEX PART NO.	REFERENCE NUMBER	DESCRIPTION	JEDEC NO. OR MFR. PART NO.
45	042-478	R33,34,60,61,87, 88,114,115	RESISTOR, MF, 200 OHM, 1/4W, 1%	
46	058-452	R35,62,89,116	RESISTOR, VAR, CERMET, 200 OHM, 1/2W, 10%	
47	048-625	R37,64,91,118	RESISTOR, MF, 150 OHM, 1/4W, 1%	
48	062-639	R138	RESISTOR, MF, 3.01K, 1/8W, 1%	
50	049-001	R28,32,39,40,55, 59,66,67,82,86, 93,94,109,113, 120,121	RESISTOR, COMP, 24 OHM, 1/4W, 5%	
53	541-068	L2,4,6,8	INDUCTOR, VAR, 10 UH, 20%	
54	051-341	L1,3,5,7	INDUCTOR, 15 UH, 5% (NOMINAL)	
57	055-144	C15,29,41,55	CAPACITOR, MYLAR, 0.012 UF, 50V, 5%	
60	062-847	R130,135,140	RESISTOR, MF, 100 OHM, 1/8W, 1%	
61	057-262	R30,31,38,57,58, 65,84,85,92,111, 112,119	RESISTOR, MF, 750 OHM, 1/2W, 1%	
62	048-402	R24-27,51-54, 78-81,105-108	RESISTOR, MF, 100 OHM, 1/2W, 1%	
63	058-510	R22,49,76,103	RESISTOR, VAR, CERMET, 20 OHM, 3/4W, 20%	
64	062-828	R139	RESISTOR, MF, 63.4 OHM, 1/8W, 1%	
66	062-827	R136	RESISTOR, MF, 56.2 OHM, 1/8W, 1%	
67	062-878	R133	RESISTOR, MF, 226 OHM, 1/8W, 1%	
68	501-169		WASHER, PLAIN, NO. 4	
70	139-038	J1-4	CONNECTOR, COAX	
71	501-008		WASHER, PLAIN, NO. 4	
72	280-130		SPACER, XSTR, T0-18, REF: Q5-13,16,17,20-23,27,28,31	
73	280-998		PAD, MTG, REF: Q26	
76	473-325		SCREW, ASSEM WASH, NO. 4-40 X 5/16	
77	496-004		NUT, HEX, CAPTIVE WASH, NO. 4-40	
78	471-061		SCREW, PAN HD, NO. 4-40 X 0.312	
80	502-013		WASHER, LOCK, EXT, NO. 4	
81	580-337		HEATSINK, REF: Q1-4	
82	580-636	Q14,18,24,29	TRANSISTOR, DUAL	MD3725
83	580-637	Q1,2,3,4	TRANSISTOR	GE D40C4
85	586-168	A1	INTEGRATED CIRCUIT	SN74H00N
86	586-326	A2	INTEGRATED CIRCUIT	SN7404N
87	586-488	A3,4	INTEGRATED CIRCUIT	MC1235L
90	172-004		LUG, GND, NO. 4, REF: J1	
97	932-034		BEAD, FERRITE, 0.250	
99	540-057*		INDUCTOR, FXD, 10 UH, 5%, REF: L1,3,5,7	
100	540-147*		INDUCTOR, FXD, 12 UH, 5%, REF: L1,3,5,7	
101	540-061*		INDUCTOR, FXD, 18 UH, 5%, REF: L1,3,5,7	
102	051-338*		INDUCTOR, FXD, 22 UH, 5%, REF: L1,3,5,7	
			*TO BE FACTORY SELECTED IF NECESSARY FOR BEST SECOND HARMONIC ADJUSTMENT. REFERENCE ITEM 54	
				K

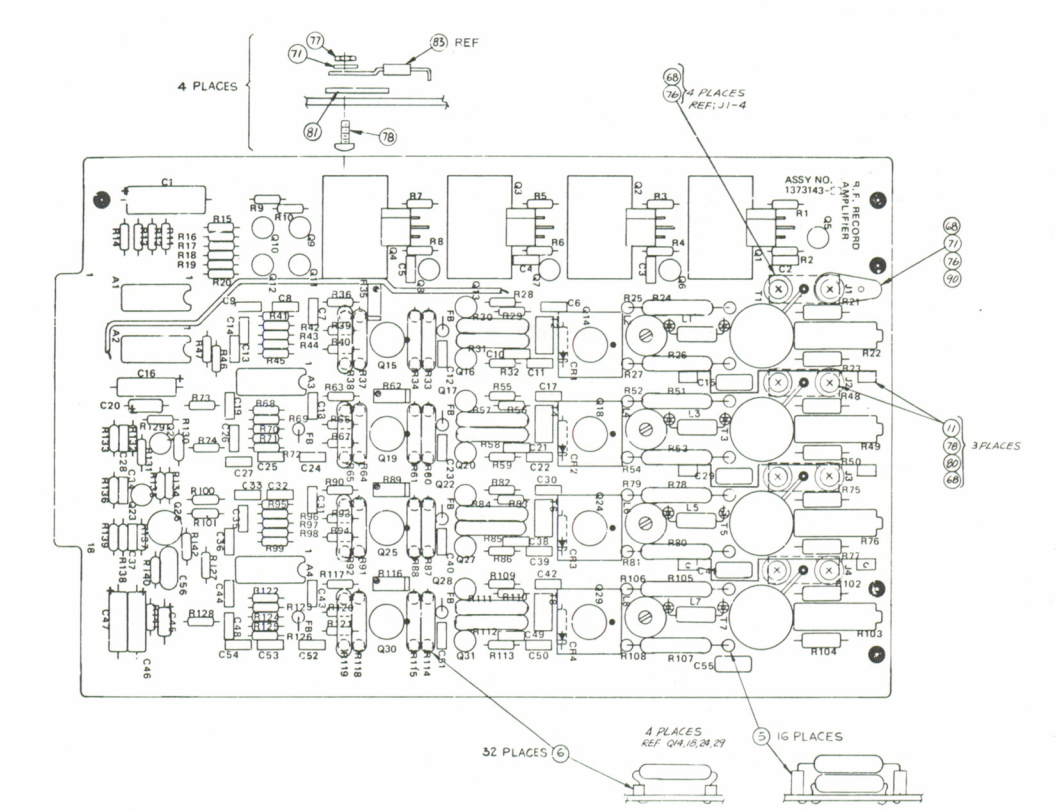

Assembly No. 1373143. RF Record Amplifier PWA

ITEM NO.	AMPEX PART NO.	REFERENCE NUMBER	DESCRIPTION	JEDEC NO. OR MFR. PART NO.
	1373115-05		VIDEO ERASE ASSEMBLY (NHA 1373043)	
1	10627-10		PIN, DOWEL, MODIFIED	
2	1361042-01		POST, TAPE GUIDE	
7	1361175-01		CLAMP	
8	1373001-03		TRANSFORMER, OUTPUT	
9	1373067-01		ERASE HEAD, STACK ASSY	
10	1373293-01		ERASE HEAD PWA	
11	172-215		LUG, RING, NO. 4	
12	4110241-01		LENS	
15	148-048		CONNECTOR, TIP PLUG	
16	166-226		CONTACT, PINS, NO. 24-26 AWG	
17	166-227		CONTACT, PINS, NO. 16-18 AWG	
18	167-024	P5	CONNECTOR, 12 POS	
19	302-380		CLAMP, CABLE	
20	402-023		PIN, DOWEL, 0.187 DIA X 0.625 LG	
21	470-018		SCREW, CAP, HEX, SOC, NO. 6-32 X 3/8 LG	
22	470-020		SCREW, CAP, HEX, SOC, NO. 6-32 X 1/2 LG	
23	470-021		SCREW, CAP, HEX, SOC, NO. 6-32 X 5/8 LG	
24	475-096		SCREW, SEM, XREC, PAN HD, NO. 4-40 X 5/16 LG	
25	501-193		WASHER, FLAT, NO. 4	
26	501-907		WASHER, FLAT, NO. 6	
27	502-003		WASHER, LOCK SPR, NO. 6	
35	1361073-04		COVER, UPPER	
38	1373495-01		SHIELD	
39	1376515-01		IDLER ASSY	
40	1361074-03		COVER, LOWER	
				L

SHEET 1 OF 1

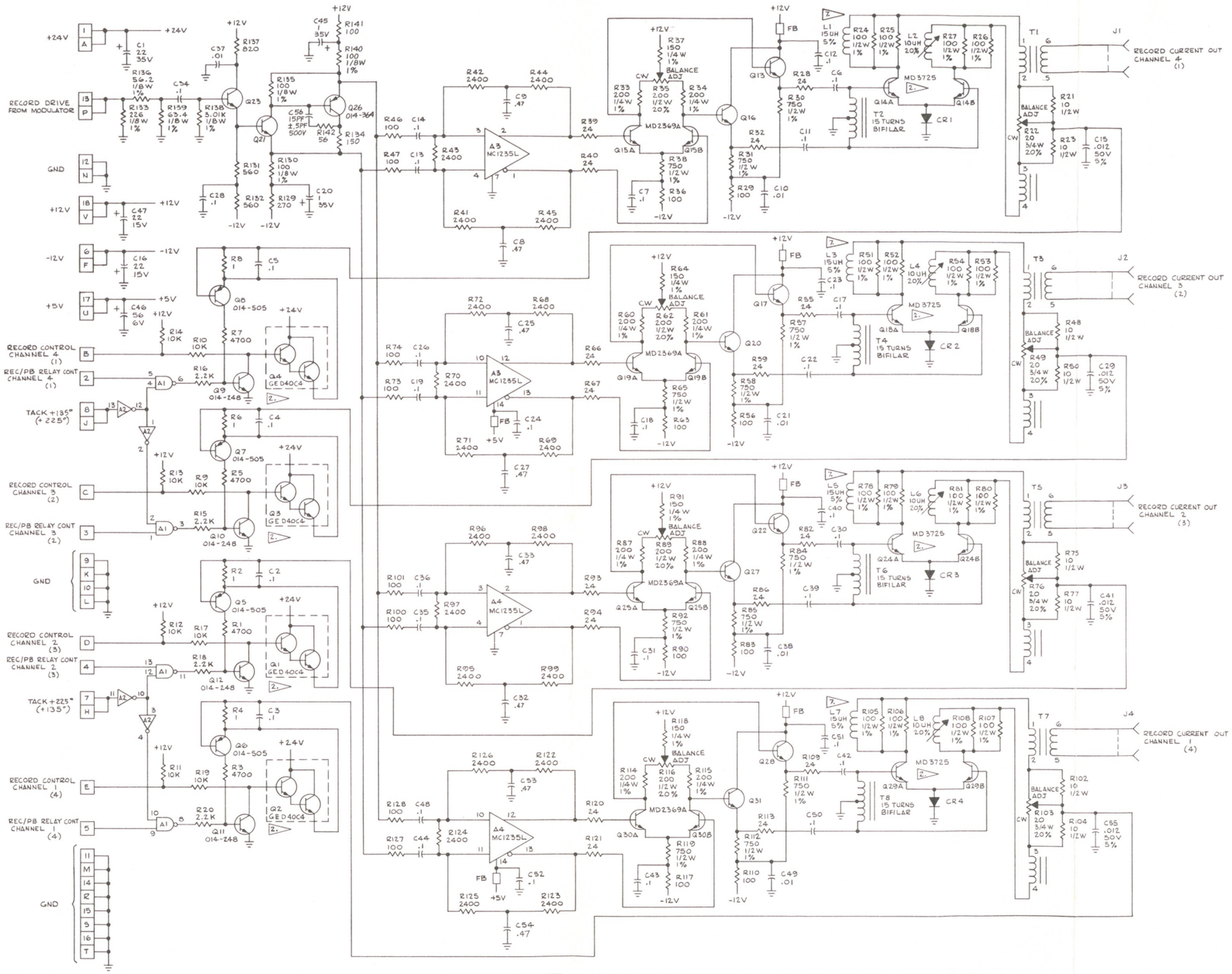

NOTES: UNLESS OTHERWISE SPECIFIED

1. CAPACITANCE VALUES ARE IN MICROFARADS, 100V, 10% .
2. HEATSINK REQUIRED .
3. RESISTANCE VALUES ARE IN OHMS, 1/4W, 5% .
4. TRANSISTORS ARE AMPEX P/N 014-581 .
5. FIGURES INSIDE ( ) FOR AVR-1 & ACR-25 CONNECTIONS ONLY.
6. DIODES ARE AMPEX P/N 013-689 .
7. FACTORY SELECTED, VALUE SHOWN IS NOMINAL .

REFERENCE DESIGNATIONS	
LAST USED	NOT USED
R142	
C56	
Q31	
L8	
T8	
CR4	
A4	
J4	
FB(6)	

FIELD SERVICE COMPONENT SUBST	
AMPEX P/N	NEAREST COM'L EQUIV
013-689	FD600
014-248	2N2222
014-581	2N2369A
014-852	MD2369A
580-636	MD3725
580-657	GE D40C4

I.C. LIST			
REF DESIG	A1	A2	A3,4
AMPEX P/N	586-168	586-326	586-488
VENDOR P/N	SN74H00N	SN7404N	MC1235L
VOLTAGE (PIN)	+5V (14)	+5V (14)	+5V (14)
GROUND PIN	7	7	7

(C)

Schematic No. 1373145.
RF Record Amplifier PWA

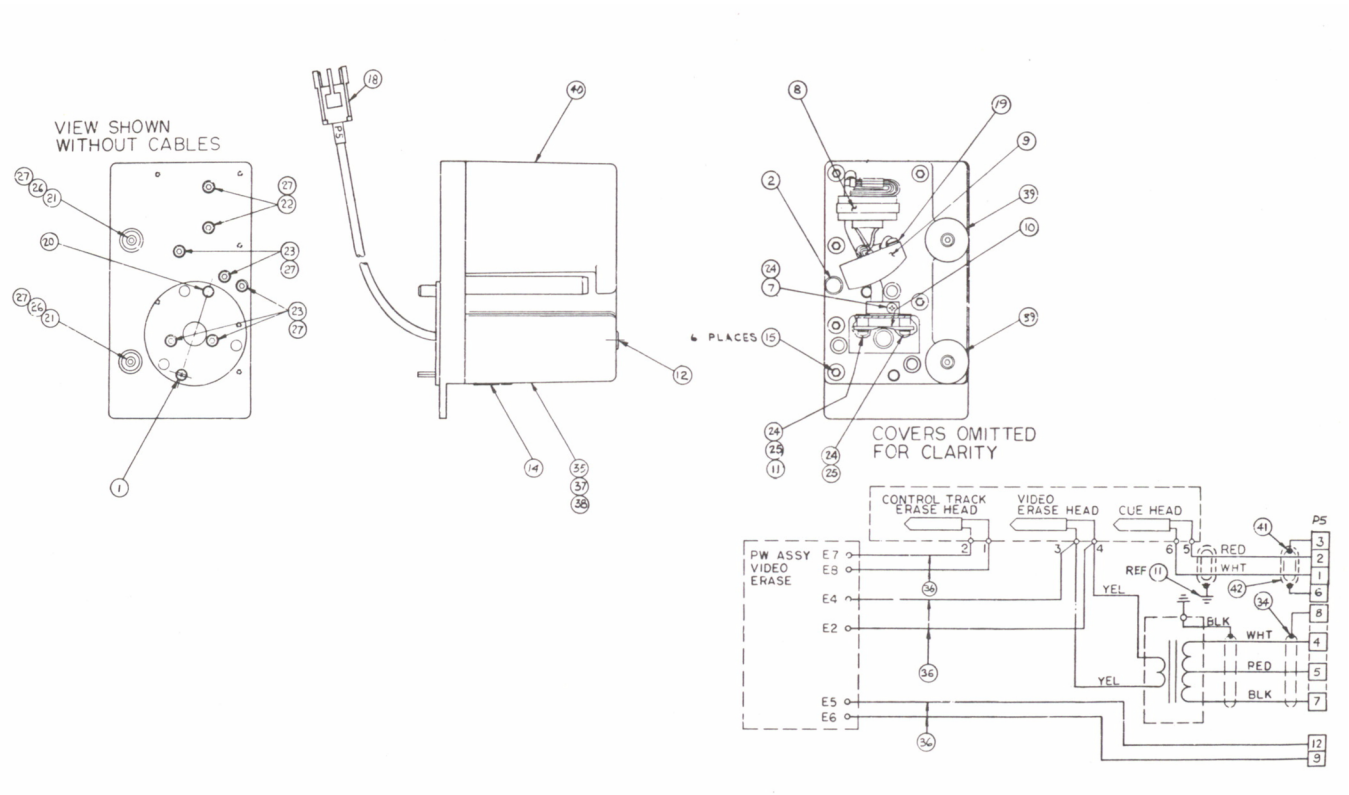

Assembly No. 1373115. Video Erase Assembly

ITEM NO.	AMPEX PART NO.	REFERENCE NUMBER	DESCRIPTION	JEDEC NO. OR MFR. PART NO.
	1373293-01		ERASE HEAD PWA (NHA 1373115)	
3	013-689	CR1	DIODE	FD600
4	020-156	K1	RELAY, DPDT	
5	034-289	C2	CAPACITOR, FXD, MICA, 1200 PF, 500V, 5%	
6	038-988	C1	CAPACITOR, VAR, 170–780 PF	ARCO RC369
8	041-002	R2	RESISTOR, COMP, FXD, 10 OHM, 1/2W, 5%	
11	060-348	DS1	LAMP, 2.5V	D

SHEET 1 OF 1

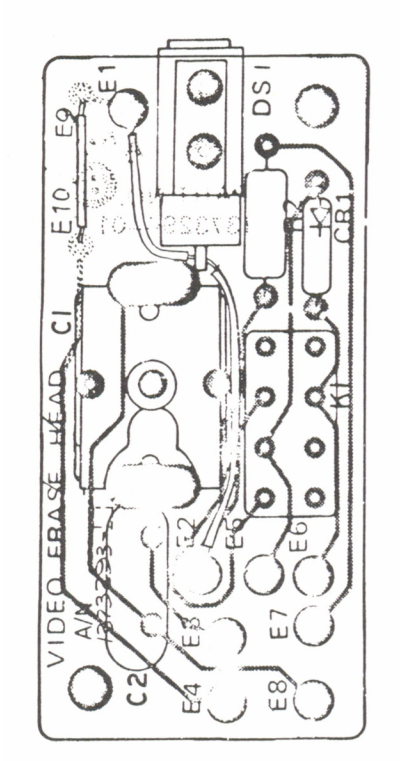

BOARD ASSEMBLY

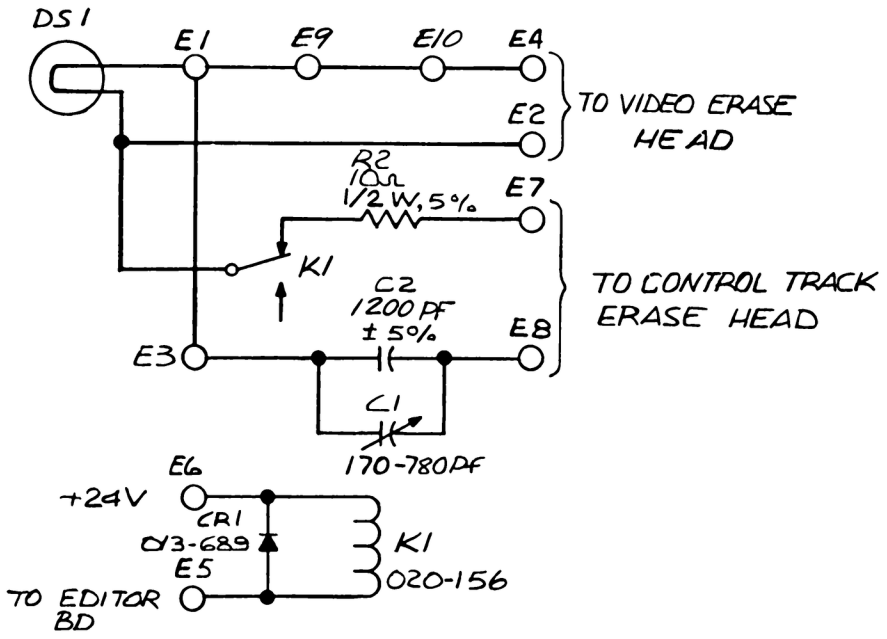

SCHEMATIC

ITEM NO.	AMPEX PART NO.	REFERENCE NUMBER	DESCRIPTION	JEDEC NO. OR MFR. PART NO.
	1373135-03		ERASE DRIVE ASSEMBLY (NHA 1373043)	
1	1373136-01		CHASSIS	
3	1373139		SCHEMATIC	
4	1373137-03		VIDEO ERASE DRIVER PWA	
5	1373305-01		COVER, ERASE DRVR	
6	052-004	FL1,2	FILTER	
7	167-025	J5,6	CONNECTOR, 12 POS,RECP	
8	166-199		CONTACT, SOC, NO. 20-22	
18	471-060		SCREW, MACH, NO. 4-40 X 0.250 LG	
19	473-326		SCREW, ASSEM, NO. 4-40 X 0.375 LG	
20	496-004		NUT, KEP, NO. 4-40	
21	172-004		TERMINAL, LUG, SLDR, NO. 4	
22	476-028		SCREW, SELF TAP, NO. 4-40 X 0.25 LG	
				G

SHEET 1 OF 1

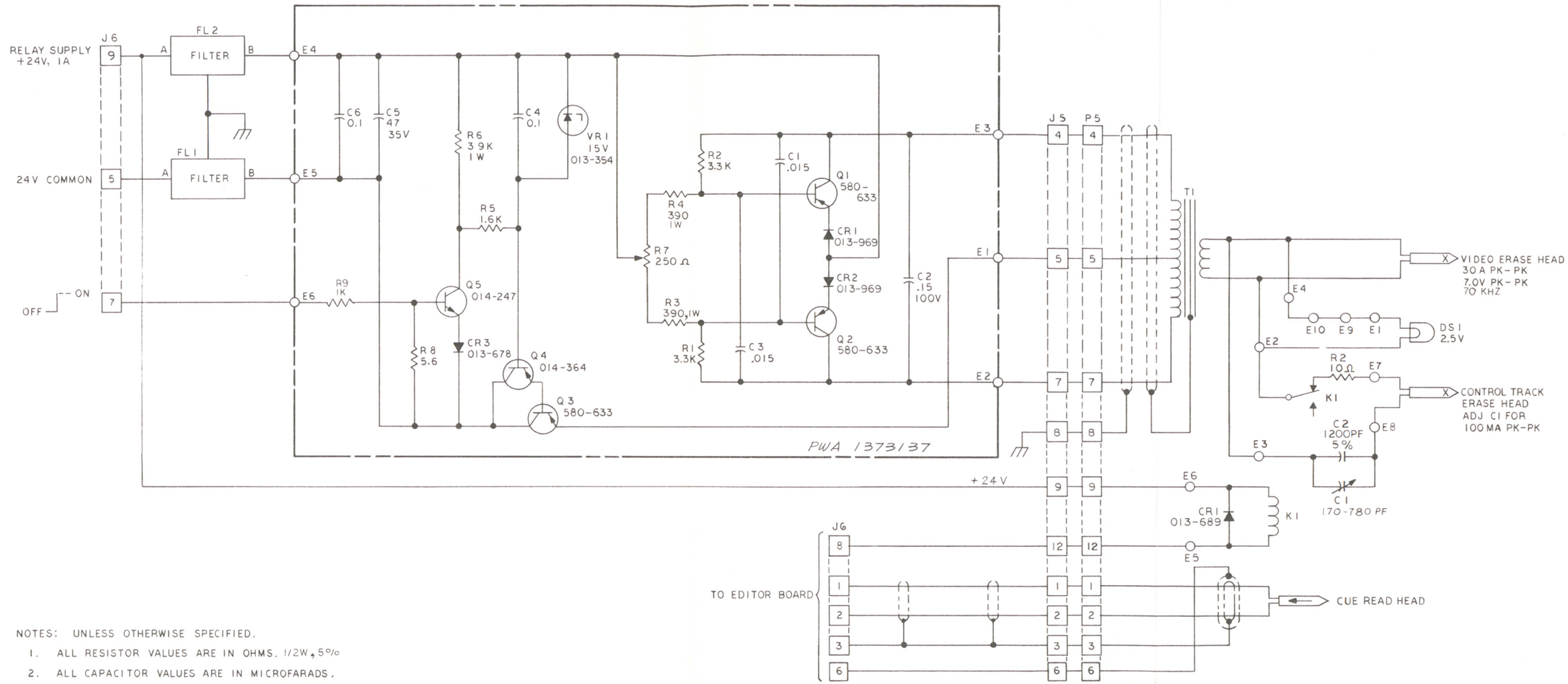

NOTES: UNLESS OTHERWISE SPECIFIED.

1. ALL RESISTOR VALUES ARE IN OHMS. 1/2W, 5%
2. ALL CAPACITOR VALUES ARE IN MICROFARADS.
3. ALL DIODES ARE 013-696.

FIELD SERVICE COMPONENT SUBSTITUTION LIST	
AMPEX P/N	NEAREST COMM. EQUIV.
013-371	CD 32
013-678	IN4385
013-969	MR831
014-247	2N2219
014-364	2N2905
580-633	2N5987

REFERENCE DESIGNATIONS	
LAST USED	NOT USED
C6	
CR3	
E6	
Q5	
R9	
VR1	

F

Schematic No. 1373139.
Erase Assemblies

ITEM NO.	AMPEX PART NO.	REFERENCE NUMBER	DESCRIPTION	JEDEC NO. OR MFR. PART NO.
	1373137-03		VIDEO ERASE DRIVER PWA (NHA 1373135)	
2	1373139		SCHEMATIC	
3	1373286-01		HEATSINK, ERASE DRVR	
6	013-678	CR3	DIODE	1N4385
7	013-969	CR1,2	DIODE	MR831
8	013-354	VR1	DIODE	1N965B
10	014-247	Q5	TRANSISTOR	2N2219
11	014-364	Q4	TRANSISTOR	2N2905
12	580-633	Q1,2,3	TRANSISTOR	2N5987
15	035-817	C1,3	CAPACITOR, MYLAR, 15 UF, 50V	
16	035-893	C4,6	CAPACITOR, MYLAR, 0.1 UF, 50V	
17	037-181	C5	CAPACITOR, TANT, 47 UF, 35V	
18	055-812	C2	CAPACITOR, MYLAR; FOIL, 0.15 UF, 100V	
19	041-331	R1,2	RESISTOR, COMP, 3.3K, 1/2W, 5%	
20	041-245	R9	RESISTOR, 1K, 1/2W, 5%	
21	041-274	R6	RESISTOR, 3.9K, 1W, 5%	
22	041-457	R3,4	RESISTOR, 390 OHM, 1W, 5%	
23	041-357	R8	RESISTOR, 5.6K, 1/2W, 5%	
25	041-526	R5	RESISTOR, 1.6K, 1/2W, 5%	
26	058-885	R7	RESISTOR, VAR, 250 OHM	
28	103307-01		STANDOFF, CMPNT, 0.25 LG	
29	280-998		PAD, MTG, XSTR, T0-5, REF: Q4,5	
31	471-061		SCREW' PAN HD, NO. 4-40 X 0.312 LG	

H

SHEET 1 OF 1

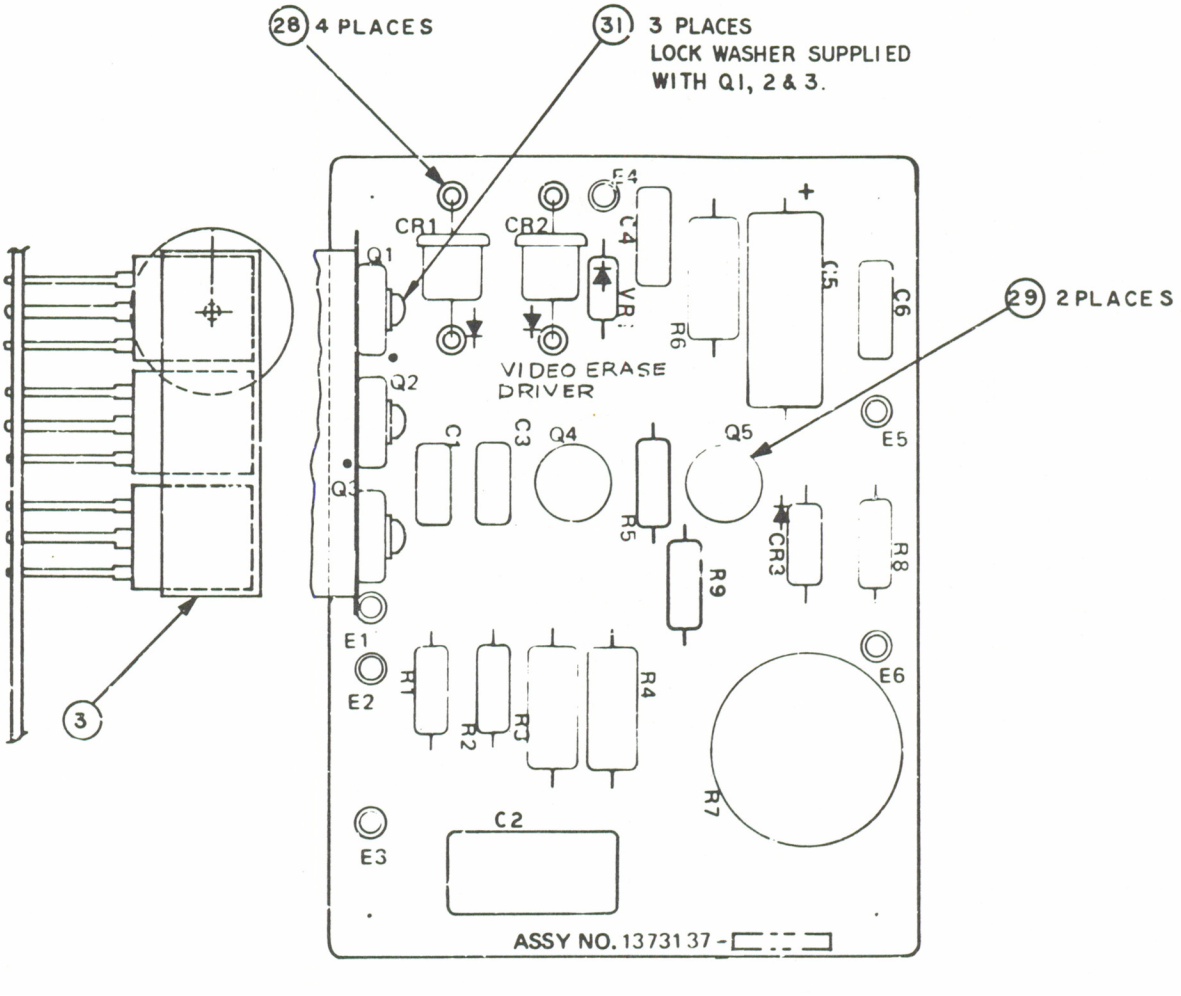

Assembly No. 1373137. Video Erase Driver PWA

ITEM NO.	AMPEX PART NO.	REFERENCE NUMBER	DESCRIPTION	JEDEC NO. OR MFR. PART NO.
	1373189-01		AUDIO HEAD ASSEMBLY (NHA 1373043)	
3	50605-01		POST, GUIDE	
4	50607-01		CAP, GUIDE POST	
5	50608-01		BASE, GUIDE POST	
10	1231139-02		MONITOR HEAD ASSEMBLY	
17	1361160-01		PLUNGER	
18	1361161-01		PLATE, SPR RET	
20	1361191-01		COVER, TOP	
22	1362748-03		SHIELD, FRONT	
28	139-662	J1	CONNECTOR, RECT RECP, 18 PIN	
29	172-004		TERMINAL LUG, SOLDER, RING TONGUE	
30	352-195		SPRING, COMP, 0.300 OD	
31	470-018		SCREW, CAP, HEX SOC, NO. 6–32 X 0.375 LG	
32	470-020		SCREW, CAP, HEX SOC, NO. 6–32 X 0.500 LG	
34	470-029		SCREW, CAP, HEX SOC, NO. 8–32 X 0.500 LG	
36	470-137		SCREW, CAP, HEX SOC, NO. 6–32 X 1.125 LG	
37	471-065		SCREW, MACH, PAN HD, XREC, NO. 4–40 X 0.625 LG	
38	471-476		SCREW, CAP, FLAT, 82° HD, HEX SOC, NO. 6–32 X 0.375 LG	
40	472-469		SCREW, MACH, FLAT 82° HD, XREC, NO. 2–56 X 0.375 LG	
41	473-324		SCREW, MACH, PAN HD, XREC, NO. 4–40 X 0.250 LG	
42	473-326		SCREW, MACH, PAN HD, XREC, NO. 4–40 X 0.375 LG	
43	473-328		SCREW, MACH, PAN HD, XREC, NO. 4–40 X 0.625 LG	
44	492-032		NUT, HEX, NO. 4–40	
46	502-003		WASHER, LOCK, HELI SPR, NO. 6	
47	502-004		WASHER, LOCK, HELI SPR, NO. 8	
58	502-002		WASHER, LOCK, HELI SPR, NO. 4	
59	501-008		WASHER, PLAIN, NO. 4	
				D

SHEET 1 OF 1

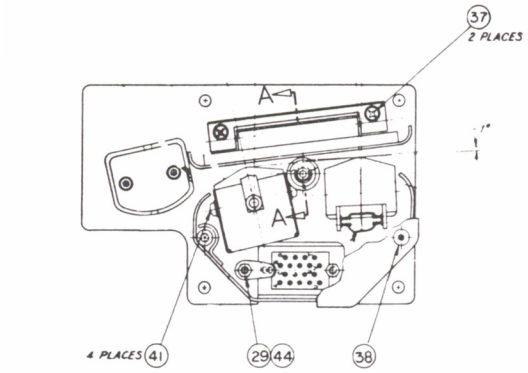

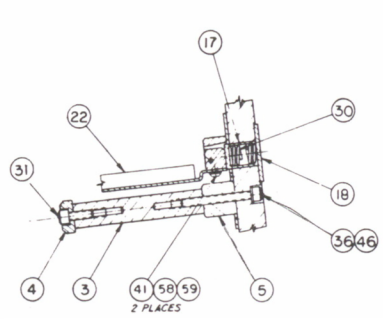

SECTION A–A

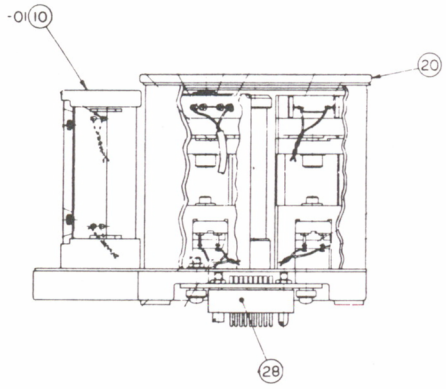

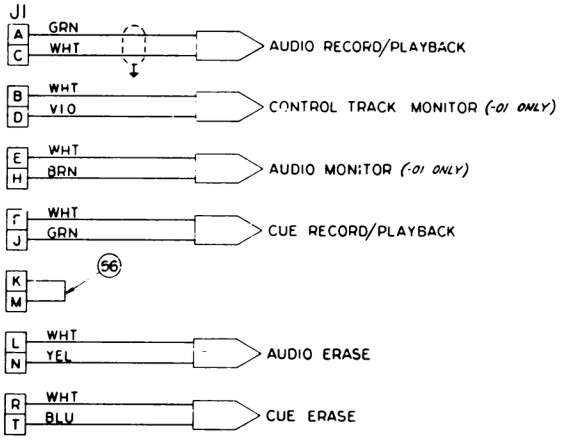

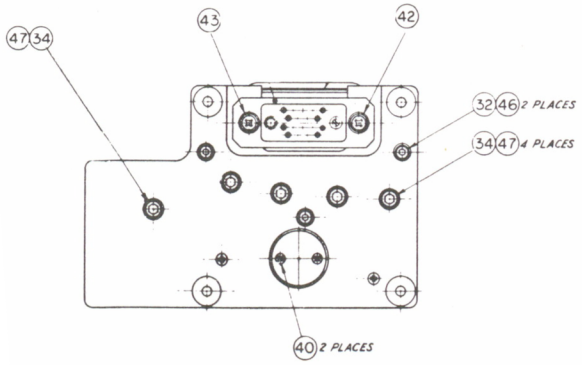

Assembly No. 1373189. Audio Head Assembly

ITEM NO.	AMPEX PART NO.	REFERENCE NUMBER	DESCRIPTION	JEDEC NO. OR MFR. PART NO.
	1373481-01		AUDIO PREAMPLIFIER ASSEMBLY (NHA 1373043)	
1	1373363		WIRING DIAGRAM, TRANSPORT	
2	1373482-01		BRACKET, CONN MTG	
3	1373483-01		CASE, SHIELD	
5	1373485		HARNESS	
6	139-662	P2	CONNECTOR, 18 POS, PLUG	
7	139-663	J2	CONNECTOR, 18 POS, RECPT	
8	143-199	J1	CONNECTOR, 10 POS, DUAL PC	
9	530-189		GUIDE, PC BD	
10	166-200		CONTACT, PIN, 20-22 AWG	
11	166-226		CONTACT, PIN, 24-26 AWG	
12	166-227		CONTACT, PIN, 16-18 AWG	
13	167-024	P11	CONNECTOR, PLUG, 12 POS	
16	280-688		STANDOFF, 0.250 X 0.750, NO. 4-40	
17	302-037		CLAMP, 5/16 IN	
19	471-069		SCREW, PIN HD, XREC, NO. 6-32 X 0.375	
20	473-326		SCREW, SEMS, XREC, NO. 4-40 X 0.375	
21	473-327		SCREW, SEMS, XREC, NO. 4-40 X 0.500	
22	473-355		SCREW, FLAT HD, 100° X 4-40 X 0.375	
24	496-004		NUT, KEP, NO. 4	
25	496-005		NUT, KEP, NO. 6	
26	506-013		WASHER, "D"	
				—

SHEET 1 OF 1

ITEM NO.	AMPEX PART NO.	REFERENCE NUMBER	DESCRIPTION	JEDEC NO. OR MFR. PART NO.
	1373474-05		AUDIO PREAMPLIFIER PWA, MONO (NHA 1373000)	
	1373474-06		AUDIO PREAMPLIFIER PWA, DUAL (NHA 1373000)	
3	1373476		SCHEMATIC, MONO/DUAL	
5	020-485	K1	RELAY (MONO)	
6	020-407		SPACER, RELAY (MONO)	
7	4580199-01	T1	TRANSFORMER (MONO)	
9	013-678	CR1	DIODE (MONO)	2N4385
10	580-135	Q1,2	TRANSISTOR (MONO)	2N4104
12	280-130		SPACER, XSTR (MONO), REF: Q1,2	
14	586-269	A1	INTEGRATED CIRCUIT (MONO)	UA741C
15	035-598	C3	CAPACITOR, MYLAR, 0.047 UF, 50V (MONO)	
16	035-883	C7	CAPACITOR, MYLAR, 0.068 UF, 50V (MONO)	
18	037-957	C2,4,5,6	CAPACITOR, TANT, DIPPED, 68 UF, 15V (MONO)	
19	037-960	C1,8,16	CAPACITOR, TANT, DIPPED, 150 UF, 15V (MONO)	
21	041-425	R1	RESISTOR, COMP, 47 OHM, 1/4W, 5% (MONO)	
22	041-429	R2,12	RESISTOR, COMP, 680 OHM, 1/4W, 5% (MONO)	
23	041-430	R4,14	RESISTOR, COMP, 1.5K, 1/4W, 5% (MONO)	
25	066-027	R13	RESISTOR, MF, 274K, 1/8W, 1% (MONO)	
26	062-624	R8,11	RESISTOR, MF, 1.00K, 1/8W, 1% (MONO)	
28	062-864	R5	RESISTOR, MF, 150 OHM, 1/8W, 1% (MONO)	
30	066-027	R3	RESISTOR, MF, 274K, 1/8W, 1% (MONO)	
31	066-034	R15-17	RESISTOR, MF, 475K, 1/8W, 1% (MONO)	
32	066-387	R9,10	RESISTOR, MF, 53.6K, 1/8W, 1% (MONO)	
33	066-942	R7	RESISTOR, MF, 93.1K, 1/8W, 1% (MONO)	
38	4580199-01	T1,2	TRANSFORMER (DUAL)	
40	020-485	K1,2	RELAY (DUAL)	
41	020-407		SPACER, RELAY (DUAL)	
43	013-678	CR1,2	DIODE (DUAL)	
44	580-135	Q1-4	TRANSISTOR	2N4105
46	280-130		SPACER, XSTR, REF: Q1-4 (DUAL)	
49	586-269	A1,2	INTEGRATED CIRCUIT (DUAL)	UA741C
50	035-598	C3,12	CAPACITOR, MYLAR, 0.047 UF, 50V (DUAL)	
51	035-883	C7,11	CAPACITOR, MYLAR, 0.068 UF, 50V (DUAL)	
53	037-957	C2,4-6,9,10,13,15	CAPACITOR, TANT, DIPPED, 68 UF, 15V (DUAL)	
54	037-960	C1,8,14,16	CAPACITOR, TANT, DIPPED, 150 UF, 15V (DUAL)	
56	041-425	R1,29	RESISTOR, COMP, 47 OHM, 1/4W, 5% (DUAL)	
57	041-429	R2,12,18,28	RESISTOR, COMP, 680 OHM, 1/4W, 5% (DUAL)	
58	041-430	R4,14,20,27	RESISTOR, COMP, 1.5K, 1/4W, 5% (DUAL)	
61	062-624	R8,11,32,34	RESISTOR, MF, 1.00K, 1/8W, 1% (DUAL)	
63	062-864	R5,25	RESISTOR, MF, 150 OHM, 1/8W, 1% (DUAL)	
65	066-027	R3,24	RESISTOR, MF, 274K, 1/8W, 1% (DUAL)	
66	066-034	R15-17,21-23	RESISTOR, MF, 475K, 1/8W, 1% (DUAL)	
67	066-387	R9,10,31,33	RESISTOR, MF, 53.6K, 1/8W, 1% (DUAL)	
68	066-942	R7,30	RESISTOR, MF, 93.1K, 1/8W, 1% (DUAL)	
69	066-027	R13,19	RESISTOR, MF, 274K, 1/8W, 1% (DUAL)	
				C

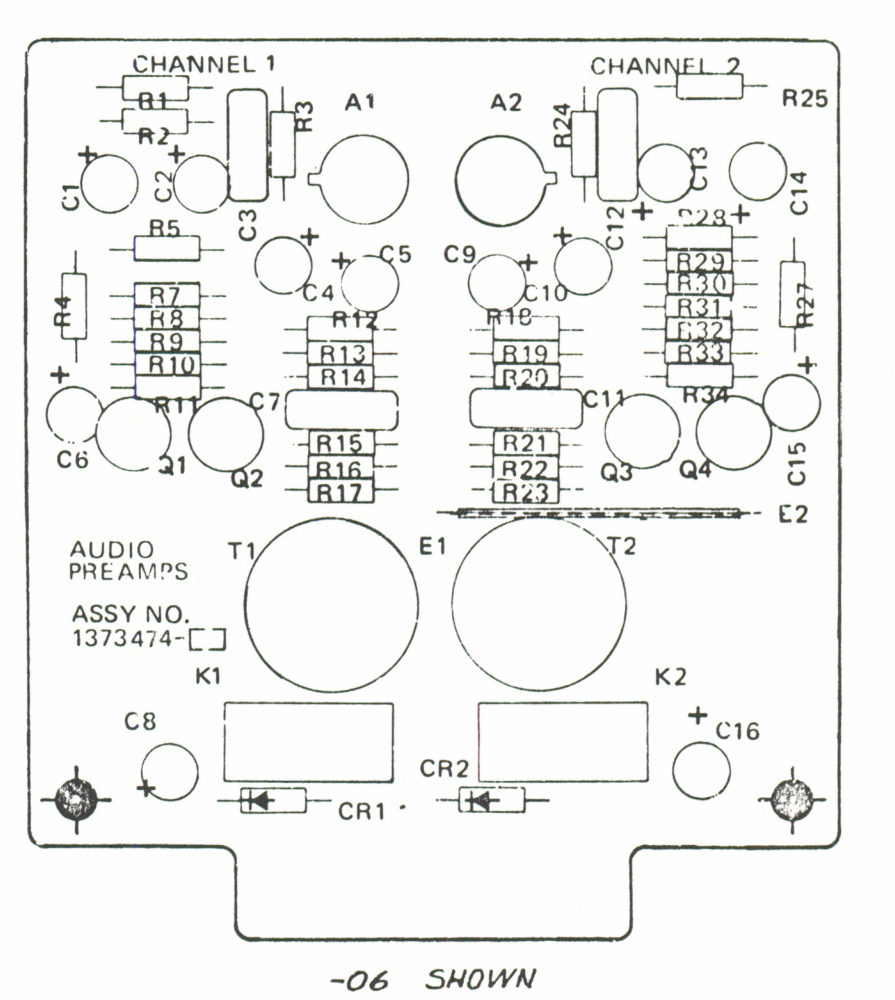

Assembly No. 1373474. Audio Preamplifier PWA

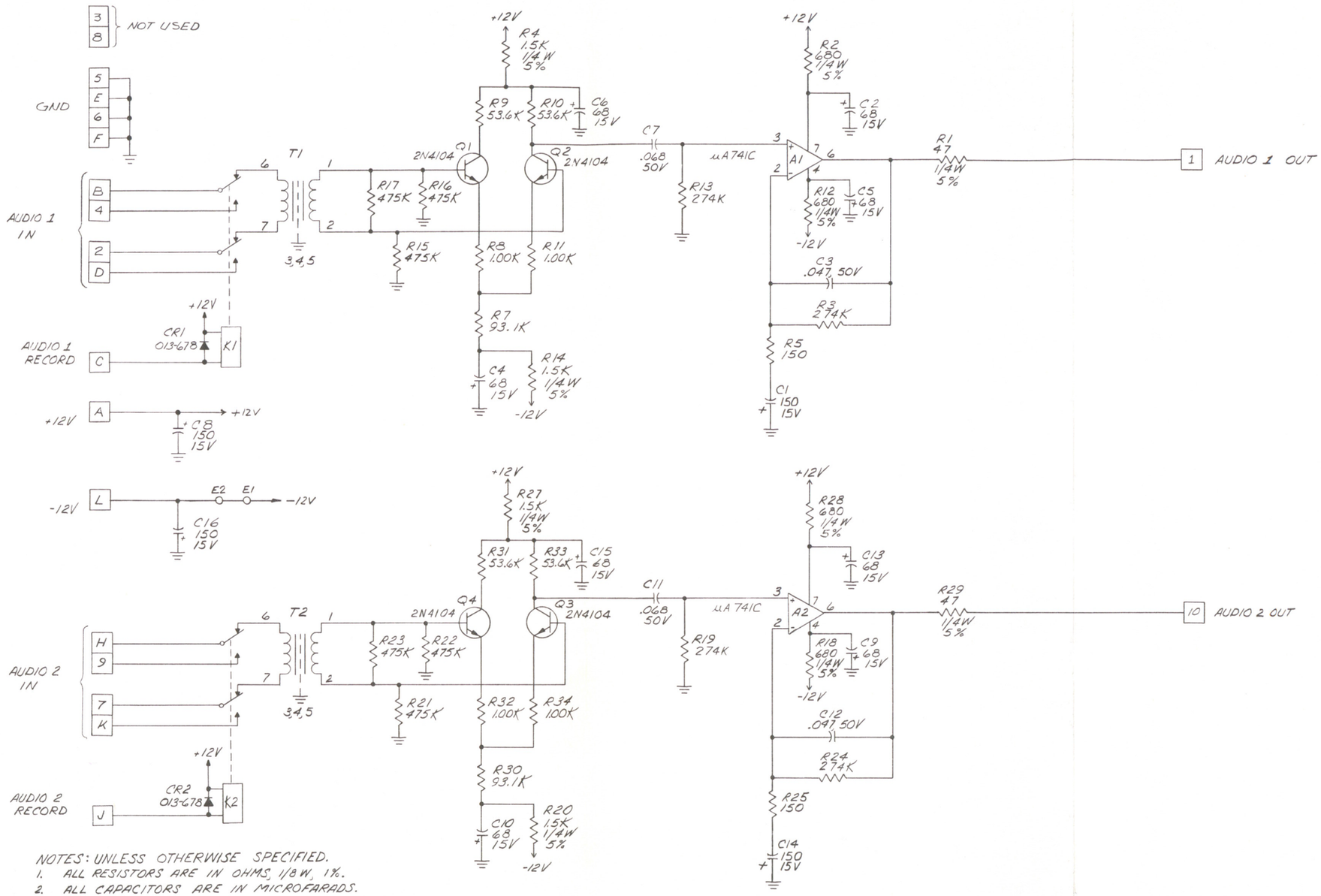

NOTES: UNLESS OTHERWISE SPECIFIED.

1. ALL RESISTORS ARE IN OHMS, 1/8 W, 1%.
2. ALL CAPACITORS ARE IN MICROFARADS.
3. TRANSFORMERS ARE AMPEX PART NO. 4580199-01.
4. CHANNEL 1 USED WITH ASSY NO. 1373474-05.
5. CHANNELS 1&2 USED WITH ASSY NO. 1373474-06.
6. A1 AND A2 ARE AMPEX PART NO. 586-269.
7. Q1,2,3,4 ARE AMPEX PART NO. 580-135.

REFERENCE DESIG.	
LAST USED	NOT USED
A2	
C16	
CR2	
K2	
Q4	
R34	R6, 26
T2	

Interconnect information - see R-5/6 this book

B

AMPEX 1809178-02

Schematic No. 1373476.
Audio Preamplifier PWA, Mono/Dual

7-9/10

ITEM NO.	AMPEX PART NO.	REFERENCE NUMBER	DESCRIPTION	JEDEC NO. OR MFR. PART NO.
	1373036-08		ELECTRONICS ASSEMBLY (NHA 1374840)	
2	1373037-09		ELECTRONICS CHASSIS ASSY	
3	1373038-03		POWER SUPPLY ASSY	
4	1373120-03		POWER SUPPLY PWA, BD NO. 11	
5	1373124-01		+12V -24V REGULATOR PWA	
6	1373153-04		MONITOR SWITCH LOGIC AND COLOR FRAMING DETECTOR PWA, BD NO. 13	
7	1373171-02		HEAD PHASE COMPARATOR PWA, BD NO. 4	
8	1373194-04		CUE PWA, BD NO. 8	
9	1373016-06		HEAD DRIVER PWA, BD NO. 5	
11	1373341-01		ARM, ACTR	
12	1373342		WIRING DIAGRAM	
13	1373478-04		AUDIO PWA, BD NO. 9 AND 10	
14	1373269-05		CONTROL LOGIC PWA, BD NO. 6	
16	1374131-05		A/D CONVERTER A AND B MATCHED ASSYS	
17	1374169-01		BURST STORE GENERATOR, MODULE ASSY, BD NO. 21	
18	1374172-02		MAIN D/A, MODULE ASSY, BD NO. 24	
20	1362955-02		KNOB	
22	470-020		SCREW, CAP, SOC HD, NO. 6-32 X 0.500 LG	
23	470-045		SCREW, CAP, NO. 1/4-20 X 0.50 LG	
24	475-061		SCREW, SEM, NO. 8-32 X 0.50 LG	
26	501-067		WASHER, FLAT, 1/4	
27	501-205		WASHER, FLAT, NO. 8	
28	502-006		WASHER, LOCK, 1/4	

V

SHEET 1 OF 1

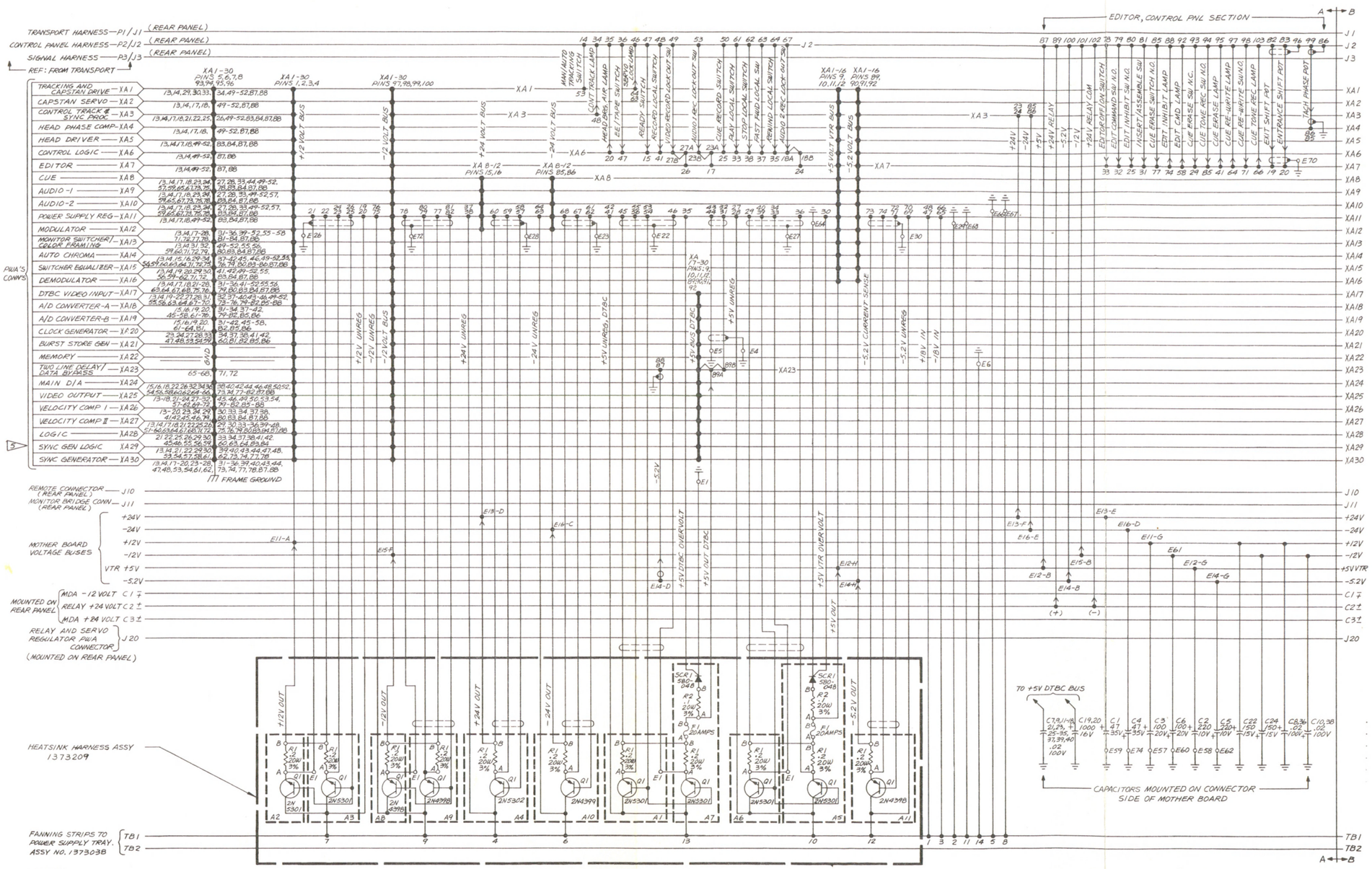

NOTES:

1. ALL NUMBERING OR LETTERING ON ANY GIVEN LINE REPRESENTS CONNECTOR PIN NO.'S, CAPACITOR TERMINALS OR TERMINAL STRIPS EXCEPT AS FOLLOWS:
   1-A. DESIGNATIONS E11 THRU E16(A,B,ETC.), ARE VOLTAGE BUS WIRING CLUSTERS ON THE MOTHER BOARD. ALL OTHER "E" NO.'S ARE GROUND HOLES IN THE MOTHER BOARD FOR SHIELDS, COMPONENT LEADS OR WIRES.
2. CONNECTIONS SHOWN USING HEAVY LINES REPRESENT MOTHER BOARD TRACES OR BUSES.
3. CONNECTIONS SHOWN USING THIN LINES REPRESENT WIRES OR COMPONET LEADS.
4. THE FOLLOWING SYMBOL (A B) REPRESENTS TWO WIRES, "A" AND "B", CONNECTED TO THE SAME PIN NUMBER ON THE MOTHER BOARD.
5. NOT USED WITH NTSC VERSION.
6. PINS 6 & 9 ON P24 ARE JUMPERED AT THE FACTORY WHEN ORDERED WITHOUT AUDIO 2 ACCESSORY KIT NO. 1373384. (SEE SHEET 2, BOTTOM LEFT)
7. WIRING FOR ALL STANDARDS AND ACCESSORIES INCLUDED IN THIS DIAGRAM.

Schematic No. 1373342.
Electronics Wiring Diagram
(Sheet 1 of 5)

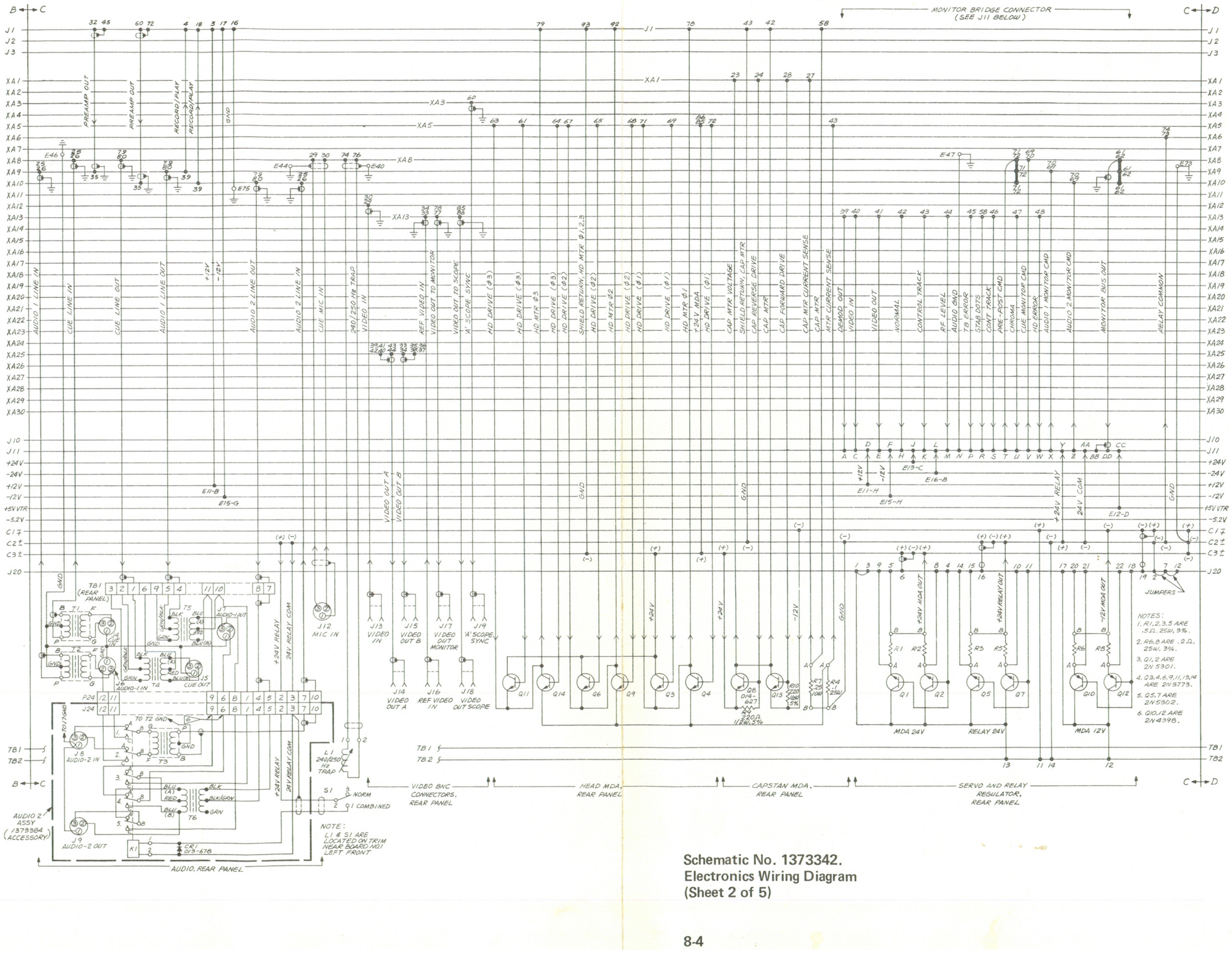

Schematic No. 1373342.
Electronics Wiring Diagram
(Sheet 2 of 5)

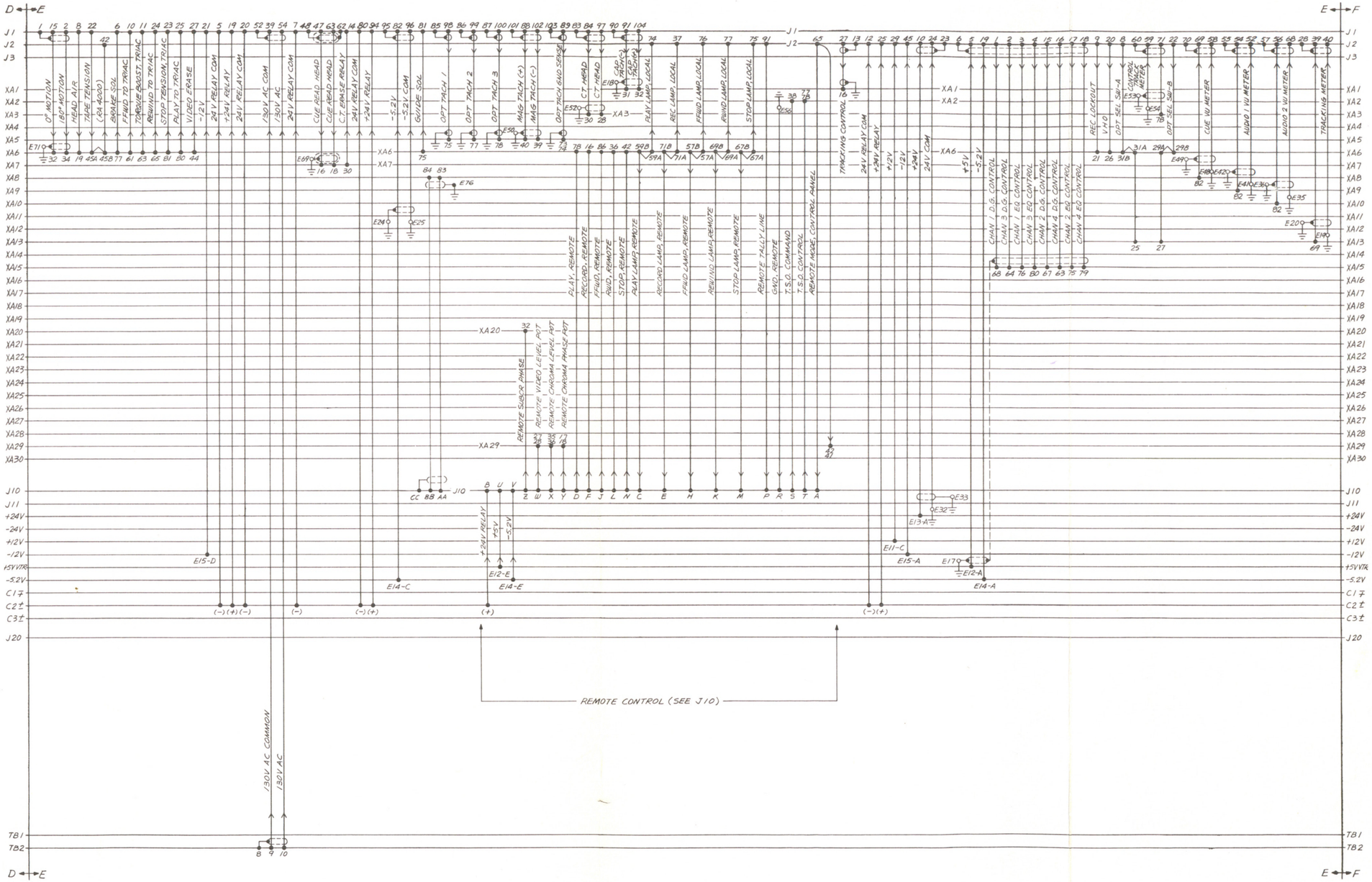

Schematic No. 1373342.
Electronics Wiring Diagram
(Sheet 3 of 5)

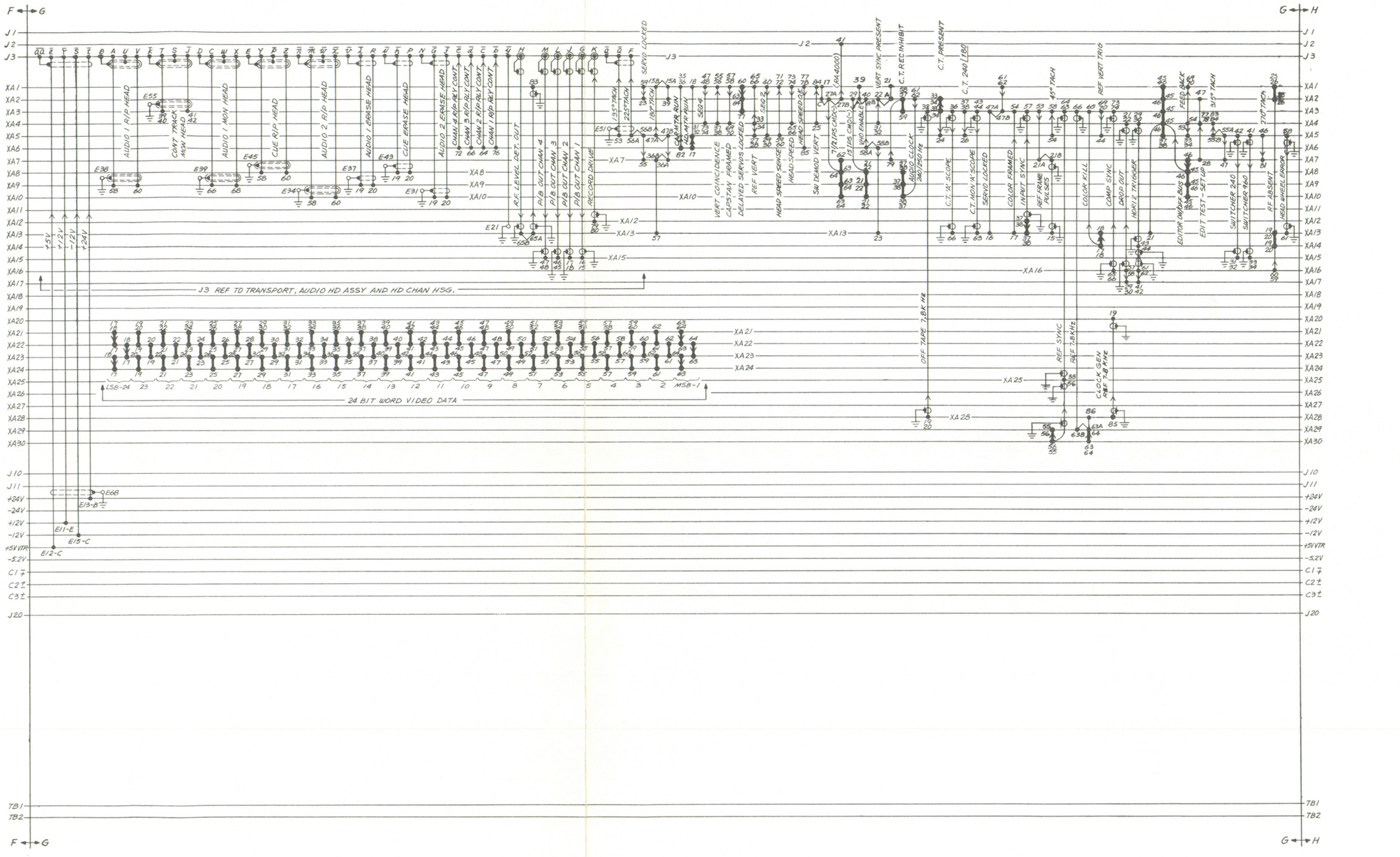

Schematic No. 1373342.
Electronics Wiring Diagram
(Sheet 4 of 5)

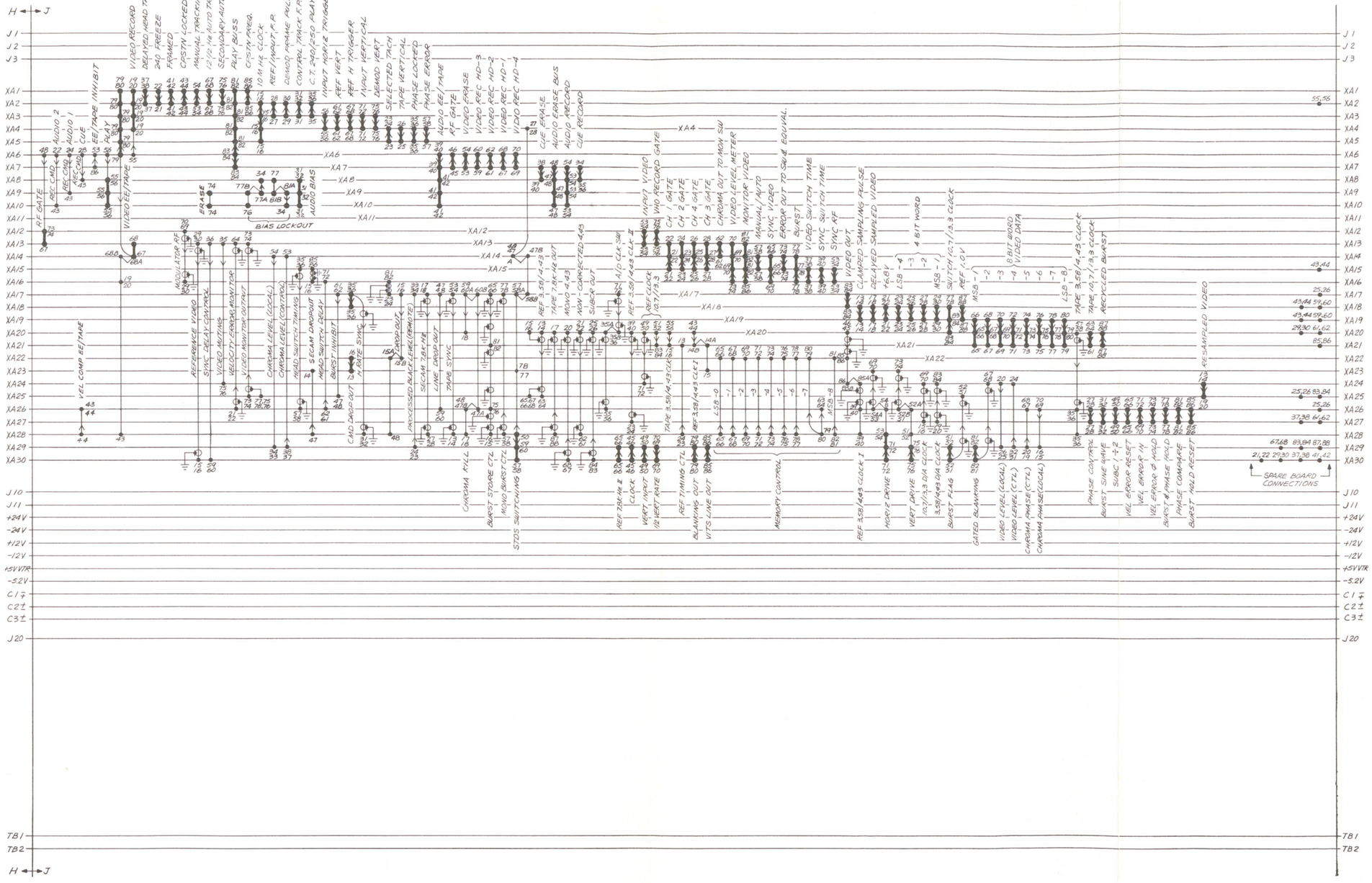

Schematic No. 1373342.
Electronics Wiring Diagram
(Sheet 5 of 5)

G

ITEM NO.	AMPEX PART NO.	REFERENCE NUMBER	DESCRIPTION	JEDEC NO. OR MFR. PART NO.
	1373037-09		ELECTRONICS CHASSIS ASSEMBLY (NHA 1373036)	
1	1373201-02		CARD RACK CHASSIS ASSEMBLY	
3	1373203-01		TRAY, CABLE	
7	475-058		SCREW, SEM, NO. 6-32 X 0.38 LG	
11	501-009		WASHER, FLAT, NO. 6	
12	496-005		NUT, KEP, NO. 6-32	
13	475-061		SCREW, SEM, NO. 8-32 X 0.50 LG	
14	475-062		SCREW, SEM, NO. 6-32 X 0.312 LG	
15	501-205		WASHER, FLAT, NO. 8	
16	506-013		WASHER, "D"	
17	302-195		CLAMP, CABLE, 3/16 ID	
22	1373160-02		TRIM, LEFT, FRONT	
23	1373161-01		TRIM, RIGHT, FRONT	
25	470-572		SCREW, CAP, BTN HD, NO. 6-32 X 0.375 LG	
27	1373428-02		LABEL, AC WIRING	
29	1373202-09		ELECTRONICS HARNESS ASSEMBLY	
				N

SHEET 1 OF 1

ITEM NO.	AMPEX PART NO.	REFERENCE NUMBER	DESCRIPTION	JEDEC NO. OR MFR. PART NO.
	1373201-02		CARD RACK CHASSIS ASSEMBLY (NHA 1373037)	
1	1373004-01		GUIDE, PWB	
4	1373228-01		STRIP, GND	
7	250-189		BUMPER	RBRCRAFT NO. 4538
8	470-047		SCREW, CAP, NO. 1/4-20 X 0.750	
9	496-006		NUT, KEP, NO. 8-32	
10	501-205		WASHER, FLAT	
11	502-024		WASHER, LOCK, INT TOOTH, NO. 4	
12	473-324		SCREW, MACH, PAN HD, XREC, NO. 4-40 X 0.25 LG	
13	471-336		SCREW, MACH, FLAT HD, NO. 6-32 X 0.38	
14	501-067		WASHER, FLAT' 0.25 ID	
16	501-009		WASHER, FLAT, NO. 6	
17	496-005		NUT, KEP, NO. 6-32	
18	430-509		RING, RET, SELF LOCKING	
19	502-003		WASHER, LOCK, SPR, NO. 6	
24	460-541		RIVET, POP, 0.156 DIA, 0.187 GRIP	
25	471-069		SCREW, PAN HD, NO. 6-32 X 0.38	
				D

SHEET 1 OF 1

ITEM NO.	AMPEX PART NO.	REFERENCE NUMBER	DESCRIPTION	JEDEC NO. OR MFR. PART NO.
	1373202-09		ELECTRONICS HARNESS ASSEMBLY (NHA 1373037)	
2	1373342		WIRING DIAGRAM, MAIN ELECTRONICS	
8	471-071	J3	SCREW, PAN HD, XREC, NO. 6-32 X 0.500	
10	475-058		SCREW, SEM, NO. 6-32 X 0.375	
11	470-010		SCREW, CAP, NO. 4-40 X 0.38 LG	
12	496-005		NUT, KEP, NO. 6-32	
13	496-004		NUT, KEP, NO. 4-40	
14	501-009		WASHER, FLAT, NO. 6-32	
15	041-004	R9,10	RESISTOR, FXD, 220 OHM, 1/2W, 5%	
16	280-003		SPACER, 0.25 OD X 0.25 LG	
18	302-366		STRAP, TIE, 15.0 LG	
19	302-355		STRAP, TIE, 6.7 LG	
25	1373208-04		MAIN ELECTRONICS HARNESS	
26	1373123-03		REAR PANEL ASSEMBLY	
27	1373210-06		MOTHERBOARD ASSEMBLY	
28	1373209-03		HEATSINK HARNESS ASSEMBLY	
				J

SHEET 1 OF 1

ITEM NO.	AMPEX PART NO.	REFERENCE NUMBER	DESCRIPTION	JEDEC NO. OR MFR. PART NO.
	1373208-04		MAIN ELECTRONICS HARNESS (NHA 1373202)	
1	1373222-01	L1	BRACKET, INDUCTOR	
2	143-120	J10	CONNECTOR, 26 POS, RECPT	
3	166-199		CONTACT, SOC, 20-22 AWG	
4	166-200		CONTACT, PIN, 20-22 AWG	
5	166-224		CONTACT, SOC, 24-26 AWG	
6	166-225		CONTACT, SOC, 16-18 AWG	
7	166-226		CONTACT, PIN, 24-26 AWG	
8	166-227		CONTACT, PIN, 16-18 AWG	
9	167-036	J3	CONNECTOR, 48 POS, RECPT	
12	541-037	L1	INDUCTOR, VAR	HVC-8
13	169-649	J3	CONTACT, COAX	
14	167-024	P24	CONNECTOR, 12 POS, PLUG	
15	169-719	J11	CONNECTOR, 34 POS, RECPT	
17	180-883	TB2	STRIP, FANNING, 8 POS, 90°	
19	1373435-02	J2	CONNECTOR, 104 POS, RECPT (MODIFIED)	
23	169-816	J1	CONNECTOR, 104 POS, RECPT	
35	1373470-01		TIE, CLAMP, HARNESS	
52	473-331		SCREW, SEM, NO. 6-32 X 0.50	
53	496-004		NUT, KEP, NO. 4-40	
54	496-005		NUT, KEP, NO. 6-32	

G

SHEET 1 OF 1

ITEM NO.	AMPEX PART NO.	REFERENCE NUMBER	DESCRIPTION	JEDEC NO. OR MFR. PART NO.
	1373209-03		HEATSINK HARNESS ASSEMBLY (NHA 1373202)	
1	1373109-01	A1-11	HEATSINK	
2	1373267-01		PLATE, SCR, MTG	
3	014-573		KIT, MTG, XSTR, REF: SCR1	
4	014-703		WASHER, MICA, XSTR	
5	1373122		SCHEMATIC	
6	059-337	R2	RESISTOR, 0.1 OHM, 20W, 3%	
7	059-487	R1	RESISTOR, 0.2 OHM, 20W, 3%	
8	1373342		WIRING DIAGRAM, MAIN ELECTRONICS	
9	070-303	F1	FUSE, 20 AMP, FAST BLOW	
12	302-379		TIE, STRAP, NO. 2, 0.14 X 5.4	
13	302-335		TIE, STRAP, NO. 1, 0.09 X 4.0	
14	130-004		FUSEHOLDER	
15	173-628		TERMINAL, STUD TURRET, REF: A1,3,5,9	
16	185-026	TB1	STRIP, FANNING, 14 POS, 90°	
17	471-061		SCREW, PAN HD, XREC, NO. 4-40 X 0.31	
18	472-456		SCREW, PAN HD, XREC, NO. 2-56 X 1/2	
19	475-062		SCREW, PAN HD, ASSEM, NO. 6-32 X 5/8	
20	476-505		SCREW, SELF-TAP, NO. 4-40 X 1/4	
21	472-454		SCREW, PAN HD, XREC, NO. 2-56 X 0.38	
22	492-007		NUT, NO. 2-56, 0.188 AF	
23	496-004		NUT, KEP, NO. 4-40	
24	502-001		WASHER, SPR LOCK, NO. 2-56	
25	502-025		WASHER, INT LOCK, NO. 6	
26	580-048	SCR1	THYRISTOR, SCR	
27	580-244	Q1	TRANSISTOR, REF: A1-3,5-7	2N5301
28	580-246	Q1	TRANSISTOR, REF: A8,9,11	2N4398
29	580-510		SOCKET, XSTR, T0-3	
35	580-245	Q1	TRANSISTOR, REF: A10	2N4399
36	580-428	Q1	TRANSISTOR, REF: A4	2N5302
45	064-314	A5C1,A7C1	CAPACITOR, MONO, 1 UF, 50V, 20%	

F

SHEET 1 OF 1

ITEM NO.	AMPEX PART NO.	REFERENCE NUMBER	DESCRIPTION	JEDEC NO. OR MFR. PART NO.
	1373210-06		MOTHERBOARD ASSEMBLY (NHA 1373202)	
1	1373357-01		STRAP, GND	
2	1373213-01		BRACKET, BD MT	
3	1373358-01		STRAP, VOLTAGE, 12V	
10	280-808		STANDOFF, NYLON, 0.750 LG X 0.375 DIA	
11	472-453		SCREW, PAN HD, XREC, NO. 2-56 X 0.312	
12	473-326		SCREW, SEM, PAN HD, XREC, NO. 4-40 X 0.375	
14	475-058		SCREW, SEM, PAN HD, XREC, NO. 6-32 X 0.375	
15	492-007		NUT, PLAIN, NO. 2-56	
16	501-008		WASHER, FLAT, NO. 4	
17	501-155		WASHER, FLAT, NO. 2	
18	501-188		WASHER, FLAT, NO. 6	
19	502-023		WASHER, LOCK, NO. 2	
20	503-054		WASHER, FLAT, NO. 2, NYLON	
23	1373230-04		MOTHERBOARD, DTBC PWA	
26	1373233-05		MOTHERBOARD, VTR PWA	
27	471-063		SCREW, PAN HD, XREC, NO. 4-40 X 0.437 LG	
28	496-004		NUT, KEP, NO. 4-40	
29	1373236-05		HARNESS, MOTHERBOARD INTCON	J

SHEET 1 OF 1

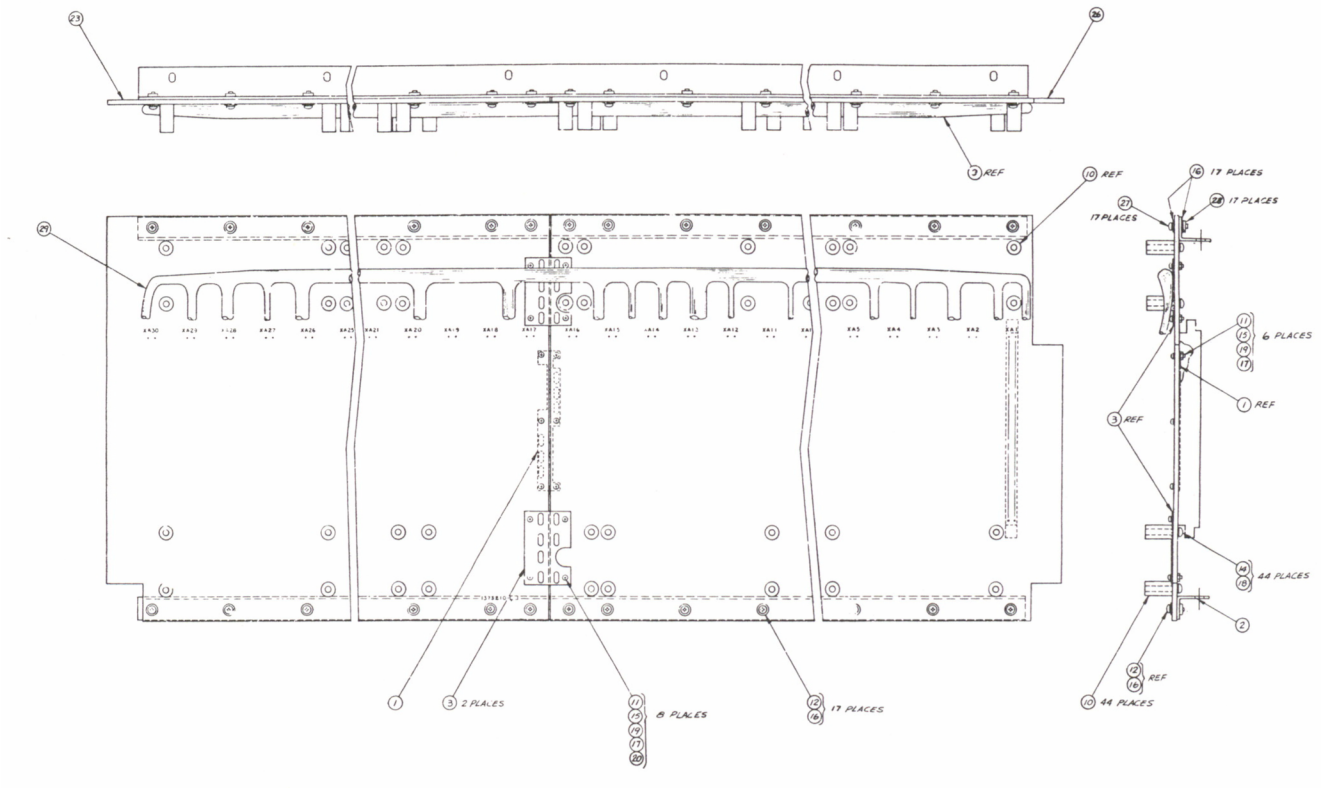

ITEM NO.	AMPEX PART NO.	REFERENCE NUMBER	DESCRIPTION	JEDEC NO. OR MFR. PART NO.
	1373230-04		MOTHERBOARD DTBC PWA (NHA 1373210)	
5	030-056	C7-18,21,23, 25-40	CAPACITOR, CER, 0.02 MFD, 100V, 20%	
7	037-507	C22,24	CAPACITOR, TANT, 150 MFD, 15V, 10%	
9	033-247	C19,20	CAPACITOR, AL, 1000 MFD, 16V, -10 +100%	
11	139-688	XA17-30	CONNECTOR, PCB, 50 PIN, DUAL	
				F

SHEET 1 OF 1

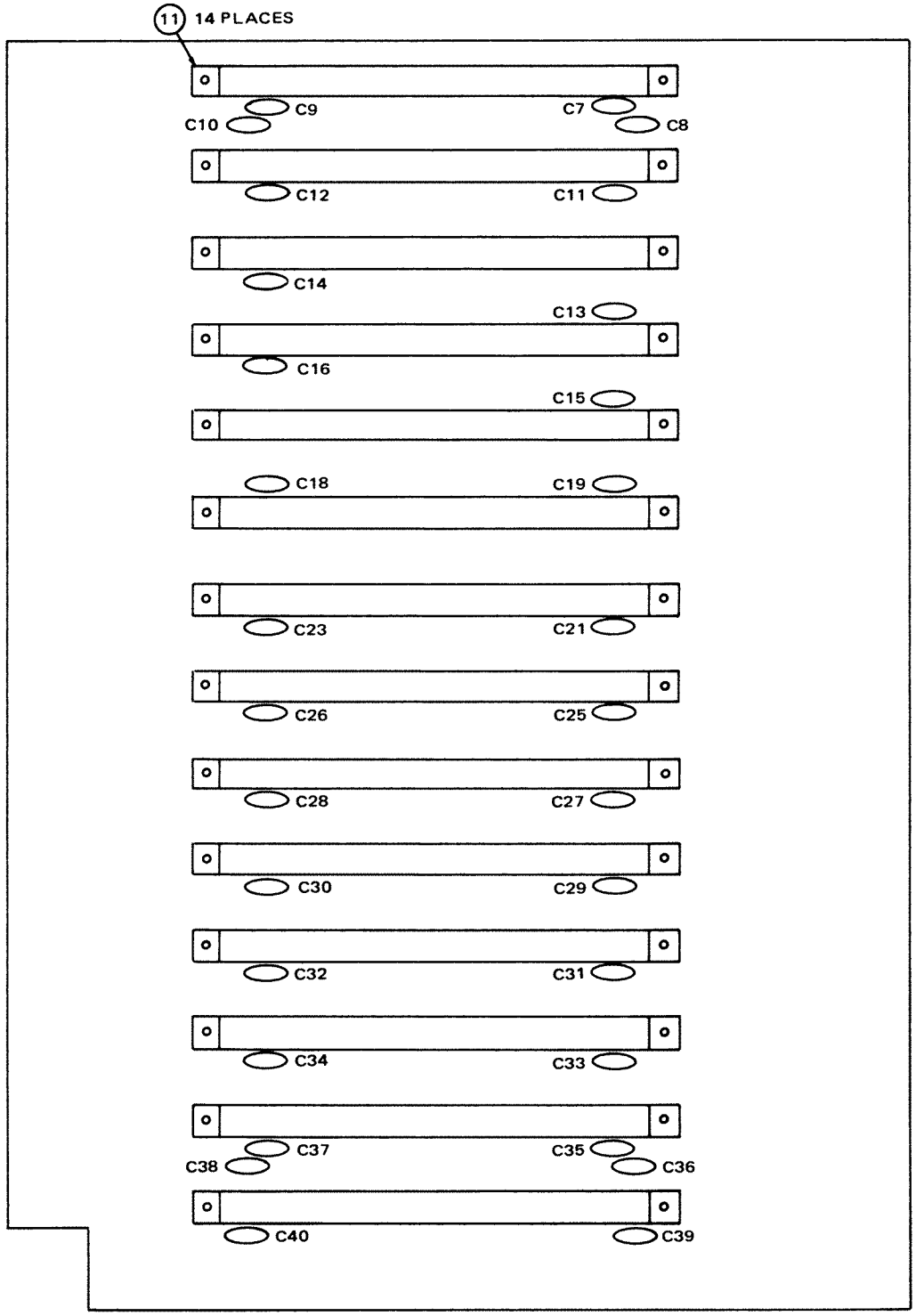

Assembly No. 1373230. Motherboard DTBC PWA

ITEM NO.	AMPEX PART NO.	REFERENCE NUMBER	DESCRIPTION	JEDEC NO. OR MFR. PART NO.
	1373233-05		MOTHERBOARD VTR PWA (NHA 1373210)	
2	139-688	XA1-16	CONNECTOR, 50 POS, DUAL, PC	
3	037-181	C1,4	CAPACITOR, TANT, 47 UF, 35V	
4	037-237	C2,5	CAPACITOR, TANT, 220 UF, 10V	
5	037-620	C3,6	CAPACITOR, TANT, 100 UF, 20V	
				H

SHEET 1 OF 1

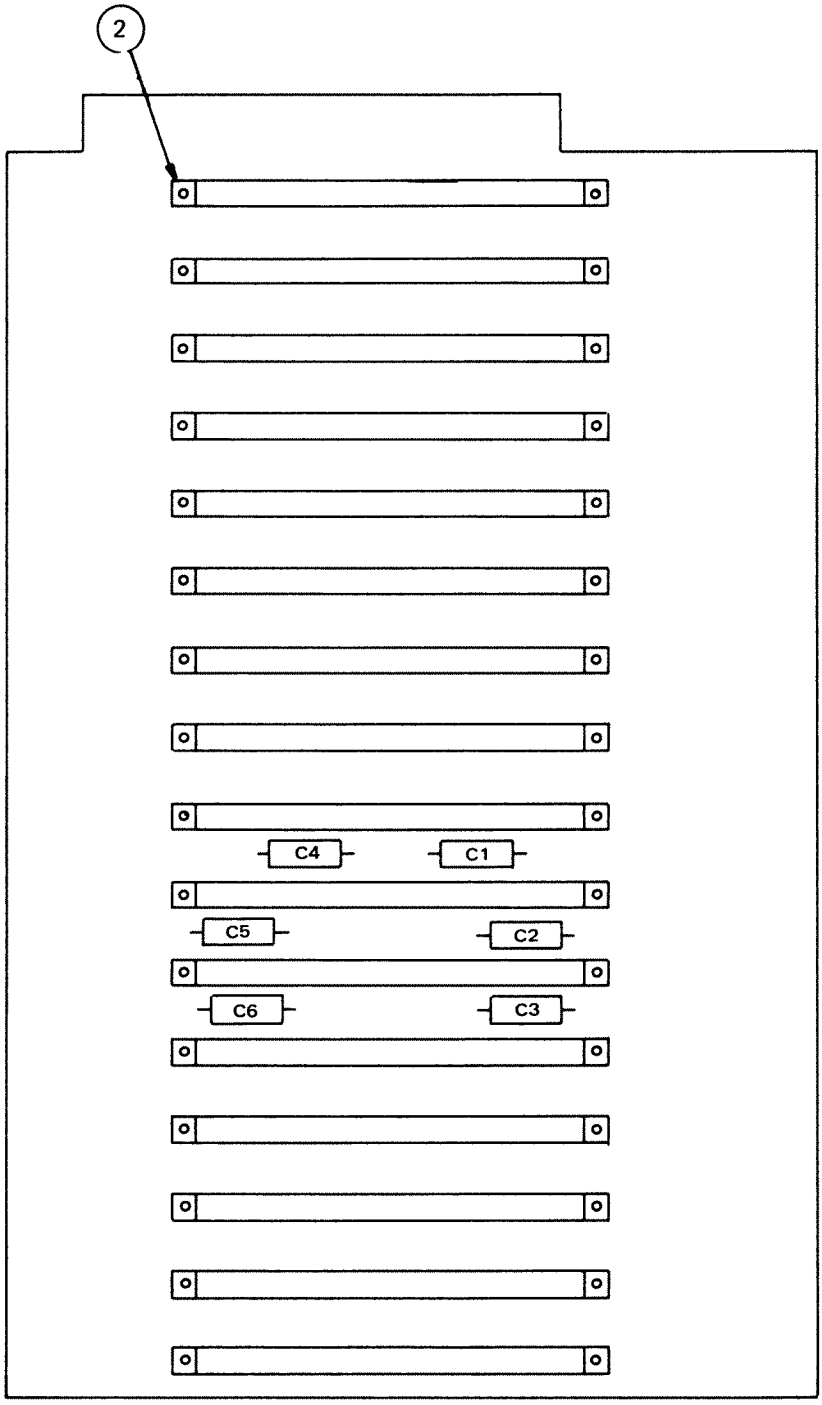

Assembly No. 1373233. Motherboard VTR PWA

ITEM NO.	AMPEX PART NO.	REFERENCE NUMBER	DESCRIPTION	JEDEC NO. OR MFR. PART NO.
	1373123-03		REAR PANEL ASSEMBLY (NHA 1373202)	
3	1214756-01		TERMINAL, DUO	
4	014-703		INSULATOR, MICA	
5	014-627	Q8	TRANSISTOR	2N3791
6	014-660	Q3,4,6,9,11,13,14	TRANSISTOR	2N3773
7	059-262	R6,8	RESISTOR, FXD, 0.2 OHM, 25W, 3%	
8	043-387	R4	RESISTOR, FXD, 0.1 OHM, 25W, 3%	
9	047-748	R7	RESISTOR, FXD, 0.25 OHM, 25W, 3%	
10	063-079	C1-3	CAPACITOR, 2600 MFD, 40V	
11	143-174	J13-19	CONNECTOR, CHASSIS MT, BNC, INSUL	
14	180-594	TB1	TERMINAL STRIP, 12 TERM	
15	301-130		BRACKET, CAP, 1.375 IN	
16	476-505		SCREW, SELF TAP, NO. 4-40 X 0.250 LG	
19	580-428	Q1,2,5,7	TRANSISTOR	2N5302
20	580-246	Q10,12	TRANSISTOR	2N4398
21	580-510		SOCKET, XSTR	
22	580-644		COVER, XSTR, T0-3	
23	172-004		LUG, SOLDER, NO. 4	
25	471-061		SCREW, PAN HD, NO. 4-40 X 0.312 LG	
26	471-062		SCREW, PAN HD, NO. 4-40 X 0.375 LG	
28	471-069		SCREW, PAN HD, NO. 6-32 X 0.375 LG	
29	471-329		SCREW, FLAT HD, NO. 4-40 X 0.437 LG	
30	473-326		SCREW, SEM, NO. 4-40 X 0.375 LG	
31	473-331		SCREW, SEM, NO. 6-32 X 0.500 LG	
32	492-032		NUT, SM PATT, NO. 4-40	
33	496-004		NUT, KEP, NO. 4-40	
34	496-005		NUT, KEP, NO. 6-32	
35	492-008		NUT, PLAIN, NO. 4-40	
36	502-002		WASHER, LOCK, SPR, NO. 4	
38	501-008		WASHER, PLAIN, NO. 4	
39	146-998	J4,6,12	CONNECTOR, AUDIO INPUT	
40	147-999	J5,7	CONNECTOR, AUDIO OUTPUT	
41	560-085	T1,2	TRANSFORMER	A16
42	560-398	T4,5	TRANSFORMER	TA-11
43	047-881	R1,2,3,5	RESISTOR, FXD, 0.5 OHM, 25W, 3%	
44	168-086	J20	CONNECTOR, PCB, 20 POS	
45	302-355		TIE,STRAP, BASE, MED	
46	471-067		SCREW, PAN HD, NO. 6-32 X 0.25	
47	492-034		NUT, NO. 6-32, SP	
48	501-710		WASHER, FLAT, NO. 4,NYLON	
49	502-025		WASHER, LOCK, NO. 6, INT LOCK	
50	1211910-10		TERMINAL, QUAD	

F

SHEET 1 OF 1

ITEM NO.	AMPEX PART NO.	REFERENCE NUMBER	DESCRIPTION	JEDEC NO. OR MFR. PART NO.
	1373038-03		POWER SUPPLY ASSEMBLY (NHA 1373036)	
1	1373054-01		TRANSFORMER	
2	1373140-03		CHASSIS ASSEMBLY	
4	1373122		SCHEMATIC	
12	1373211-02		HEATSINK RECTIFIER ASSEMBLY	
14	472-594		SCREW, SEM, 1/4-20 X 0.63	
17				
15	475-062		SCREW, SEM, NO. 6-32 X 0.63	
17	476-553		SCREW, SELF-TAP, NO. 6-32 X 0.38	
18	492-467		NUT, NO. 1/4 X 20	
19	501-009		WASHER, FLAT, NO. 6	
20	501-067		WASHER, FLAT, 1/4 ID	
21	502-006		WASHER, LOCKING, 1/4 ID	
22	501-205		WASHER, FLAT, NO. 8	
23	496-006		NUT, KEP, NO. 8-32	
24	471-077		SCREW, PAN HD, NO. 8-32 X 0.31	
28	302-049		CLAMP, CA, 0.5 ID	
29	473-327		SCREW, SEM, PAN HD, NO. 4-40 X 0.50 LG	
30	1373142-03		POWER SUPPLY HARNESS	
				G

SHEET 1 OF 1

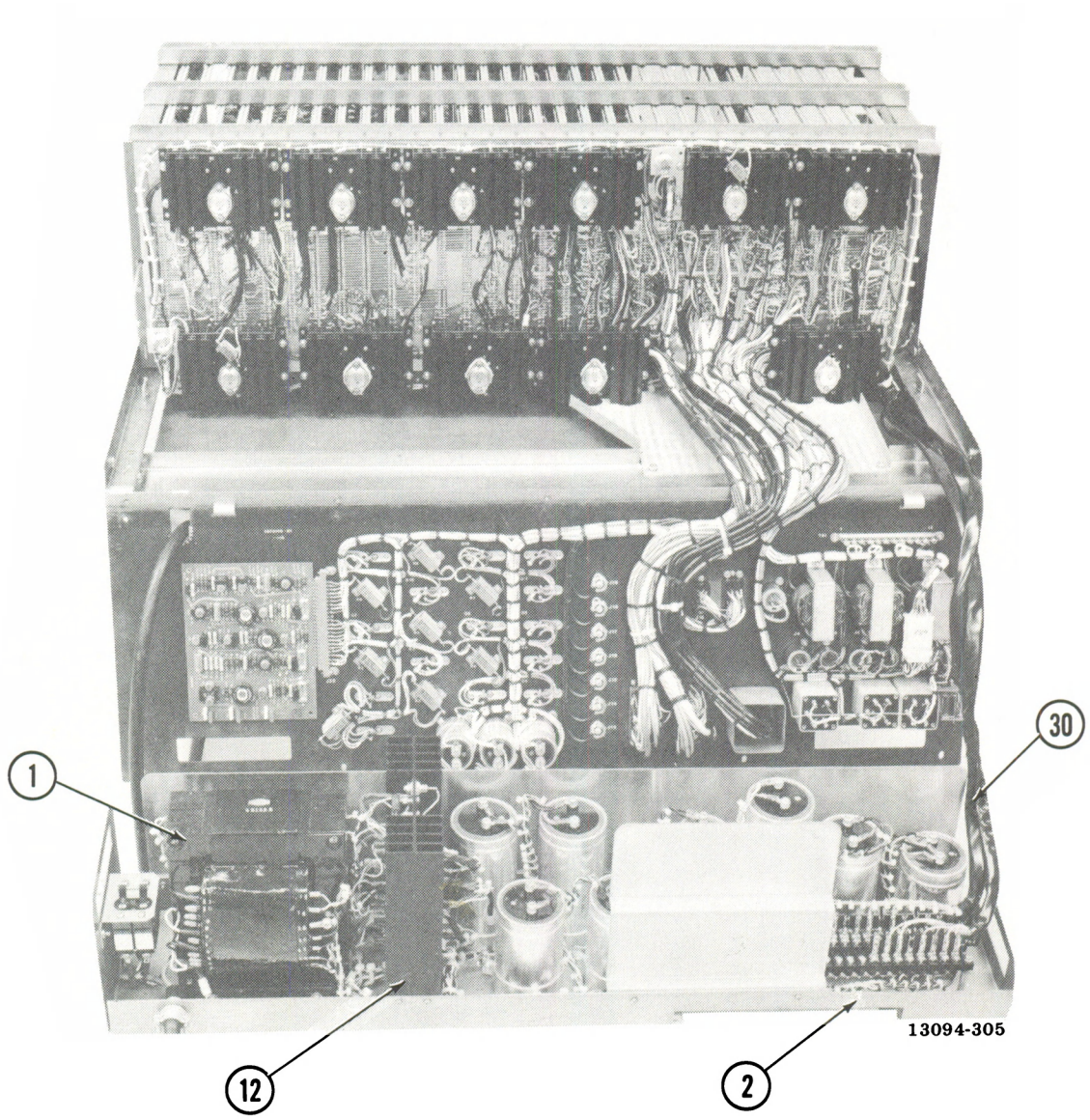

Assembly No. 1373038. Power Supply Assembly

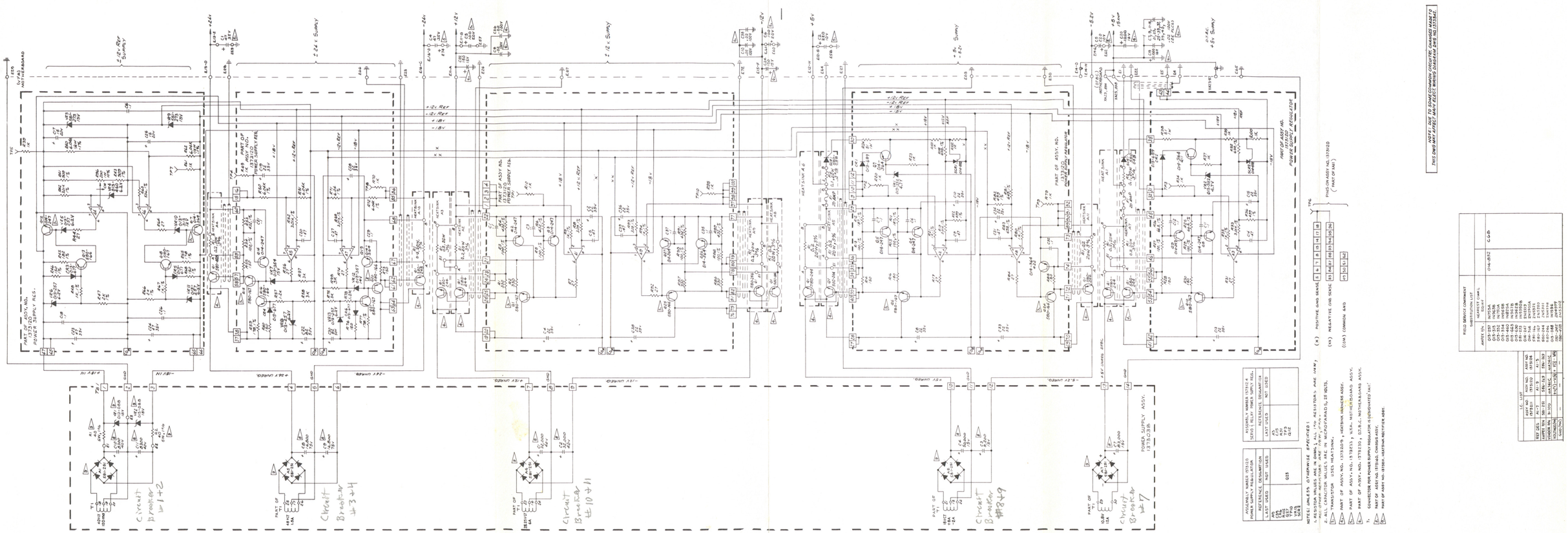

Schematic No. 1373122.
Power Supply Assembly (Sheet 1 of 2)

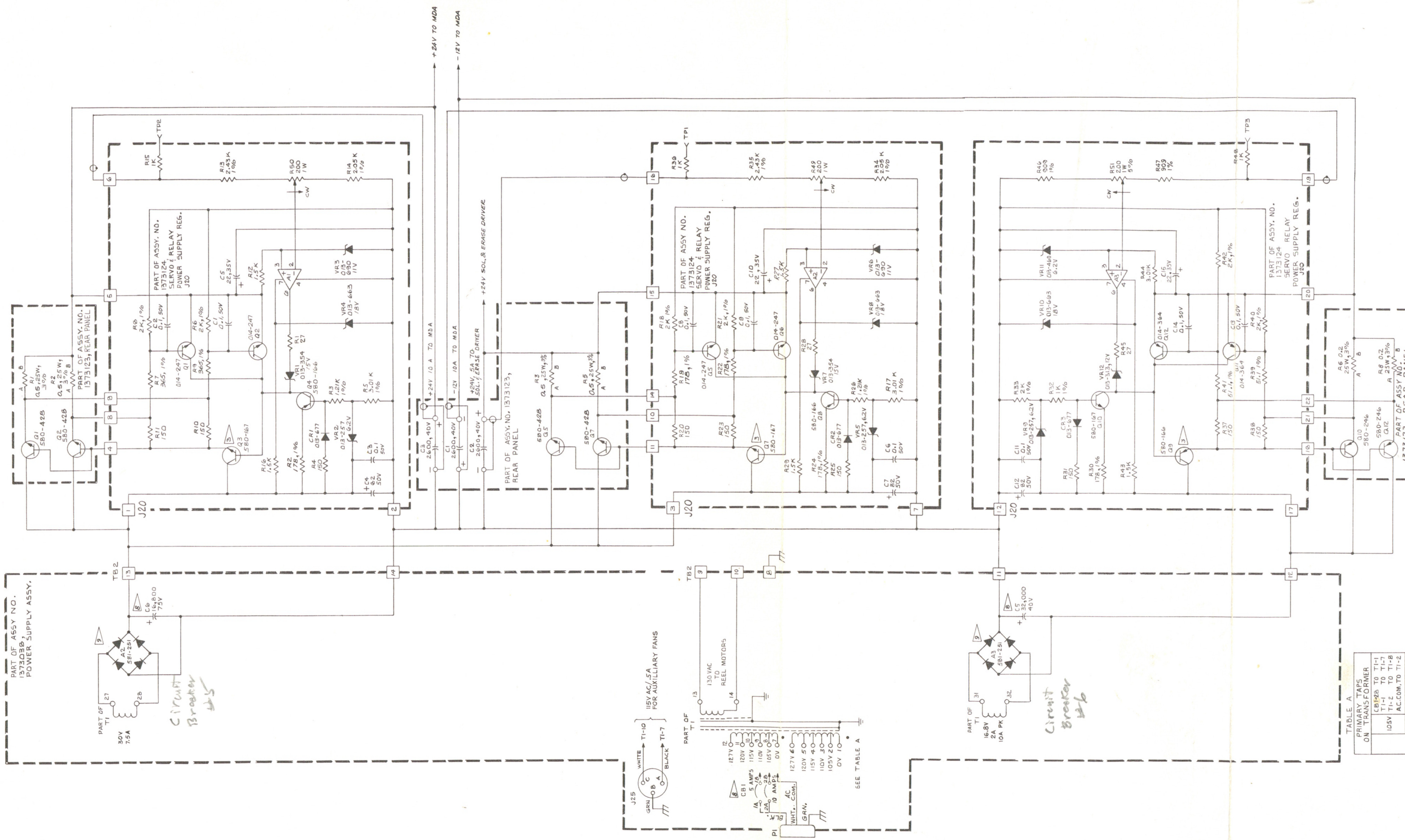

TABLE A
PRIMARY TAPS ON TRANSFORMER

10 AMPS	105V	CB1-2B TO T1-1 T1-1 TO T1-7 T1-2 TO T1-8 A.C.COM. TO T1-2
	110V	CB1-2B TO T1-1 T1-1 TO T1-7 T1-3 TO T1-9 A.C.COM. TO T1-3
	115V	CB1-2B TO T1-1 T1-1 TO T1-7 T1-4 TO T1-10 A.C.COM. TO T1-4
	120V	CB1-2B TO T1-1 T1-1 TO T1-7 T1-5 TO T1-11 A.C.COM. TO T1-5
	127V	CB1-2B TO T1-1 T1-1 TO T1-7 T1-6 TO T1-12 A.C.COM. TO T1-6
5 AMPS	210V	CB1-1B TO T1-1 T1-2 TO T1-7 A.C.COM. TO T1-8
	220V	CB1-1B TO T1-1 TB1-3 TO T1-7 A.C.COM. TO T1-9
	230V	CB1-1B TO T1-1 T1-4 TO T1-7 A.C.COM. TO T1-10
	240V	CB1-1B TO T1-1 T1-5 TO T1-7 A.C.COM. TO T1-11
	254V	CB1-1B TO T1-1 T1-6 TO T1-7 A.C.COM. TO T1-12

E

Schematic No. 1373122.
Power Supply Assembly (Sheet 2 of 2)

ITEM NO.	AMPEX PART NO.	REFERENCE NUMBER	DESCRIPTION	JEDEC NO. OR MFR. PART NO.
	1373211-02		HEATSINK RECTIFIER ASSEMBLY (NHA 1373038)	
6	1373108-02		HEATSINK, RECT	
7	013-088	VR1,2	DIODE	1N1596
9	047-230	R1,2	RESISTOR, WW, 40 OHM, 5W, 1%	
10	173-628		STANDOFF, THDED	
11	187-054	E3	TERMINAL, FEED THRU	
12	471-074		SCREW, PAN HD, NO. 6-32 X 0.875 LG	
13	471-448		SCREW, PAN HD, NO. 6-32 X 1.250 LG	
15	492-009		NUT, PLAIN, NO. 6-32	
17	501-009		WASHER, NO. 6	
19	502-003		WASHER, SPR LOCK	
23	581-251	A1-7	DIODE, RECT BRIDGE	

E

SHEET 1 OF 1

ITEM NO.	AMPEX PART NO.	REFERENCE NUMBER	DESCRIPTION	JEDEC NO. OR MFR. PART NO.
	1373142-03		POWER SUPPLY HARNESS (NHA 1373038)	
2	084-026		CORD, PWR, AC,14 AWG	
3	139-793	J25	CONNECTOR, CIR RECPT, 3 POS	
4	171-007		LUG, CRIMP, NO. 10, RING, 16-14 AWG	
7	171-044		LUG, CRIMP, NO. 6, RING, 16-14 AWG	
8	171-178		LUG, CRIMP, NO. 10, RING, 20-18 AWG	
9	171-238		TERMINAL, QIK DISCONNECT, 22-18 AWG	
10	172-218		LUG, CRIMP, 8 RING, 16-14 AWG	
11	171-105		LUG, CRIMP, 1/4 RING, 16-14 AWG	
12	173-492		TERMINAL, QIK DISCONNECT, 16-14 AWG	
13	171-027		LUG, CRIMP, 1/4 RING, 22-18 AWG	
14	180-884		TERMINAL STRIP,BARR	
16	302-335		STRAP, CABLE	
17	302-379		STRAP, CABLE	
				E

SHEET 1 OF 1

ITEM NO.	AMPEX PART NO.	REFERENCE NUMBER	DESCRIPTION	JEDEC NO. OR MFR. PART NO.
	1373140-03		CHASSIS ASSEMBLY (NHA 1373038)	
3	1373324-01		BRACKET, CB	
5	063-076	C3	CAPACITOR, AL, 9200 MFD, 15V	
6	063-080	C10,11	CAPACITOR, AL, 8300 MFD, 40V	
7	063-258	C1,2,5	CAPACITOR, AL, 32,000 MFD, 40V	
8	063-249	C4	CAPACITOR, AL, 50,000 MFD, 15V	
9	063-250	C7	CAPACITOR, AL, 83,000 MFD, 15V	
10	063-251	C6,8,9	CAPACITOR, AL, 16,800 MFD, 75V	
11	126-306	CB1	CIRCUIT BREAKER, 15/7.5 AMP, 250V	
13	280-402		SPACER, THD, PLAIN, NO. 6-32 AF X 1.5 LG	
14	280-492		SPACER, THD, PLAIN, NO. 6-32 AF X 0.687 LG	
15	280-495		SPACER, THD, PLAIN, NO. 4-40 AF X 1.500 LG	
16	290-108	C4	BRACKET, CAP, 2.0 IN	
17	290-120	C1,2,5-9	BRACKET, CAP, 2.5 IN	
18	301-130	C3,10,11	BRACKET, CAP, 1.375 IN	
19	302-104		FITTING, CND, CA CLP, 1/2 IN	
20	471-065		SCREW, PAN HD, NO. 4-40 X 5/8	
21	471-072		SCREW, PAN HD, NO. 6-32 X 5/8	
22	475-058		SCREW, SEM, PAN HD, NO. 6-32 X 3/8	
23	475-085		SCREW, SEM, PAN HD, NO. 6-32 X 5/16	
24	473-327		SCREW, SEM, PAN HD, NO. 4-40 X 0.50 LG	
25	496-004		NUT, KEP, NO. 4-40	
26	496-005		NUT, KEP, NO. 6-32	
28	501-009		WASHER, FLAT, NO. 6	
				E

SHEET 1 OF 1

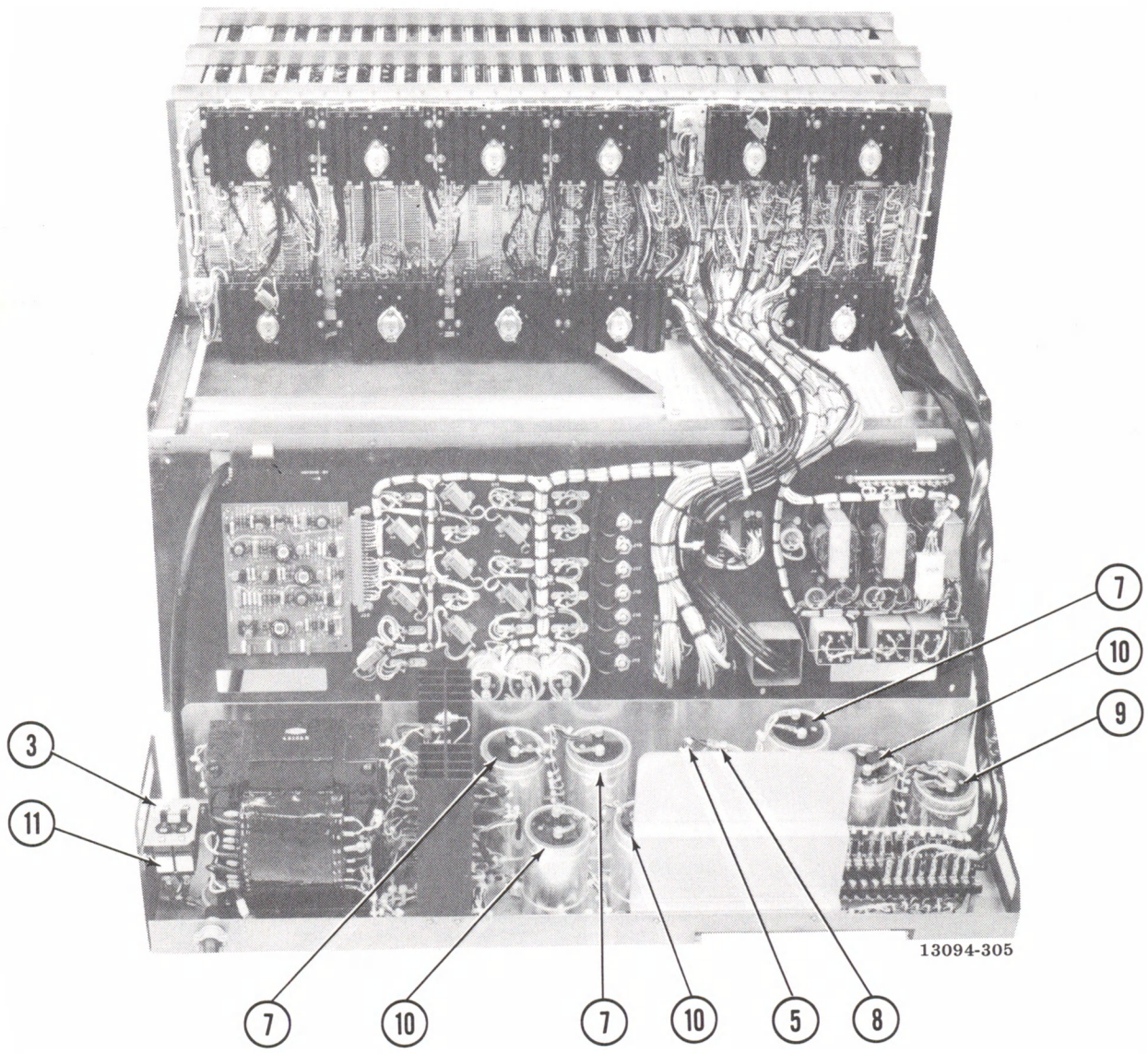

Assembly No. 1373140. Chassis Assembly

ITEM NO.	AMPEX PART NO.	REFERENCE NUMBER	DESCRIPTION	JEDEC NO. OR MFR. PART NO.
	1373124-01		SERVO AND RELAY POWER SUPPLY REGULATOR PWA (NHA 1373036)	
2	1373122		SCHEMATIC	
4	062-369	R7,9	RESISTOR, MF, 365 OHM, 1/4W, 1%	
5	013-257	VR2,5,9	DIODE, ZENER	1N753A
6	013-313	VR12	DIODE, ZENER	1N963B
7	013-354	VR1,7	DIODE, ZENER	1N965B
8	013-460	VR11	DIODE, ZENER	1N825A
9	013-663	VR4,8,10	DIODE, ZENER	1N967B
10	013-677	CR1,2,3	DIODE, SWITCHING	
11	013-690	VR3,6	DIODE, ZENER	1N962B
12	014-247	Q1,2,5,6	TRANSISTOR	2N2219
13	014-364	Q11,12	TRANSISTOR	2N2905A
14	014-755		HEATSINK, XSTR, REF: Q3,7,9	
15	280-998		PAD, MTG, XSTR, REF: Q1-12	
16	035-893	C1,2,3,6,8,9,11, 13,14	CAPACITOR, MYLAR, 0.1, 50V	
17	037-736	C5,10,15	CAPACITOR, TANT, 22 UF, 35V	
18	037-152	C4,7,12	CAPACITOR, TANT, 82 UF, 50V	
19	148-028	TP1-3	CONNECTOR, TIPJACK, WHT	
20	041-282	R4,10,11,20,23, 25,31,37,38	RESISTOR, FXD, 150 OHM, 1/2W, 5%	
21	041-433	R1,28,45	RESISTOR, FXD, 27 OHM, 1/2W, 5%	
22	041-008	R12,16,27,29,43	RESISTOR, FXD, 1.5K, 1/2W, 5%	
23	041-245	R15,36,48	RESISTOR, FXD, 1K, 1/2W, 5%	
25	048-257	R5,17,44	RESISTOR, MF, FXD, 3.01K, 1/4W, 1%	
26	048-259	R32	RESISTOR, MF, FXD, 1.0K, 1/4W, 1%	
27	048-615	R3,26	RESISTOR, MF, FXD, 1.21K, 1/4W, 1%	
28	048-618	R6,8,18,21,33, 40,42	RESISTOR, MF, FXD, 2.0K, 1/4W, 1%	
29	048-654	R46,47	RESISTOR, MF, FXD, 909 OHM, 1/4W, 1%	
30	048-709	R39,41	RESISTOR, MF, FXD, 51.1 OHM, 1/4W, 1%	
31	048-761	R13,35	RESISTOR, MF, FXD, 2.43K, 1/4W, 1%	
32	062-939	R14,34	RESISTOR, MF, FXD, 2.05K, 1/4W, 1%	
33	058-541	R49,50,51	RESISTOR, VAR, CER, 200 OHM, 1W, 5%	
34	062-494	R2,19,22,24,30	RESISTOR, FXD, 178 OHM, 1/4W, 1%	
35	580-166	Q4,8,9	TRANSISTOR	2N5322
36	580-167	Q3,7,10	TRANSISTOR	2N5320
37	586-269	A1,2,3	INTEGRATED CIRCUIT	741
				E

SHEET 1 OF 1

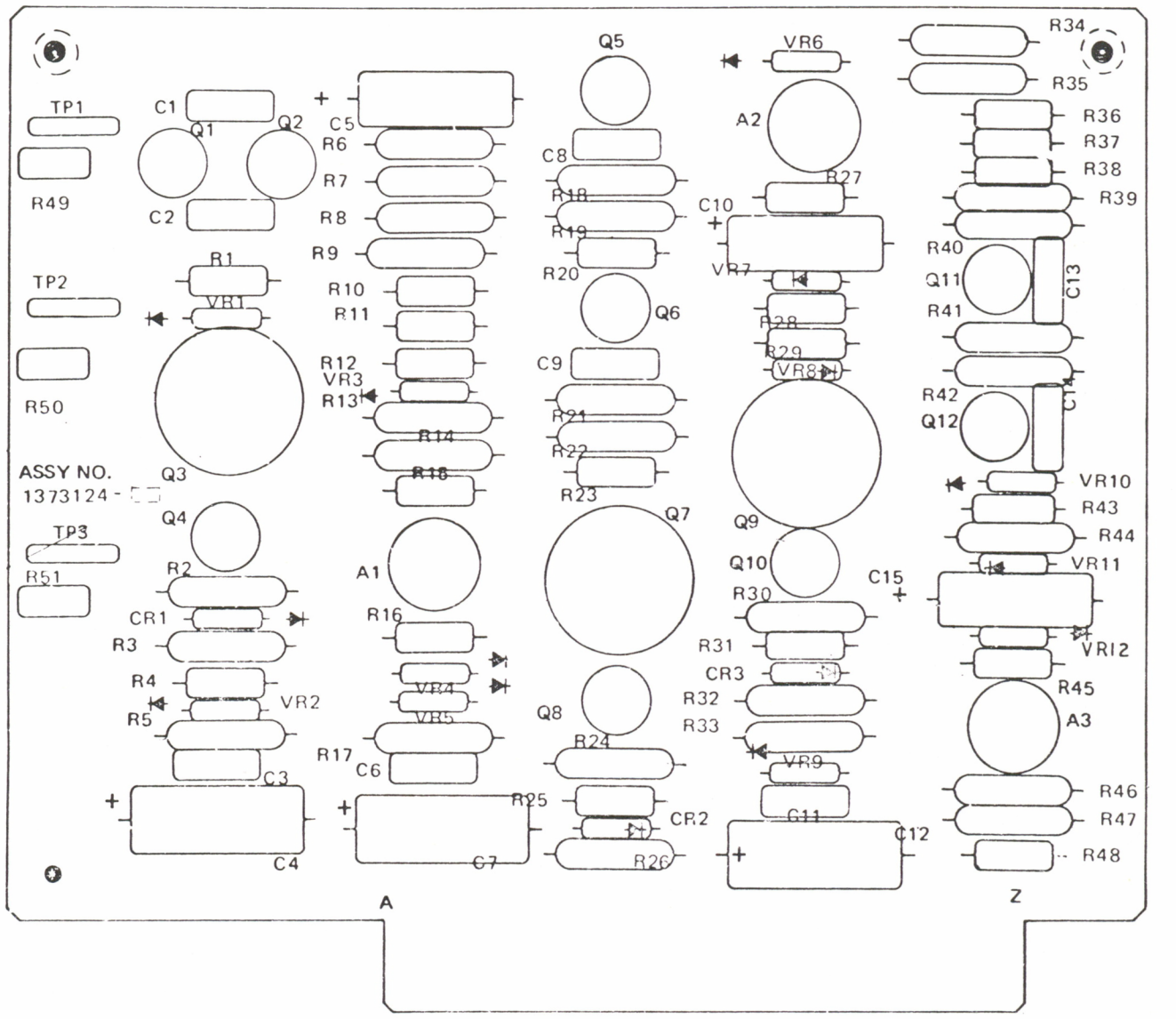

Assembly No. 1373124. Servo and Relay Power Supply Regulator PWA

ITEM NO.	AMPEX PART NO.	REFERENCE NUMBER	DESCRIPTION	JEDEC NO. OR MFR. PART NO.
	1373200-02		MISCELLANEOUS PARTS KIT (NHA 1373043)	
1	28050-04		REEL, EMPTY MAG TAPE 12-1/2 IN	
4	50074-01		SCREW, VIDEO HD MTG	
6	1373377-01		EXTENDER BOARD ASSY	
8	1373380-01		PULLER, PCB	
9	1374830-01		EXTENDER BOARD ASSY, AUDIO PREAMP	
12	166-902		CONNECTOR, 26 PIN	
13	166-226		CONTACT, PIN, NO. 24–26 AWG	
14	166-200		CONTACT, PIN, NO. 20–22 AWG	
				C

SHEET 1 OF 1

ITEM NO.	AMPEX PART NO.	REFERENCE NUMBER	DESCRIPTION	JEDEC NO. OR MFR. PART NO.
	1374830-01		EXTENDER BOARD ASSEMBLY, 10 PIN DUAL (NHA 1373200)	
1	1374831-01		GUIDE, CARD, 10 PIN	
2	139-170		CONNECTOR, PC RECP, 10 DUAL CONT	
3	471-065		SCREW, MACH, XREC, PAN HD, NO. 4-40 X 0.62 LG	
4	493-005		NUT, LOCKING, HEX, NO. 4-40	

SHEET 1 OF 1

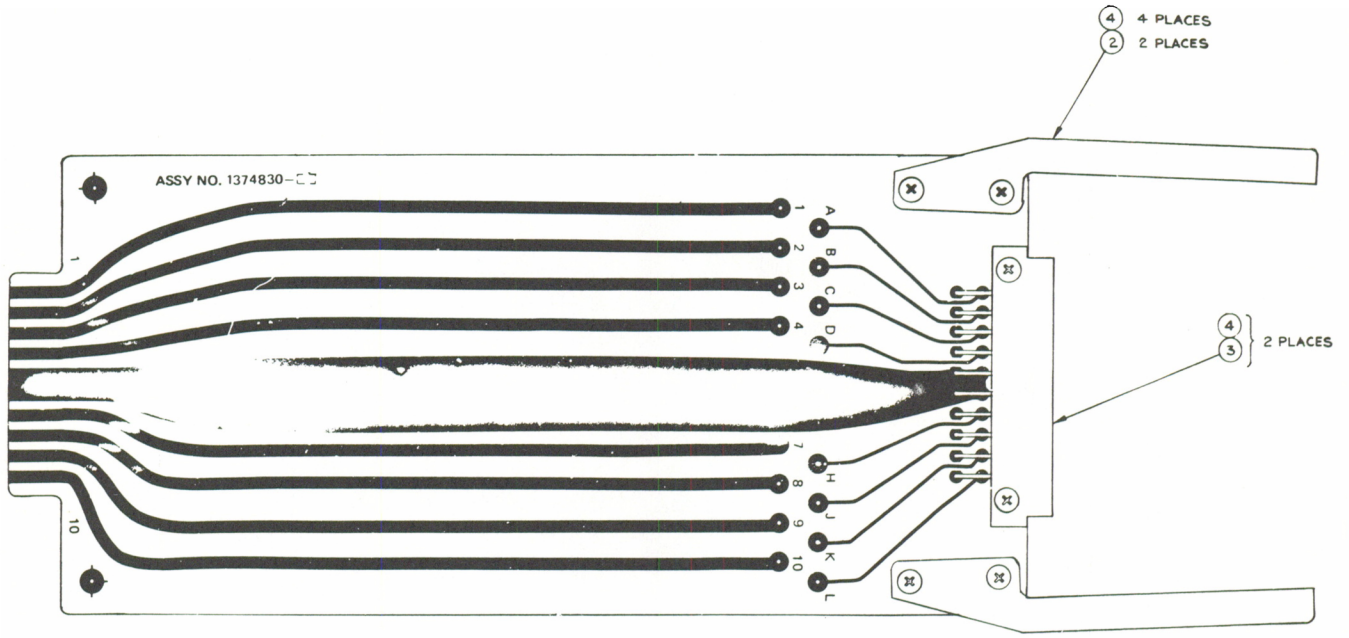

ITEM NO.	AMPEX PART NO.	REFERENCE NUMBER	DESCRIPTION	JEDEC NO. OR MFR. PART NO.
	1373377-01		EXTENDER CARD ASSEMBLY (NHA 1373200)	
2	1373371-02		GUIDE, CARD, EXTENDER BOARD	
3	1373372-01		SHIELD, EXTENDER BOARD	
4	1373372-02		SHIELD, EXTENDER BOARD	
6	1367615-01		BLOCK, CONN MTG	
10	139-412		CONNECTOR, REC PC, 100 PIN	
11	471-062		SCREW, MACH, XREC, PAN HD, NO. 4-40 X 0.375	
12	471-064		SCREW, MACH, XREC, PAN HD, NO. 4-40 X 0.50	
13	471-071		SCREW, MACH, XREC, PAN HD, NO. 6-32 X 0.50	
15	493-005		NUT, LOCKING, HEX, NO. 4-40	
16	501-008		WASHER, PLAIN, NO. 4	
18	502-002		WASHER, LOCK, HELICAL, SPR, NO. 4	
19	502-003		WASHER, LOCK, HELICAL, SPR, NO. 6	A

SHEET 1 OF 1

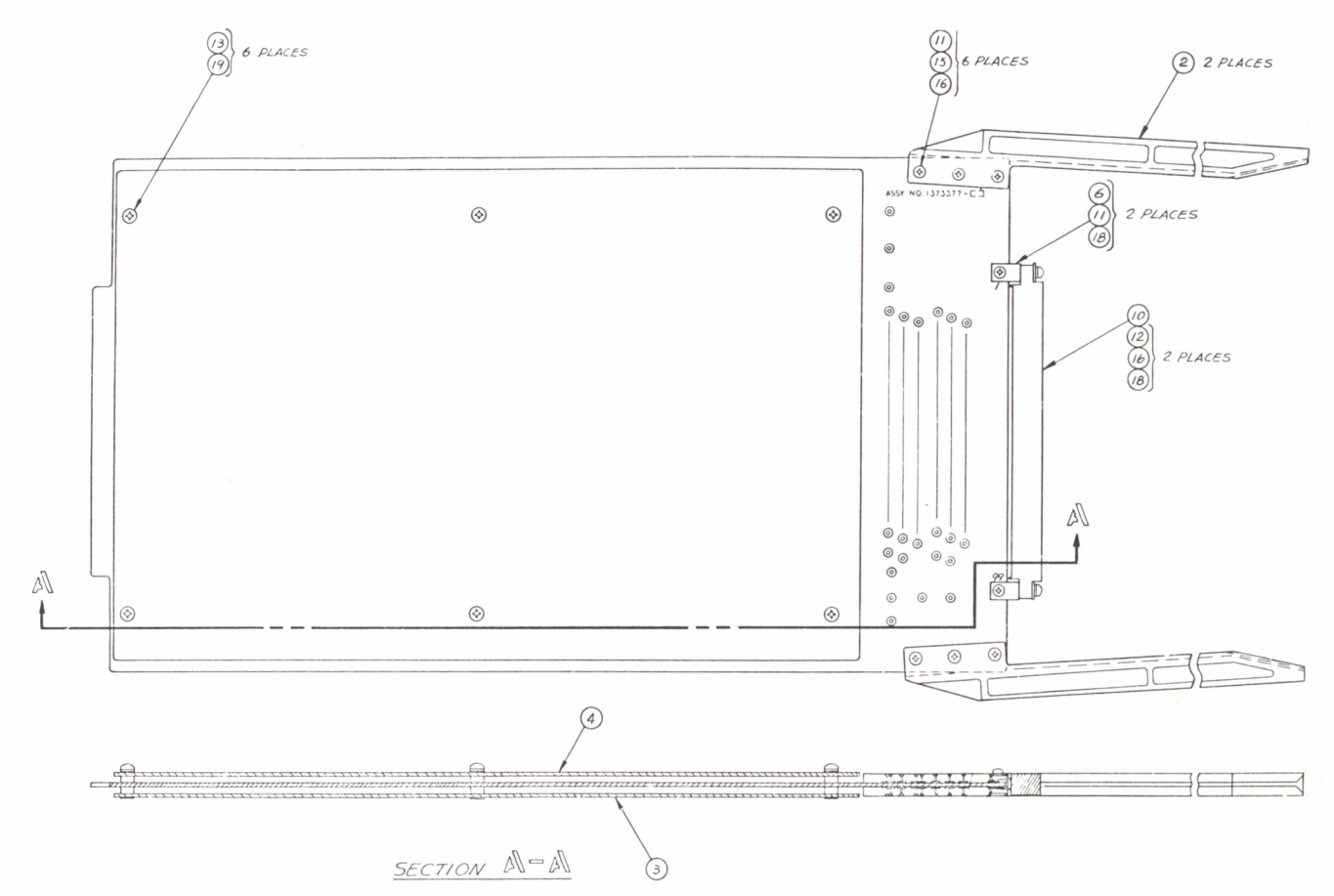

ITEM NO.	AMPEX PART NO.	REFERENCE NUMBER	DESCRIPTION	JEDEC NO. OR MFR. PART NO.
	1373388-01		AUDIO REAR FILLER ASSEMBLY (NHA 1373000)	
1	1373389-01		SUBPLATE, CONN MTG	
2	1373390-01		PANEL, FILLER	
4	166-200		CONTACT, PIN, 20–22 AWG	
5	167-025	J24	CONNECTOR, RECP, 12 POS	
10	471-069		SCREW, PAN HD, NO. 6–32 IN, 0.375 LG	
11	502-003		WASHER, SPR, LOCK, NO. 6	

SHEET 1 OF 1

ITEM NO.	AMPEX PART NO.	REFERENCE NUMBER	DESCRIPTION	JEDEC NO. OR MFR. PART NO.
	1373112-07		MANUAL TRACKING AND CAPSTAN DRIVE PWA	
4	1373272-01		SHIELD, PWB	
5	1373471		SCHEMATIC	
6	044-274	R13	RESISTOR, VAR, WW, 10K, 1W, 5%	
8	041-522	R3,4	RESISTOR, COMP, 910 OHM, 1/2W, 5%	
9	041-604	R9	RESISTOR, COMP, 11K, 1/2W, 5%	
10	041-303	R10	RESISTOR, COMP, 3.9K, 1/2W, 5%	
11	041-008	R12	RESISTOR, COMP, 1.5K, 1/2W, 5%	
12	041-014	R14,34,43	RESISTOR, COMP, 10K, 1/2W, 5%	
14	041-025	R20	RESISTOR, COMP, 150K, 1/2W, 5%	
16	041-334	R37,40,75	RESISTOR, COMP, 200 OHM, 1/2W, 5%	
17	041-498	R39,63,64	RESISTOR, COMP, 24K, 1/2W, 5%	
19	041-002	R46	RESISTOR, COMP, 10 OHM, 1/2W, 5%	
21	041-256	R58	RESISTOR, COMP, 560 OHM, 1/2W, 5%	
23	041-010	R61	RESISTOR, COMP, 2K, 1/2W, 5%	
25	041-330	R31	RESISTOR, COMP, 6.8K, 1/2W, 5%	
26	041-286	R79,100	RESISTOR, COMP, 1M, 1/2W, 5%	
27	041-013	R1,2,5-8,24,25, 54,135	RESISTOR, COMP, 4.7K, 1/2W, 5%	
29	041-331	R139	RESISTOR, COMP, 3.3K, 1/2W, 5%	
30	041-379	R137	RESISTOR, COMP, 430 OHM, 1/2W, 5%	
31	041-455	R11,33,96,102, 105-120,128-132, 140-142	RESISTOR, COMP, 6.2K, 1/2W, 5%	
34	041-023	R28	RESISTOR, COMP, 100K, 1/2W, 5%	
36	041-538	R144-147	RESISTOR, COMP, 6.2K, 1/4W, 5%	
39	041-004	R18,21,143	RESISTOR, COMP, 220 OHM, 1/2W, 5%	
41	057-879	R22	RESISTOR, MF, 31.6K, 1/4W, 1%	
47	066-760	R44	RESISTOR, MF, 392K, 1/4W, 1%	
48	066-048	R45	RESISTOR, MF, 51.1K, 1/4W, 1%	
52	041-476	R57	RESISTOR, MF, 2.21K, 1/4W, 1%	
54	057-386	R16,76,97	RESISTOR, MF, 30.1K, 1/4W, 1%	
59	042-483	R101	RESISTOR, MF, 15K, 1/4W, 1%	
60	042-475	R121	RESISTOR, MF, 12.1K, 1/4W, 1%	
61	048-656	R15	RESISTOR, MF, 18.2K, 1/4W, 1%	
62	057-911	R68	RESISTOR, MF, 1.5K, 1/4W, 1%	
64	062-651	R123	RESISTOR, MF, 24.3K, 1/4W, 1%	
65	043-556	R48	RESISTOR, WW, 1.0 OHM, 5W, 3%	
66	043-824	R50	RESISTOR, WW, 87 OHM, 5W, 1%	
				M

ASSEMBLY NO. 1373112 TITLE MANUAL TRACKING AND CAPSTAN DRIVE PWA, MODULE NO. 1

ITEM NO.	AMPEX PART NO.	REFERENCE NUMBER	DESCRIPTION	JEDEC NO. OR MFR. PART NO.
67	041-016	R23,53,73,134, 150	RESISTOR, COMP, 22K, 1/2W, 5%	
69	041-245	R26,30,47,49,51, 52,55,69,70,90, 94,95,104,122, 124,125,138, 148,149	RESISTOR, COMP, 1K, 1/2W, 5%	
72	035-893	C19	CAPACITOR, MYLAR, 0.1 UF, 50V, 5%	
74	055-133	C42,49,52,54-56	CAPACITOR, MYLAR, 0.0022 UF, 50V, 5%	
75	055-166	C43,58,70	CAPACITOR, MYLAR, 0.001 UF, 50V, 5%	
76	035-734	C1,2,26,27,30, 65,71	CAPACITOR, MYLAR, 0.01 UF, 50V, 5%	
77	035-730	C10,14,50,51,53, 57,59,63,64	CAPACITOR, MYLAR, 0.0047, 50V, 5%	
79	030-057	C11-13,15,29, 31-33,44-46,73	CAPACITOR, CER, 0.01 UF, 100V, 10%	
80	055-588	C16,18	CAPACITOR, MYLAR, 0.56 UF, 50V, 5%	
90	055-810	C3,8,9	CAPACITOR, POLYCARB, 0.1 UF, 100V, 1%	
92	037-186	C6,47,48,60, 61,68	CAPACITOR, TANT, 120 UF, 10V, 10%	
94	037-620	C4,66	CAPACITOR, TANT, 100 UF, 20V, 10%	
97	037-985	C62,72	CAPACITOR, TANT, 15 UF, 20V, 10%	
99	037-367	C34,35	CAPACITOR, TANT, 2.2 UF, 20V, 10%	
100	030-094	C5,7,67,69	CAPACITOR, MONO, 1 UF, 25V, 20%	
106	586-121	A15	INTEGRATED CIRCUIT	F711C
108	586-325	A3,24,30,34,35, 38,45	INTEGRATED CIRCUIT	SN7405N
109	586-124	A5,11,22,47	INTEGRATED CIRCUIT	UA710C
114	586-533	A29,40,41	INTEGRATED CIRCUIT	SN74121N
115	586-492	A31	INTEGRATED CIRCUIT	SN7496N
116	586-423	A32	INTEGRATED CIRCUIT	SN7442N
117	586-077	A33	INTEGRATED CIRCUIT	SN7420N
118	587-051	A42	INTEGRATED CIRCUIT	SN7425N
119	586-109	A43	INTEGRATED CIRCUIT	SN7402N
120	586-785	A16	INTEGRATED CIRCUIT	SN7495N
121	586-075	A20,26,36,37,39	INTEGRATED CIRCUIT	SN7400N
122	586-261	A8,17,27	INTEGRATED CIRCUIT	LM302H
123	586-269	A1,2,4,7,9,10, 12,18,19,23	INTEGRATED CIRCUIT	UA741C
124	586-326	A6,14,46,48	INTEGRATED CIRCUIT	SN7404N
125	586-581	A13	INTEGRATED CIRCUIT	SN7403
126	586-309	A28,44,49	INTEGRATED CIRCUIT	F9601
128	014-247	Q1,4,12	TRANSISTOR	2N2219
129	014-364	Q2,3	TRANSISTOR	2N2905A
130	014-631	Q5	TRANSISTOR	2N3536
131	014-506	Q6,10	TRANSISTOR	2N2501

M

SHEET 2 OF 3

ASSEMBLY NO. 1373112 TITLE MANUAL TRACKING AND CAPSTAN DRIVE PWA, MODULE NO. 1

ITEM NO.	AMPEX PART NO.	REFERENCE NUMBER	DESCRIPTION	JEDEC NO. OR MFR. PART NO.
132	580-166	Q8	TRANSISTOR	2N5322
133	580-167	Q7	TRANSISTOR	2N5320
136	014-505	Q11,13,14	TRANSISTOR	2N3251
137	014-248	Q15,16,18	TRANSISTOR	2N2222
138	013-689	CR1-4	DIODE	FD600
139	014-597	Q9	TRANSISTOR	
140	143-981	J1-2,A,B,C, J3-A,B,C,D,E, J4-A,B,J5-A,B		
141	602-012	J1-5	PLUG, SHORTING	
142	580-133	Q17,19	TRANSISTOR	2N4093
145	250-188		BUMPER, PAD, BLK RBR, ADHESIVE BACK	
146	280-130		PAD, XSTR, MTG, T0-18, REF: Q6,10,11,13-19	
147	280-998		PAD, XSTR, MTG, T0-5, REF: Q1-4,7,8,12	
149	014-070		HEATSINK, XSTR, REF: Q7,8	
151	1373285-01		OVERLAY	
152	1373273-01		HANDLE, MODULE	
153	471-325		SCREW, FLAT HD, NO. 4-40 X 3/16 LG	
154	473-325		SCREW, MACH, ASSY, NO. 4 X 0.312 LG	
155	496-004		NUT, ASSEM, NO. 4	
156	501-169		WASHER, PLAIN, NO. 4	
157	1373227-01		CONTACT, GND	
159	103307-01		STANDOFF, 0.250 LG, REF: R48,50	
161	041-017	R78,99	RESISTOR, COMP, 33K, 1/2W, 5%	
162	041-239	R19,27,60,65,74, 91-93,126,133,136	RESISTOR, COMP, 2.2K, 1/2W, 5%	
163	041-344	R59,62,67	RESISTOR, COMP, 390 OHM, 1/2W, 5%	
164	057-042	R17,35,36,42,66, 77,83,89,98,127	RESISTOR, MF, 10K, 1/4W, 1%	
165	062-260	R56,86,88	RESISTOR, MF, 5.11K, 1/4W, 1%	
167	048-751	R32,103	RESISTOR, MF, 6.04K, 1/4W, 1%	
168	062-913	R82	RESISTOR, MF, 6.81K, 1/4W, 1%	
170	041-278	R29,41,72,80,84	RESISTOR, COMP, 2.7K, 1/2W, 5%	
171	057-911	R71	RESISTOR, MF, 1.5K, 1/4W, 1%	
175	064-133	C17	CAPACITOR, CER, 0.033 UF, 100V, 20%	
176	058-651	R151	RESISTOR, VAR, 2K, 1/2W, 10%	
177	057-517	R38,81	RESISTOR, MF, 2.26K, 1/4W, 1%	
178	062-540	R87	RESISTOR, MF, 5.49K, 1/4W, 1%	
179	048-619	R85	RESISTOR, MF, 2.49K, 1/4W, 1%	

M

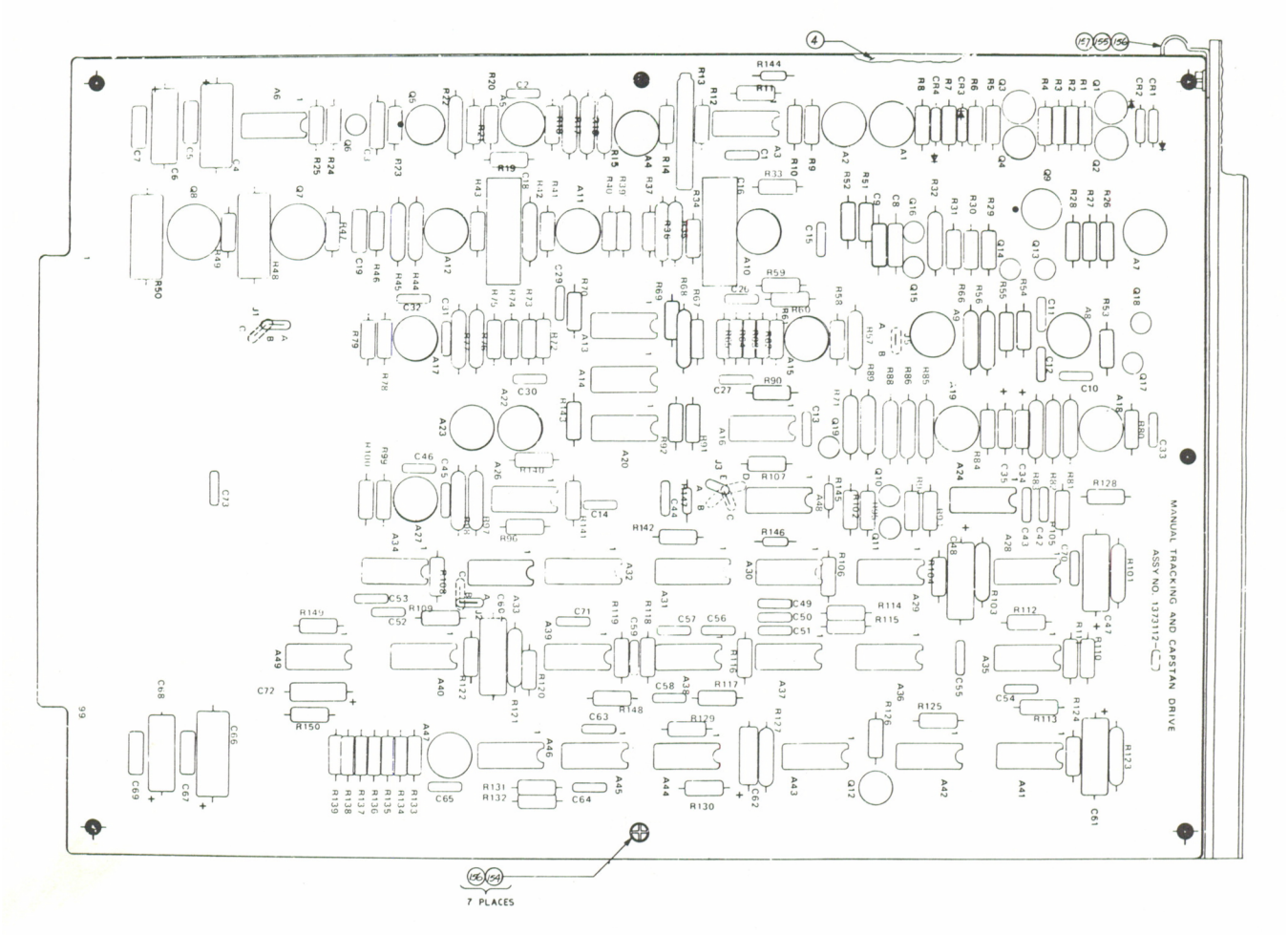

Assembly No. 1373112. Manual Tracking and Capstan Drive PWA, Module No. 1

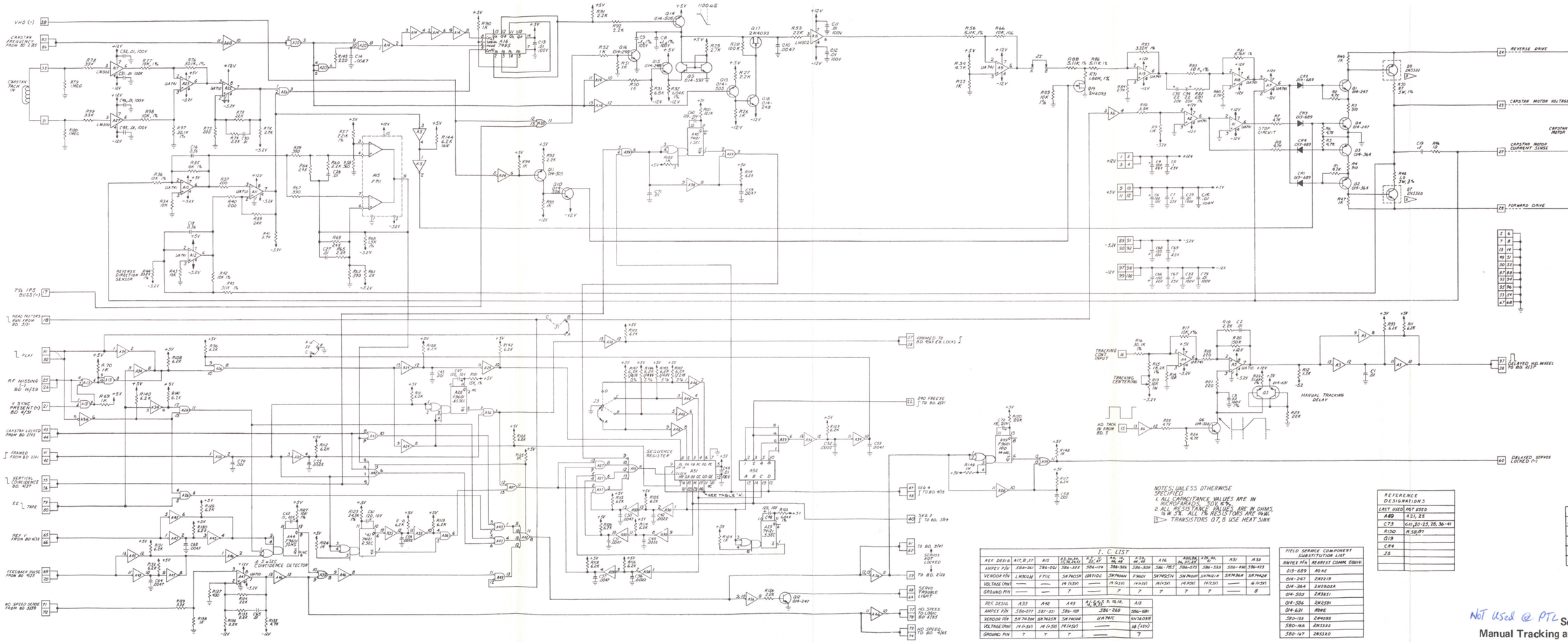

NOTES: UNLESS OTHERWISE SPECIFIED
1. ALL CAPACITANCE VALUES ARE IN MICROFARADS, 50V, 5%.
2. ALL RESISTANCE VALUES ARE IN OHMS, ½ W, 2%. ALL 1% RESISTORS ARE 99¢.
3. TRANSISTORS Q7, 8 USE HEAT SINK

I. C. LIST

REF. DESIG	A11, B, 27	A15	A16	A31	A32
AMPEX P/N	586-067	586-052	586-075	586-133	586-423
VENDOR P/N	LM301H	F710C	SN74S05N	SN74S04N	SN74S40
VOLTAGE (PIN)	—	—	14 (5.5V)	14 (5.5V)	14 (5.5V)
GROUND PIN	—	—	7	7	8

REF. DESIG	A33	A42	A43	A18
AMPEX P/N	586-077	587-151	586-109	586-069
VENDOR P/N	SN74S38N	SN74S02N	SN74S00N	SN74S03N
VOLTAGE (PIN)	14 (5.5V)	14 (5.5V)	14 (5.5V)	14 (5.5V)
GROUND PIN	7	7	7	7

REFERENCE DESIGNATIONS	
LAST USED	NEXT USED
A40	A31, 33
C73	C31, 32-25, 28, 36-41
R150	R138, 97
Q19	
C44	
35	

TABLE A
SEQUENCE REGISTER

SEQUENCE	CAPSTAN FUNCTION	HEAD WHEEL FUNCTION
1	INITIAL FRAMING	TACH LOCK
2	FROZEN ON 240 C.T.	SELECT MANUAL TACH
3	COMPLETE FRAMING	TACH LOCK TO SELECTED TACH
4	NORMAL OPER ON 240 C.T.	TACH LOCK OR NOT LOCK ON HI SPD

FIELD SERVICE COMPONENT SUBSTITUTION LIST	
AMPEX P/N	NEAREST COMM. EQUIV.
013-6089	NONE
014-1247	2N2219
014-1364	2N2905A
014-5053	2N3251
014-5056	2N2501
014-6311	NONE
580-1133	2N4093
580-1166	2N3332
580-1167	2N3330

Not Used @ PTL Schematic No. 1373471.
Manual Tracking and Capstan Drive PWA, Module No. 1

ITEM NO.	AMPEX PART NO.	REFERENCE NUMBER	DESCRIPTION	JEDEC NO. OR MFR. PART NO.
	1373298-03		AUTO TRACKING AND CAPSTAN DRIVE PWA	
2	1373299		SCHEMATIC	
4	1373227-01		CONTACT, GND	
5	1373272-01		SHIELD, PWB	
6	1373273-01		HANDLE, MODULE	
7	1373285-01		OVERLAY	
8	250-188		BUMPER, PAD, BLK RBR, ADHESIVE BACK	
9	471-325		SCREW, FLAT HD, NO. 4-40 X 0.187 LG	
10	473-325		SCREW, ASSEM WASH, NO. 4-40 X 0.312 LG	
11	496-004		NUT, ASSEM WASH, NO. 4	
12	501-169		WASHER, PLAIN	
15	013-689	CR1-6	DIODE	FD600
16	014-597	Q28	TRANSISTOR, DUAL	
17	014-247	Q3,5,10	TRANSISTOR	2N2219
18	014-248	Q12,23,26,29,30	TRANSISTOR	2N2222
19	014-364	Q1,2	TRANSISTOR	2N2905A
20	014-505	Q9,13,22,24,27,31	TRANSISTOR	2N3251
21	014-506	Q8,20	TRANSISTOR	2N2501
22	014-631	Q21	TRANSISTOR, DUAL	2N3536
23	580-133	Q7,11,14-19,25	TRANSISTOR	2N4093
24	580-166	Q6	TRANSISTOR	2N5322
25	580-167	Q4	TRANSISTOR	2N5320
28	030-057	C1-3,10,11,16,17, 20,33,35,36,41, 43-48,50-52,57,58, 66,69,70,78,81,82, 84,85,88,95,101, 106,111-113,116, 124	CAPACITOR, CER, 0.01, 100V, 20%	
32	030-094	C49,108,120	CAPACITOR, MONO, 1 UF, 25V, 20%	
36	035-730	C4,37,56,64,74, 75,77,79.97,115	CAPACITOR, MYLAR, 0.0047 UF, 50V, 5%	
37	035-734	C12,38,39,67,80, 83,102,114,123	CAPACITOR, MYLAR, 0.01 UF, 50V, 5%	
38	035-883	C94	CAPACITOR, MYLAR, 0.068 UF, 50V, 5%	
39	035-893	C13,72,96,104, 105	CAPACITOR, MYLAR, 0.1 UF, 50V, 5%	
40	055-133	C54,60,62,68, 73,76	CAPACITOR, MYLAR, 0.0022 UF, 50V, 5%	
41	055-166	C34,53,61	CAPACITOR, MYLAR, 0.001 UF, 50V, 5%	
42	055-156	C117	CAPACITOR, MYLAR, 0.22 UF, 50V, 5%	
45	037-186	C5,14,55,59,71, 86,87,119	CAPACITOR, TANT, 120 UF, 10V, 10%	
46	037-367	C8,9,103	CAPACITOR, TANT, 2.2 UF, 20V, 10%	
47	037-620	C15,122	CAPACITOR, TANT, 100 UF, 20V, 10%	
48	037-746	C99,100	CAPACITOR, TANT, 47 UF, 20V, 10%	
49	037-751	C121	CAPACITOR, TANT, 100 UF, 10V, 10%	
				E

ASSEMBLY NO. 1373298 TITLE AUTO TRACKING AND CAPSTAN DRIVE PWA, MODULE NO. 1

ITEM NO.	AMPEX PART NO.	REFERENCE NUMBER	DESCRIPTION	JEDEC NO. OR MFR. PART NO.
50	037-985	C63,65	CAPACITOR, TANT, 15 UF, 20V, 10%	
51	037-991	C109	CAPACITOR, TANT, 22 UF, 15V, 10%	
54	055-807	C89,90,92,93, 107,118	CAPACITOR, POLYCARB, 1 UF, 100V, 1%	
57	055-810	C6,7,98	CAPACITOR, POLYCARB, 0.1 UF, 100V, 1%	
59	069-042	C40,42	CAPACITOR, POLYCARB, 0.56 UF, 100V, 1%	
60	069-018	C91,110	CAPACITOR, POLYCARB, 0.39 UF, 100V, 1%	
62	041-413	R45	RESISTOR, COMP, 6.8K, 1/4W, 5%	
63	041-751	R202	RESISTOR, COMP, 36K, 1/4W, 5%	
64	041-393	R93,94	RESISTOR, COMP, 1M, 1/4W, 5%	
65	041-394	R142,145	RESISTOR, COMP, 100K, 1/4W, 5%	
66	041-396	R40,138,189	RESISTOR, COMP, 220 OHM, 1/4W, 5%	
67	041-406	R34,56,112,133, 151,182,200, 201,215	RESISTOR, COMP, 22K, 1/4W, 5%	
68	041-407	R115	RESISTOR, COMP, 3.3K, 1/4W, 5%	
69	041-408	R1,88,91,118, 148,152,157,161, 162,206	RESISTOR, COMP, 10K, 1/4W, 5%	
70	041-409	R156	RESISTOR, COMP, 15K, 1/4W, 5%	
71	041-410	R21,25,29,33, 36,38,44,49,50, 51,64,67,69,104, 114,122,132,143, 146,184,194,195, 196,207	RESISTOR, COMP, 1K, 1/4, 5%	
72	041-411	R198,203	RESISTOR, COMP, 47K, 1/4W, 5%	
73	041-412	R11,13,14,17,20, 23,32,109,174, 180,181,185,187,	RESISTOR, COMP, 4.7K, 1/4W, 5%	
74	041-414	R39,47,48,55,68, 74,79,110,111, 134,140,144,197	RESISTOR, COMP, 2.2K, 1/4W, 5%	
75	041-417	R73,81,82	RESISTOR, COMP, 390 OHM, 1/4W, 5%	
76	041-429	R153,220	RESISTOR, COMP, 680 OHM, 1/4W, 5%	
77	041-430	R2,141,177,219	RESISTOR, COMP, 1.5K, 1/4W, 5%	
78	041-431	R139	RESISTOR, COMP, 150K, 1/4W, 5%	
80	041-482	R205	RESISTOR, COMP, 12K, 1/4W, 5%	
81	041-518	R92,95,178,191	RESISTOR, COMP, 33K, 1/4W, 5%	
82	041-442	R7,18,41,54,83	RESISTOR, COMP, 2.7K, 1/4W, 5%	
85	041-496	R26	RESISTOR, COMP, 10 OHM, 1/4W, 5%	
86	041-497	R77,176,188	RESISTOR, COMP, 560 OHM, 1/4W, 5%	
87	041-511	R15	RESISTOR, COMP, 3.9K, 1/4W, 5%	
88	041-532	R12,24	RESISTOR, COMP, 910 OHM, 1/4W, 5%	
				E

ASSEMBLY NO. 1373298 TITLE AUTO TRACKING AND CAPSTAN DRIVE PWA, MODULE NO. 1

ITEM NO.	AMPEX PART NO.	REFERENCE NUMBER	DESCRIPTION	JEDEC NO. OR MFR. PART NO.
89	041-538	R28,31,35,52, 62,63,65,66,70, 71,96-98,100-102, 105-107,116, 117,119,120, 123-131,135-137, 179,199,208-213,216,221	RESISTOR, COMP, 6.2K, 1/4W, 5%	
91	041-560	R72	RESISTOR, COMP, 2K, 1/4W, 5%	
93	041-740	R57,85,86	RESISTOR, COMP, 200 OHM, 1/4W, 5%	
94	041-743	R113	RESISTOR, COMP, 430 OHM, 1/4W, 5%	
95	041-748	R16	RESISTOR, COMP, 11K, 1/4W, 5%	
96	041-750	R75,80,84	RESISTOR, COMP, 24K, 1/4W, 5%	
98	058-540	R147	RESISTOR, VAR, 5K, 1W, 10%	
99	058-565	R204	RESISTOR, VAR, 10K, 1/2W, 10%	
101	043-556	R22	RESISTOR, WW, 1.0 OHM, 5W, 3%	
102	043-824	R27	RESISTOR, WW, 87 OHM, 5W, 1%	
104	062-969	R3-5	RESISTOR, MF, 5.11K, 1/8W, 1%	
105	042-331	R149	RESISTOR, MF, 16.9K, 1/8W, 1%	
106	062-601	R37,186	RESISTOR, MF, 100K, 1/8W, 1%	
107	062-694	R99,154	RESISTOR, MF, 15.0K, 1/8W, 1%	
108	062-797	R183	RESISTOR, MF, 31.6K, 1/8W, 1%	
109	062-913	R9	RESISTOR, MF, 681 OHM, 1/8W, 1%	
110	062-932	R78,163,169	RESISTOR, MF, 475K, 1/8W, 1%	
111	066-034	R155	RESISTOR, MF, 475K, 1/8W, 1%	
112	062-941	R76	RESISTOR, MF, 2.21K, 1/8W, 1%	
116	062-961	R164,168	RESISTOR, MF, 3.92K, 1/8W, 1%	
117	062-966	R175	RESISTOR, MF, 4.75K, 1/8W, 1%	
122	062-983	R6,10,58,61,87, 89,150,158-160, 190,222	RESISTOR, MF, 10.0K, 1/8W, 1%	
123	062-986	R121	RESISTOR, MF, 12.1K, 1/8W, 1%	
124	062-997	R165-167,170, 172,173	RESISTOR, MF, 18.2K, 1/8W, 1%	
125	066-004	R103	RESISTOR, MF, 24.3K, 1/8W, 1%	
127	066-015	R53	RESISTOR, MF, 51.1K, 1/8W, 1%	
128	066-160	R30,46	RESISTOR, MF, 6.04K, 1/8W, 1%	
129	066-310	R192,193	RESISTOR, MF, 49.9K, 1/8W, 1%	
130	066-519	R90	RESISTOR, MF, 392K, 1/8W, 1%	
131	066-599	R217,218	RESISTOR, MF, 12.7K, 1/8W, 1%	
132	066-656	R59,60	RESISTOR, MF, 30,1K, 1/8W, 1%	
135	066-802	R108	RESISTOR, MF, 9.76K, 1/8W, 1%	
137	066-925	R171	RESISTOR, MF, 22.1K, 1/8W, 1%	
				E

ASSEMBLY NO. 1373298 TITLE AUTO TRACKING AND CAPSTAN DRIVE PWA, MODULE NO. 1

ITEM NO.	AMPEX PART NO.	REFERENCE NUMBER	DESCRIPTION	JEDEC NO. OR MFR. PART NO.
140	586-581	A63	INTEGRATED CIRCUIT	SN7403N
141	586-048	A15	INTEGRATED CIRCUIT	F711C
142	586-075	A5,14,22,26,28, 49,57,60	INTEGRATED CIRCUIT	SN7400N
143	586-077	A24	INTEGRATED CIRCUIT	SN7420N
144	586-109	A31	INTEGRATED CIRCUIT	SN7402N
145	586-124	A9,16,33,41	INTEGRATED CIRCUIT	F710C
146	586-261	A7,19,20	INTEGRATED CIRCUIT	LM302
147	586-269	A6,10,43,44	INTEGRATED CIRCUIT	F741C
148	586-325	A13,25,30,34, 36,38,40,59	INTEGRATED CIRCUIT	SN7405N
149	586-326	A8,11,37,53,58	INTEGRATED CIRCUIT	SN7404N
150	586-327	A52	INTEGRATED CIRCUIT	SN74H11N
151	586-423	A23	INTEGRATED CIRCUIT	SN7442N
152	586-440	A1-3,18,42,45, 48,62	INTEGRATED CIRCUIT	F747
153	586-492	A12	INTEGRATED CIRCUIT	SN7496N
154	586-533	A4,29,35	INTEGRATED CIRCUIT	SN74121N
155	586-309	A27,32,39,50	INTEGRATED CIRCUIT	9601
156	586-647	A55,56	INTEGRATED CIRCUIT	SN74107N
157	586-785	A17	INTEGRATED CIRCUIT	7495
158	586-797	A46,51,61	INTEGRATED CIRCUIT	SN74123N
159	586-932	A47	INTEGRATED CIRCUIT	D125BK
160	587-051	A21	INTEGRATED CIRCUIT	SN7425N
161	587-291	A54	INTEGRATED CIRCUIT	NE555V
164	014-070		HEATSINK, XSTR, REF: Q4,6	
166	143-981	J1,6(A,B) J4-7(A,B,C) J3(A,B,C,D,E)	JACK, PC, CLOSED ENTRY	
167	280-130		PAD, XSTR, MTG, T0-18, REF: 7-9,11-20,22,23	
168	280-998		PAD, XSTR, MTG, T0-5, REF: Q1-6,10	
169	602-012	J1,3-7	PLUG, SHORTING	
170	103307-01		SPACER, RESISTOR, REF: R22,27	
171	064-133	C18	CAPACITOR, CER, 0.033 UF, 100V, 20%	
172	058-651	R223	RESISTOR, VAR, 2K, 10%, 1/2W	
173	062-942	R19,224	RESISTOR, MF, 2.26K, 1/8W, 1%	
174	062-971	R225	RESISTOR, MF, 5.49K, 1/8W, 1%	
175	062-947	R8	RESISTOR, MF, 2.49K, 1/8W, 1%	

E

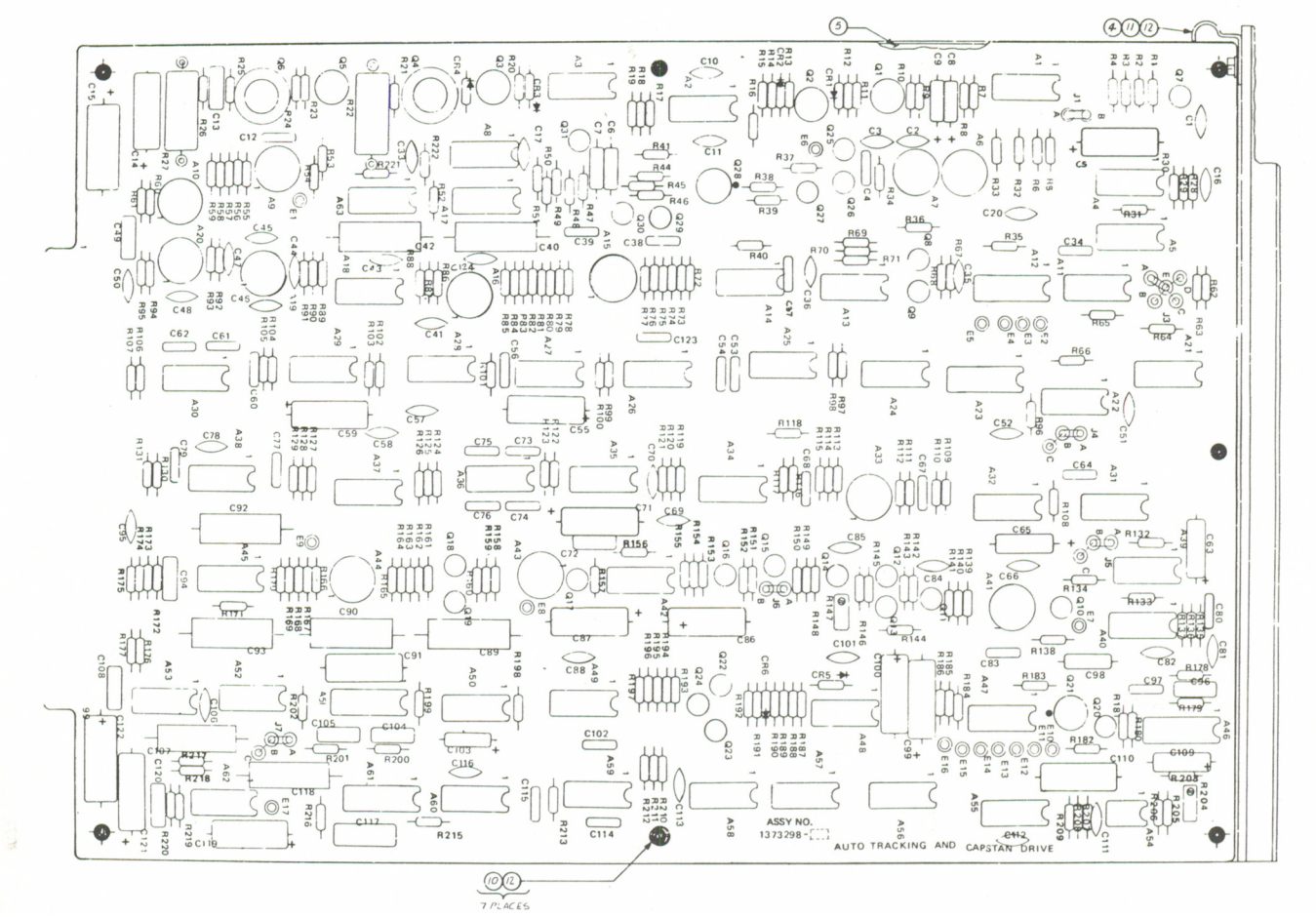

Assembly No. 1373298. Auto Tracking and Capstan Drive PWA, Module No. 1

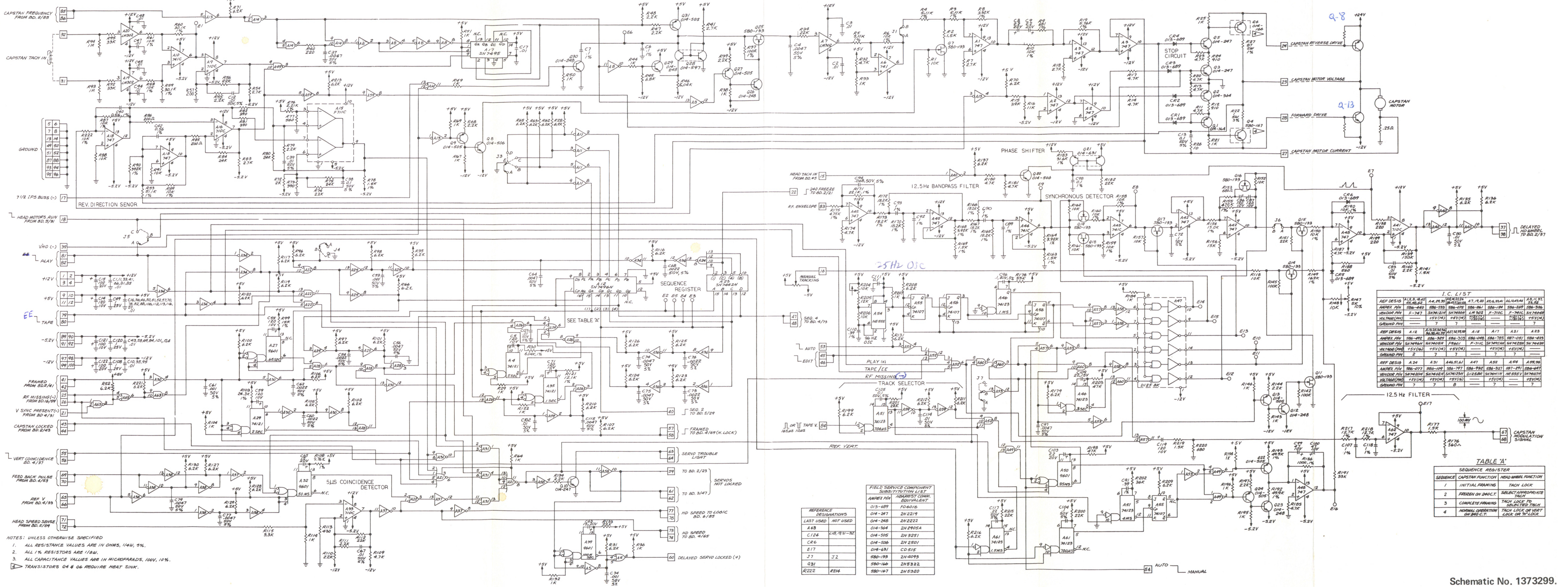

NOTES: UNLESS OTHERWISE SPECIFIED

1. ALL RESISTANCE VALUES ARE IN OHMS, 1/4W, 5%.
2. ALL 1% RESISTORS ARE 1/8W.
3. ALL CAPACITANCE VALUES ARE IN MICROFARADS, 100V, 10%.
4. TRANSISTORS Q4 & Q6 REQUIRE HEAT SINK.

REFERENCE DESIGNATIONS	
LAST USED	NOT USED
A63	
C124	C18, 19, 21–32.
CR6	
E17	
J7	J2
Q31	
R222	R214

FIELD SERVICE COMPONENT SUBSITITUTION LIST	
AMPEX P/N	NEAREST COMM. EQUIVALENT
013-689	FD6016
014-247	2N2219
014-248	2N2222
014-364	2N2905A
014-505	2N3251
014-506	2N2501
014-631	CD515
580-133	2N4093
580-166	2N5322
580-167	2N5320

I.C. LIST

REF DESIG	A1,2,3,18,42 45,46,62	A4,29,35	A5,14,22,26 28,49,57,60,63	A7,19,20	A9,16,33,41	A6,10,43,44	A8,11,37, 53,58
AMPEX P/N	586-440	586-533	586-075	586-261	586-184	586-269	586-326
VENDOR P/N	F-747	SN74121N	SN7400N	LM302	F-710C	F-741C	SN7404N
VOLTAGE (PIN)	—	+5V(14)	+5V(14)	+12V(7) -12V(4)	—	+12V(7) -12V(4)	+5V(14)
GROUND PIN	—	7	7	—	—	—	7

REF DESIG	A12	A13,25,30,34, 36,38,40,59	A27,32,39,50	A15	A17	A21	A23
AMPEX P/N	586-492	586-325	586-309	586-048	586-785	587-051	586-423
VENDOR P/N	SN7496N	SN7405N	F9601	F-711C	SN7495AN	SN7425N	SN7442N
VOLTAGE (PIN)	+5V(16)	+5V(14)	+5V(14)	—	+5V(14)	+5V(14)	—
GROUND PIN	2	7	7	—	7	7	—

REF DESIG	A24	A31	A46,51,61	A47	A52	A54	A55,56
AMPEX P/N	586-077	586-109	586-797	586-932	586-327	587-291	586-647
VENDOR P/N	SN7420N	SN7402N	SN74123N	D125BK	SN74H11N	NE555V	SN74107N
VOLTAGE (PIN)	+5V(14)	+5V(14)	+5V(16)	—	+5V(14)	—	+5V(14)
GROUND PIN	7	7	8	—	7	—	7

TABLE "A"

SEQUENCE REGISTER		
SEQUENCE	CAPSTAN FUNCTION	HEAD WHEEL FUNCTION
1	INITIAL FRAMING	TACH LOCK
2	FROZEN ON 240 C.T.	SELECT APPROPRIATE TACH
3	COMPLETE FRAMING	TACH LOCK TO SELECTED TACH
4	NORMAL OPERATION ON 240 C.T.	TACH LOCK OR VERT LOCK OR "H" LOCK

D

Schematic No. 1373299.
Auto Tracking and Capstan Drive PWA,
Module No. 1

ITEM NO.	AMPEX PART NO.	REFERENCE NUMBER	DESCRIPTION	JEDEC NO. OR MFR. PART NO.
	1373150-03		CAPSTAN SERVO PWA, NTSC	
	1373150-04		CAPSTAN SERVO PWA, PAL-M	
2	1373152		SCHEMATIC	
3	6000001-20		KNOB, POINTER, REF: R118	
4	1373272-01		SHIELD, PWB	
5	1373273-13		HANDLE, MODULE	
6	1373285-02		OVERLAY	
7	013-689	CR6,7,8	DIODE	FD600
8	581-074	CR1-5	DIODE	MV10B
9	058-474	R118	POTENTIOMETER, 500 OHM	
10	1373227-01		CONTACT, GND	
11	014-383	Q1	TRANSISTOR	2N2484
12	014-505	Q4,7,10,13,16	TRANSISTOR	2N3251
13	014-506	Q2,5,8,11,14, 17,20,21	TRANSISTOR	2N2501
14	014-631	Q3,19,22	TRANSISTOR, DUAL	2N3536
15	580-133	Q6,9,12,15,18	TRANSISTOR	2N4093
16	473-325		SCREW, SEM, PAN HD, NO. 4, 0.312 LG, NO. 4	
17	501-169		WASHER, SM PATT, NO. 4	
18	030-057	C5,7,9,10,12,13,15-17,20,22,24-26,28, 30-33,40,41,44-47, 51-53,56-59,61,62	CAPACITOR, CER, DISC, 0.01 UF	
21	030-094	C1,19,49,64	CAPACITOR, MONO, 1 UF, 25V	
23	034-153	C29	CAPACITOR, MICA, 1000 PF, 500V	
24	034-935	C27	CAPACITOR, MICA, 240 PF, 500V	
26	035-734	C54,55,60	CAPACITOR, MYLAR, 0.01 UF, 50V, 5%	
27	035-893	C48,50	CAPACITOR, MYLAR, 0.1 UF, 50V, 5%	
28	055-166	C4,23	CAPACITOR, MYLAR, 0.001 UF, 50V, 5%	
29	471-325		SCREW, MACH, FLAT HD, NO. 4-40 X 3/16 LG	
30	496-004		NUT, ASSEM WASH, NO. 4	
31	037-186	C18,35	CAPACITOR, TANT, 120 UF, 10V, 10%	
33	037-620	C2,63	CAPACITOR, TANT, 100 UF, 20V, 10%	
35	037-996	C3	CAPACITOR, TANT, 10 UF, 35V, 20%	
36	037-749	C38,39	CAPACITOR, TANT, 68 UF, 15V, 10%	
37	037-991	C8	CAPACITOR, TANT, 22 UF, 15V, 10%	
39	069-028	C14	CAPACITOR, POLY, 2 UF, 1%, 100V	
40	055-808	C6	CAPACITOR, POLY, 0.22 UF, 1%, 100V	
41	055-810	C21	CAPACITOR, POLY, 0.1 UF, 1%, 100V	
42	055-961	C11	CAPACITOR, POLY, 0.33 UF, 1%, 100V	
43	055-588	C34	CAPACITOR, MYLAR, 0.56 UF, 10%, 50V	
				H

ASSEMBLY NO. 1373150 TITLE CAPSTAN SERVO PWA, MODULE NO. 2, NTSC/PAL-M

ITEM NO.	AMPEX PART NO.	REFERENCE NUMBER	DESCRIPTION	JEDEC NO. OR MFR. PART NO.
44	044-299	R52	RESISTOR, VAR, 5K, 1W, 5%	
47	041-014	R55,58,61,64,72	RESISTOR, COMP, 10K, 1/2W, 5%	
48	041-015	R15	RESISTOR, COMP, 27K, 1/2W, 5%	
49	041-017	R34,50,71,73	RESISTOR, COMP, 33K, 1/2W, 5%	
50	041-020	R77	RESISTOR, COMP, 47K, 1/2W, 5%	
51	041-239	R44,56,59,62, 65,76	RESISTOR, COMP, 2.2K, 1/2W, 5%	
52	041-245	R1,10,12,14,19, 20-23,25,27, 29-33,38,45,49, 53,54,57,60,63, 81,111,116,117	RESISTOR, COMP, 1K, 1/2W, 5%	
55	041-282	R3,4,5,6,2	RESISTOR, COMP, 150 OHM, 1/2W, 5%	
56	041-331	R102	RESISTOR, COMP, 3.3K, 1/2W, 5%	
57	041-344	R51	RESISTOR, COMP, 390 OHM, 1/2W, 5%	
58	041-455	R83-86,119	RESISTOR, COMP, 6.2K, 1/2W, 5%	
59	041-516	R42	RESISTOR, COMP, 75 OHM, 1/2W, 5%	
60	066-183	R68,70,92	RESISTOR, MF, 60.4K, 1/8W, 1%	
61	062-970	R28	RESISTOR, MF, 5.23K, 1/8W, 1%	
62	062-624	R94	RESISTOR, MF, 1.00K, 1/8W, 1%	
63	062-625	R8	RESISTOR, MF, 1.21K, 1/8W, 1%	
64	062-643	R107	RESISTOR, MF, 2.00K, 1/8W, 1%	
65	062-693	R109	RESISTOR, MF, 20.0K, 1/8W, 1%	
66	062-847	R105	RESISTOR, MF, 100 OHM, 1/8W, 1%	
67	062-904	R7,106,108	RESISTOR, MF, 511 OHM, 1/8W, 1%	
68	062-922	R101	RESISTOR, MF, 909 OHM, 1/8W, 1%	
69	066-755	R16	RESISTOR, MF, 143K, 1/8W, 1%	
70	062-928	R96	RESISTOR, MF, 1.10K, 1/8W, 1%	
71	062-937	R99	RESISTOR, MF, 1,82K, 1/8W, 1%	
72	062-962	R78	RESISTOR, MF, 4.02K, 1/8W, 1%	
73	062-950	R36	RESISTOR, MF, 2.74K, 1/8W, 1%	
74	062-951	R41,69	RESISTOR, MF, 2.80K, 1/8W, 1%	
75	062-955	R37,40	RESISTOR, MF, 3.32K, 1/8W, 1%	
76	062-945	R104	RESISTOR, MF, 2.43K, 1/8W, 1%	
77	062-969	R47,79,80	RESISTOR, MF, 5.11K, 1/8W, 1%	
78	062-973	R39	RESISTOR, MF, 5.76K, 1/8W, 1%	
80	062-902	R74,75,110	RESISTOR, MF, 499 OHM, 1/8W, 1%	
81	062-982	R43,97	RESISTOR, MF, 9.09K, 1/8W, 1%	
82	062-983	R13,89,95,98	RESISTOR, MF, 10.0K, 1/8W, 1%	
83	062-968	R66	RESISTOR, MF, 4.99K, 1/8W, 1%	
84	062-988	R48	RESISTOR, MF, 13.7K, 1/8W, 1%	
85	062-989	R17	RESISTOR, MF, 14.0K, 1/8W, 1%	
86	066-007	R103	RESISTOR, MF, 27.4K, 1/8W, 1%	
87	066-806	R40	RESISTOR, MF, 43.2K, 1/8W, 1%	
88	066-011	R35	RESISTOR, MF, 39.2K, 1/8W, 1%	
				H

ASSEMBLY NO. 1373150 TITLE CAPSTAN SERVO PWA, MODULE NO. 2, NTSC/PAL-M

ITEM NO.	AMPEX PART NO.	REFERENCE NUMBER	DESCRIPTION	JEDEC NO. OR MFR. PART NO.
89	066-009	R90	RESISTOR, MF, 33.2K, 1/8W, 1%	
90	066-078	R100	RESISTOR, MF, 3.24K, 1/8W, 1%	
91	062-941	R67	RESISTOR, MF, 2.21K, 1/8W, 1%	
92	066-656	R11,26,82	RESISTOR, MF, 30.1K, 1/8W, 1%	
93	062-642	R114	RESISTOR, MF, 6.81K, 1/8W, 1%	
94	066-657	R24	RESISTOR, MF, 38.3K, 1/8W, 1%	
95	062-995	R9	RESISTOR, MF, 16.5K, 1/8W, 1% (NTSC)	
96	066-009	R9	RESISTOR, MF, 33.2K, 1/8W, 1% (PAL-M)	
97	062-987	R18	RESISTOR, MF, 13.3K, 1/8W, 1% (NTSC)	
98	066-007	R18	RESISTOR, MF, 27.4K, 1/8W, 1% (PAL-M)	
99	062-949	R115	RESISTOR, MF, 2.67K, 1/8W, 1%	
100	066-061	R87	RESISTOR, MF, 13.0K, 1/8W, 1%	
101	586-048	A59	INTEGRATED CIRCUIT	F711
102	586-075	A3-5,7,9,10,12,15, 26,28,29,35,38, 40,45,53,48	INTEGRATED CIRCUIT	SN7400N
103	586-440	A50	INTEGRATED CIRCUIT	F747
104	586-108	A1,19,34	INTEGRATED CIRCUIT	SN7474N
105	586-261	A51,52	INTEGRATED CIRCUIT	LM302H
106	586-269	A47,57,58	INTEGRATED CIRCUIT	F741
107	586-283	A30,32,33	INTEGRATED CIRCUIT	SN7493N
108	586-309	A18,20,22,37,44, 55	INTEGRATED CIRCUIT	F9601
109	586-326	A8,16,39,49	INTEGRATED CIRCUIT	SN7404N
110	586-327	A11,14,60,61	INTEGRATED CIRCUIT	SN74H11N
111	586-533	A21,23,24,36	INTEGRATED CIRCUIT	SN74121N
112	586-581	A56	INTEGRATED CIRCUIT	SN7403N
113	586-759	A2,6,13,17,25	INTEGRATED CIRCUIT	SN7408N
114	586-800	A41,42,43	INTEGRATED CIRCUIT	SN74193N
115	587-084	A31	INTEGRATED CIRCUIT	SN7492N
116	586-167	A27	INTEGRATED CIRCUIT	SN74196N
117	587-026	A46,54	INTEGRATED CIRCUIT	LM311H
118	120-639	S2	SWITCH, TOGGLE, PANEL MTG	
119	120-940	S1	SWITCH, PUSH, PANEL MTG	
121	280-130		PAD, MTG, TRANS, T0-18	
122	250-188		BUMPER, PAD	
124	143-981		JACK, PC, CLOSED ENTRY, REF: J1-8	
125	602-012		PLUG, SHORTING, REF: J1-8	
127	587-168	A62	INTEGRATED CIRCUIT	

H

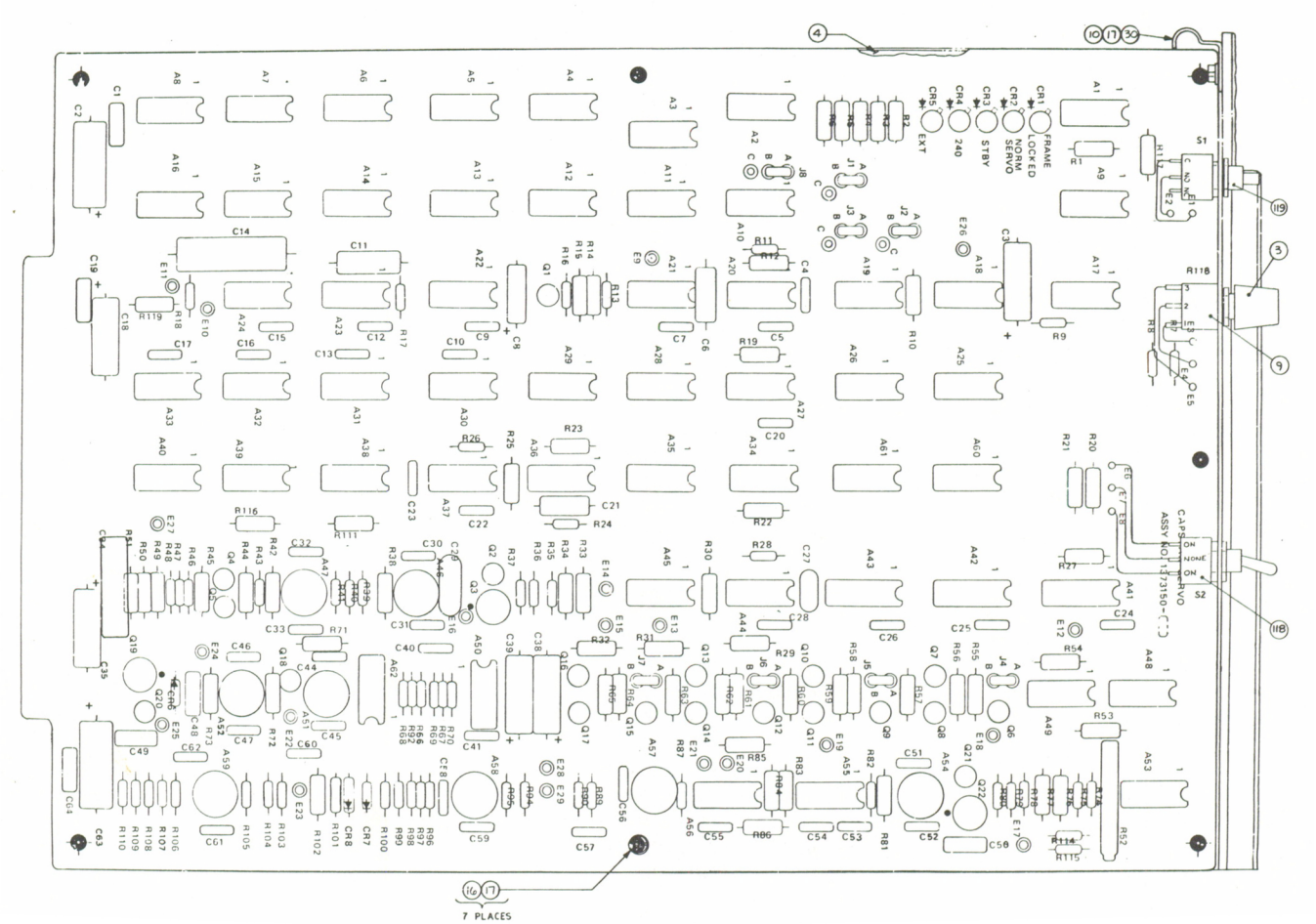

Assembly No. 1373150. Capstan Servo PWA, Module No. 2, NTSC/PAL-M

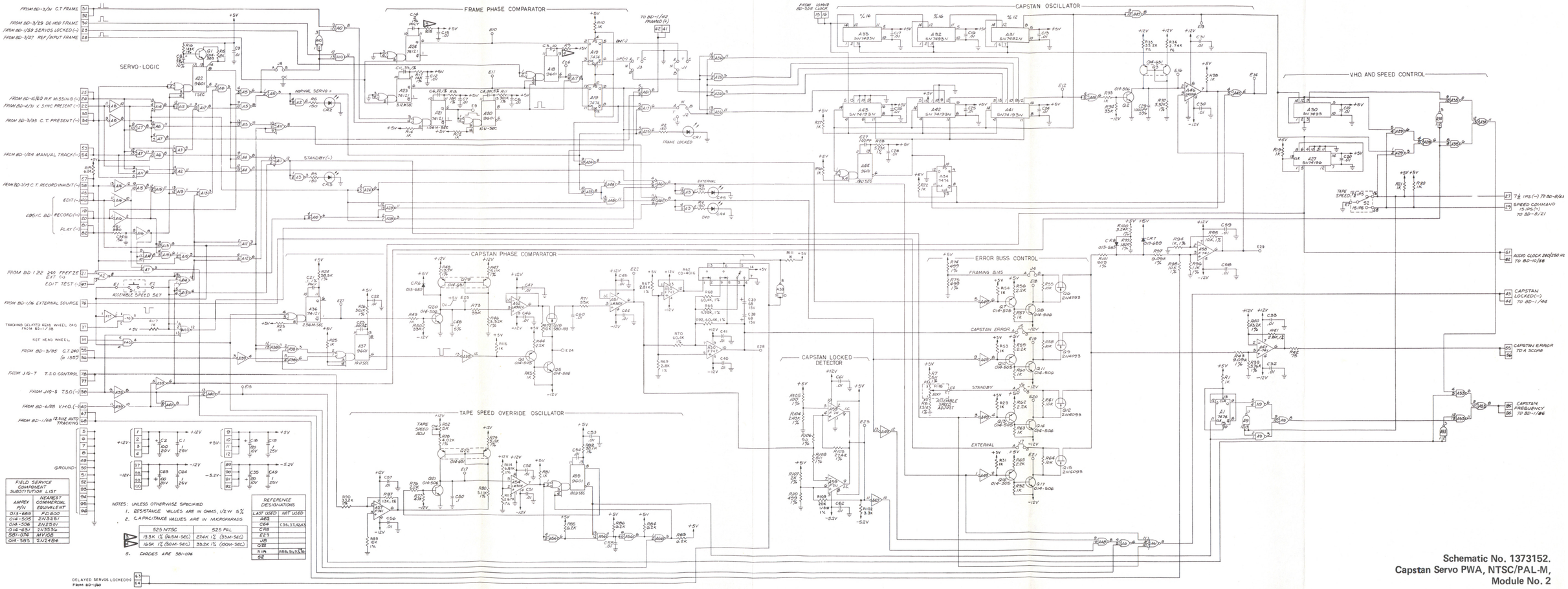
SERVO-LOGIC
FRAME PHASE COMPARATOR
CAPSTAN OSCILLATOR
V.H.O. AND SPEED CONTROL
CAPSTAN PHASE COMPARATOR
ERROR BUSS CONTROL
CAPSTAN LOCKED DETECTOR
TAPE SPEED OVERRIDE OSCILLATOR
FIELD SERVICE COMPONENT SUBSTITUTION LIST
NOTES: UNLESS OTHERWISE SPECIFIED
1. RESISTANCE VALUES ARE IN OHMS, 1/2W 5%
2. CAPACITANCE VALUES ARE IN MICROFARADS
5. DIODES ARE 581-076
REFERENCE DESIGNATIONS
Schematic No. 1373152.
Capstan Servo PWA, NTSC/PAL-M,
Module No. 2
11-19/20
AMPEX 180917B-02

ITEM NO.	AMPEX PART NO.	REFERENCE NUMBER	DESCRIPTION	JEDEC NO. OR MFR. PART NO.
	1373319-02		CAPSTAN SERVO PWA, PAL/SECAM	
2	1373321		SCHEMATIC	
3	1373272-01		SHIELD, PWB	
5	1373285-02		OVERLAY	
6	1373227-01		CONTACT, GND	
7	6000001-20		KNOB, POINTER, REF: R114	
8	473-325		SCREW, SEM, PAN HD, NO. 4-40 X 0.312 LG	
9	501-169		WASHER, SM PATT, NO. 4	
10	471-325		SCREW, MACH, FLAT HD, NO. 4-40 X 0.187 LG	
11	496-004		NUT, ASSEM WASH, NO. 4-40	
13	1373273-13		HANDLE, MODULE	
14	013-689	CR6,7,8	DIODE	FD600
15	581-074	CR1-5	DIODE, LIGHT EMITTING	MV10B
17	014-383	Q1	TRANSISTOR	2N2484
18	014-505	Q3,6-9	TRANSISTOR	2N3251
19	014-506	Q2,5,13,15,17, 19,20,21	TRANSISTOR	2N2501
20	014-631	Q4,11,22	TRANSISTOR, DUAL	2N3536
21	580-133	Q10,12,14,16,18	TRANSISTOR	2N4093
23	030-057	C9-13,16-20,23, 25,26,29-34,38-40,42-44,47,48, 50,53,54,57-60	CAPACITOR, CER, 0.01 UF, 100V, 20%	
25	030-094	C1,15,45,51	CAPACITOR, MONO, 1 UF, 25V, 20%	
27	034-153	C24	CAPACITOR, MICA, 1000 PF, 500V, 5%	
28	034-935	C28	CAPACITOR, MICA, 240 PF, 500V, 5%	
30	035-734	C49,55,56	CAPACITOR, MYLAR, 0.01 UF, 50V, 5%	
31	035-893	C41,52	CAPACITOR, MYLAR, 0.1 UF, 50V, 5%	
32	055-166	C4,21	CAPACITOR, MYLAR, 0.001 UF, 50V, 5%	
34	037-186	C14,35	CAPACITOR, TANT, 120 UF, 10V, 10%	
35	037-620	C2,46	CAPACITOR, TANT, 100 UF, 20V, 10%	
36	037-996	C3	CAPACITOR, TANT, 10 UF, 35V, 10%	
38	037-749	C36,37	CAPACITOR, TANT, 68 UF, 15V, 10%	
40	037-991	C6	CAPACITOR, TANT, 22 UF, 15V, 10%	
41	069-028	C8	CAPACITOR, POLYCARB, 2 UF, 1%, 100V	
42	055-808	C5	CAPACITOR, POLYCARB, 0.22 UF, 1%, 100V	
43	055-810	C22	CAPACITOR, POLYCARB, 0.1 UF, 1%, 100V	
44	055-961	C7	CAPACITOR, POLYCARB, 0.33 UF, 1%, 100V	
45	055-588	C27	CAPACITOR, MYLAR, 0.56 UF, 10%, 50V	
47	044-299	R79	RESISTOR, VAR' 5K, 1W, 5%	
48	058-474	R114	RESISTOR, VAR, 500 OHM, 1/2W, 10%	
50	041-014	R54,57,61,66,75	RESISTOR, COMP, 10K, 1/2W, 5%	
51	041-309	R13	RESISTOR, COMP, 8.2K, 1/2W, 5%	
52	041-017	R35,51,74,76	RESISTOR, COMP, 33K, 1/2W, 5%	
53	041-020	R83	RESISTOR, COMP, 47K, 1/2W, 5%	
				E

ASSEMBLY NO. 1373041 TITLE CAPSTAN SERVO PWA, MODULE NO. 2, PAL/SECAM

ITEM NO.	AMPEX PART NO.	REFERENCE NUMBER	DESCRIPTION	JEDEC NO. OR MFR. PART NO.
54	041-239	R45,55,58,62, 67,82	RESISTOR, COMP, 2.2K, 1/2W, 5%	
55	041-245	R6,7,9,10,12, 21-25,27,29,30, 31,33,34,39,46, 50,53,56,59,60, 63,64,65,77,87	RESISTOR, COMP, 1K, 1/2W, 5%	
56	041-282	R1-5	RESISTOR, COMP, 150 OHM, 1/2W, 5%	
57	041-331	R102	RESISTOR, COMP, 3.3K, 1/2W, 5%	
58	041-344	R52	RESISTOR, COMP, 390 OHM, 1/2W, 5%	
59	041-455	R17,78,89,90,111	RESISTOR, COMP, 6.2K, 1/2W, 5%	
60	041-516	R43	RESISTOR, COMP, 75 OHM, 1/2W, 5%	
62	062-968	R71	RESISTOR, MF, 4.99K, 1/8W, 1%	
63	062-624	R94	RESISTOR, MF, 1.00K, 1/8W, 1%	
64	062-625	R20	RESISTOR, MF, 1.21K, 1/8W, 1%	
65	062-643	R107	RESISTOR, MF, 2.00K, 1/8W, 1%	
66	062-693	R109	RESISTOR, MF, 20.0K, 1/8W, 1%	
67	062-847	R105	RESISTOR, MF, 100 OHM, 1/8W, 1%	
68	062-904	R19,106,108	RESISTOR, MF, 511 OHM, 1/8W, 1%	
69	062-922	R101	RESISTOR, MF, 909 OHM, 1/8W, 1%	
70	066-155	R14	RESISTOR, MF, 412K, 1/8W, 1%	
71	062-928	R96	RESISTOR, MF, 1.10K, 1/8W, 1%	
72	062-937	R99	RESISTOR, MF, 1.82K, 1/8W, 1%	
73	062-962	R84	RESISTOR, MF, 4.02K, 1/8W, 1%	
74	062-950	R37	RESISTOR, MF, 2.74K, 1/8W, 1%	
75	062-951	R42,70	RESISTOR, MF, 2.80K, 1/8W, 1%	
76	062-955	R38,47	RESISTOR, MF, 3.32K, 1/8W, 1%	
77	062-945	R104	RESISTOR, MF, 2.43K, 1/8W, 1%	
78	062-969	R48,85,86	RESISTOR, MF, 5.11K, 1/8W, 1%	
79	062-973	R40	RESISTOR, MF, 5.76K, 1/8W, 1%	
80	062-902	R80,81,110	RESISTOR, MF, 499 OHM, 1/8W, 1%	
81	062-982	R44,97	RESISTOR, MF, 9.09K, 1/8W, 1%	
82	062-983	R11,92,95,98	RESISTOR, MF, 10.0K, 1/8W, 1%	
83	066-183	R68,72,73	RESISTOR, MF, 60.4K, 1/8W, 1%	
84	062-988	R49	RESISTOR, MF, 13.7K, 1/8W, 1%	
85	062-989	R15	RESISTOR, MF, 14.0K, 1/8W, 1%	
86	066-007	R16,103	RESISTOR, MF, 27.4K, 1/8W, 1%	
87	066-806	R41	RESISTOR, MF, 43.2K, 1/8W, 1%	
88	066-011	R36	RESISTOR, MF, 39.2K, 1/8W, 1%	
89	066-009	R18,93	RESISTOR, MF, 33.2K, 1/8W, 1%	
90	066-078	R100	RESISTOR, MF, 3.24K, 1/8W, 1%	
91	062-941	R69	RESISTOR, MF, 2.21K, 1/8W, 1%	
92	066-656	R8,26,88	RESISTOR, MF, 30.1K, 1/8W, 1%	
93	062-642	R112	RESISTOR, MF, 6.81K, 1/8W, 1%	
94	066-657	R28	RESISTOR, MF, 38.3K, 1/8W, 1%	
				E

ASSEMBLY NO. 1373041 TITLE CAPSTAN SERVO PWA, MODULE NO. 2, PAL/SECAM

ITEM NO.	AMPEX PART NO.	REFERENCE NUMBER	DESCRIPTION	JEDEC NO. OR MFR. PART NO.
95	062-970	R32	RESISTOR, MF, 5.23K, 1/8W, 1%	
96	062-949	R113	RESISTOR, MF, 2.67K, 1/8W, 1%	
97	066-061	R91	RESISTOR, MF, 13.0K, 1/8W, 1%	
99	586-048	A62	INTEGRATED CIRCUIT	F711
100	586-075	A3-5,7,9,10,12, 15,20,28,29,37, 40,42,47,50,56	INTEGRATED CIRCUIT	SN7400N
101	586-440	A52	INTEGRATED CIRCUIT	F747
102	586-108	A1,19,36	INTEGRATED CIRCUIT	SN7474N
103	586-261	A54,55	INTEGRATED CIRCUIT	LM302H
104	586-269	A49,60,61	INTEGRATED CIRCUIT	F741
105	586-283	A30,32,33	INTEGRATED CIRCUIT	SN7493N
106	586-309	A18,20,22,39,46, 58	INTEGRATED CIRCUIT	F9601
107	586-326	A8,16,41,51	INTEGRATED CIRCUIT	SN7404N
108	586-327	A11,14,34,35	INTEGRATED CIRCUIT	SN74H11N
109	586-533	A21,23,24,38	INTEGRATED CIRCUIT	SN74121N
110	586-581	A59	INTEGRATED CIRCUIT	SN7403N
111	586-759	A2,6,13,17,25	INTEGRATED CIRCUIT	SN7408N
112	586-800	A43,44,45	INTEGRATED CIRCUIT	SN74193N
113	587-084	A31	INTEGRATED CIRCUIT	SN7492N
114	587-167	A27	INTEGRATED CIRCUIT	SN74196N
115	587-026	A48,57	INTEGRATED CIRCUIT	LM311H
116	587-168	A53	INTEGRATED CIRCUIT	CD4016
118	120-639	S2	SWITCH, TOGGLE, SPDT	
119	120-940	S1	SWITCH, PB, SPDT	
122	280-130		PAD, MTG, XSTR, T0-18	
123	143-981		JACK, PC, CLOSED ENTRY	
125	602-012		PLUG, SHORTING	

E

SHEET 3 OF 3

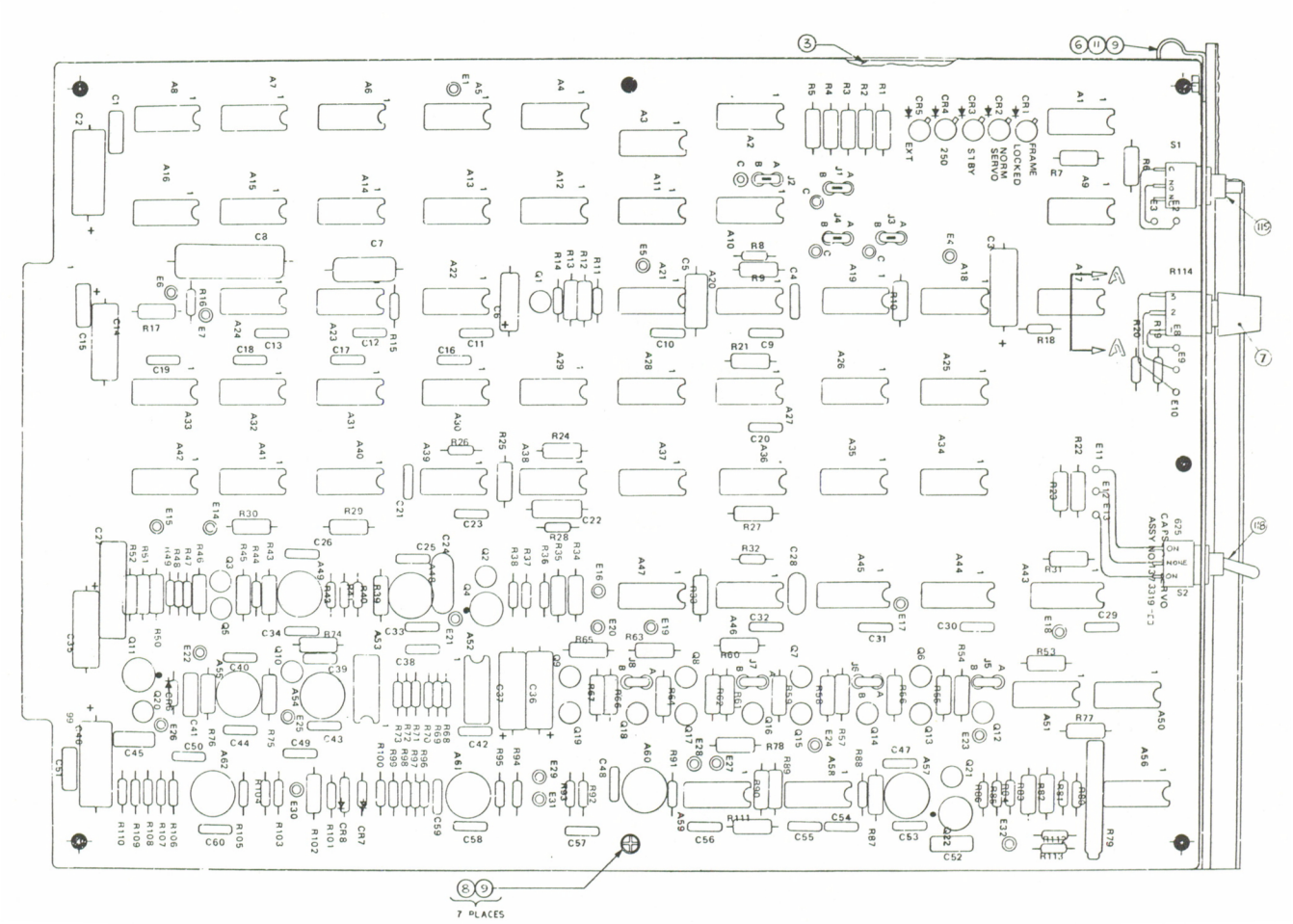

Assembly No. 1373041. Capstan Servo PWA, Module No. 2, PAL/SECAM

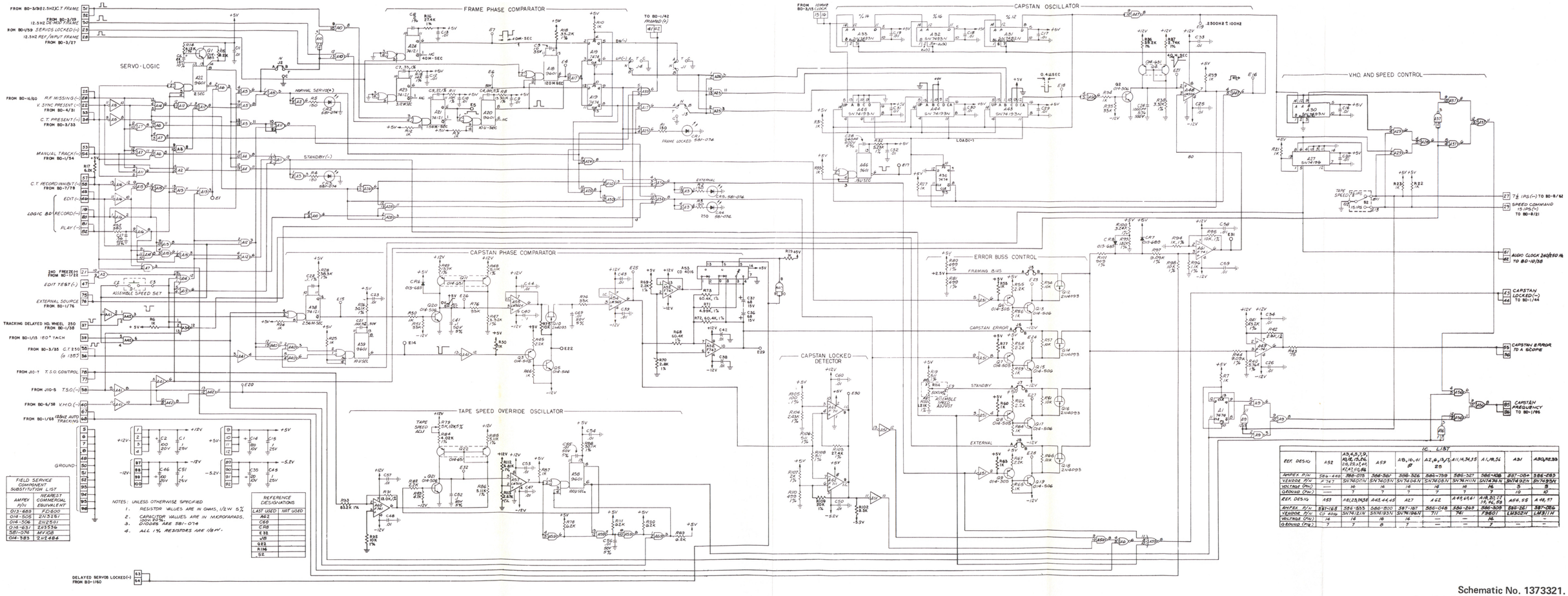

IC. LIST

REF. DESIG	A52	A3,4,5,7,9, 10,12,13,24, 26,28,31,41, 42,43,46	A59	A8,16,41 & 25	A2,6,13,17, 20	A11,14,34,35	A1,19,36	A31	A30,A33
AMPEX P/N	586-440	586-075	586-367	586-326	586-339	586-309	586-108	587-084	586-283
VENDOR P/N	F747	SN7400N	SN7402N	SN7404N	SN7408N	SN7410N	SN74H74N	SN74S74N	SN74S51N
VOLTAGE (Vdc)	—	14	14	14	14	14	14	5	5
GROUND (Vdc)	—	7	7	7	7	7	7	10	10
REF. DESIG	A53	A12,23,38, 39,40,44,45	A47	A27	A22	A48,49,51	A18,20,21 19,44,50	A24,55	A48,52
AMPEX P/N	587-168	586-553	586-800	587-107	586-048	586-253	586-309	586-281	587-086
VENDOR P/N	CD 4016	SN74121N	SN74193N	SN74196N	711	741	F9601	LM302H	LM311H
VOLTAGE (Vdc)	14	14	16	16	—	—	14	—	—
GROUND (Vdc)	7	7	8	7	—	—	7	—	—

Schematic No. 1373321.
Capstan Servo PWA, PAL/SECAM,
Module No. 2

ITEM NO.	AMPEX PART NO.	REFERENCE NUMBER	DESCRIPTION	JEDEC NO. OR MFR. PART NO.
	1373168-04		CONTROL TRACK AND SYNC PROCESSOR PWA, NTSC	
3	1373170		SCHEMATIC	
4	1373227-01		CONTACT, GND	
5	1373272-01		SHIELD, PWB	
6	1373285-03		OVERLAY	
7	1373273-13		HANDLE, MODULE	
8	471-325		SCREW, FLAT HD, NO. 4-40 X 0.188 LG	
9	473-325		SCREW, MACH ASSY, NO. 4 X 0.312 LG	
10	496-004		NUT, ASSEM, NO. 4	
11	501-169		WASHER, PLAIN, NO. 4	
12	013-257	VR1,2	DIODE	1N753A
13	013-983	VR3	DIODE	1N752A
15	013-689	CR1-10	DIODE	FD600
17	580-166	Q5	TRANSISTOR	2N5322
18	580-167	Q6	TRANSISTOR	1N5320
19	014-506	Q1-3	TRANSISTOR	2N2501
20	014-247	Q4,7	TRANSISTOR	2N2219
21	014-600	Q8	TRANSISTOR	2N3912
22	014-505	Q9	TRANSISTOR	2N3251
24	030-057	C1,2,4-7,9,10,14, 15,18,19,26,28, 29-31,33-36,39, 40,43,44,49,50, 55,60,61,64,65, 67,68,70,73-76, 78,80,84,85,87, 90,92,96,99,100, 103,105,107,112, 116,119,121-124, 127	CAPACITOR, CER, DISC, 0.01 UF, 100V, 20%	
28	055-166	C82,101,113, 114,128	CAPACITOR, MYLAR, 0.001 UF, 50V, 5%	
30	035-734	C89,91,95,97, 118,120,129	CAPACITOR, MYLAR, 0.01 UF, 50V, 5%	
31	035-828	C93,104,115	CAPACITOR, MYLAR, 0.022 UF, 50V, 5%	
32	035-883	C69,71	CAPACITOR, MYLAR, 0.068 UF, 50V, 5%	
33	035-893	C27	CAPACITOR, MYLAR, 0.1 UF, 50V, 5%	
34	055-853	C77	CAPACITOR, MYLAR, 0.33 UF, 50V, 5%	
35	035-730	C98,102	CAPACITOR, MYLAR, 0.0047 UF, 50V, 5%	
36	035-817	C130	CAPACITOR, MYLAR, 0.015 UF, 50V, 5%	
39	056-452	C63	CAPACITOR, MICA, 6.3 PF, 500V, 5%	
40	034-943	C47,86	CAPACITOR, MICA, 27 PF, 500V, 5%	
41	034-184	C20,21,41,42	CAPACITOR, MICA, 68 PF, 500V, 5%	

N

ASSEMBLY NO. 1373168 TITLE CONTROL TRACK AND SYNC PROCESSOR PWA, MODULE NO. 3, NTSC

ITEM NO.	AMPEX PART NO.	REFERENCE NUMBER	DESCRIPTION	JEDEC NO. OR MFR. PART NO.
42	034-718	C22,23	CAPACITOR, MICA, 510 PF, 500V, 5%	
43	034-213	C16,37,48,62	CAPACITOR, MICA, 150 PF, 500V, 5%	
44	056-163	C83	CAPACITOR, MICA, 470 PF, 500V, 5%	
45	056-216	C11	CAPACITOR, MICA, 500 PF, 500V, 1%	
48	037-164	C8,17,38,94, 106,117	CAPACITOR, TANT, 1 UF, 35V, 10%	
49	037-367	C3,51,52	CAPACITOR, TANT, 2.2 UF, 20V, 10%	
50	037-985	C32	CAPACITOR, TANT, 15 UF, 20V, 10%	
51	037-991	C125,126	CAPACITOR, TANT, 22 UF, 15V, 10%	
52	037-740	C57,58,72	CAPACITOR, TANT, 33 UF, 10V, 10%	
53	037-749	C79,81	CAPACITOR, TANT, 68 UF, 15V, 10%	
54	037-620	C25,111	CAPACITOR, TANT, 100 UF, 20V, 10%	
55	037-186	C46,56,109	CAPACITOR, TANT, 120 UF, 10V, 10%	
56	037-507	C53,54	CAPACITOR, TANT, 150 UF, 15V, 10%	
59	030-094	C24,45,108,110	CAPACITOR, MONO, 1 UF, 25V, 20%	
61	055-809	C13	CAPACITOR, POLYCARBONATE, 0.047, 100V, 1%	
62	069-018	C12	CAPACITOR, POLYCARBONATE, 0.39, 100V, 1%	
63	055-638	C88	CAPACITOR, POLYCARBONATE, 0.01, 100V, 1%	
64	055-808	C66	CAPACITOR, POLYCARBONATE, 0.22, 100V, 1%	
65	041-002	R58,59	RESISTOR, CARBON, 10 OHM, 1/2W, 5%	
66	041-283	R31	RESISTOR, CARBON, 47 OHM, 1/2W, 5%	
67	041-516	R47,81,105	RESISTOR, CARBON, 75 OHM, 1/2W, 5%	
68	041-334	R23	RESISTOR, CARBON, 200 OHM, 1/2W, 5%	
70	041-245	R1,7,11,48,61,62, 70,76,87,89,91, 93,98,99,102, 104,106,112,115, 122,137,138,141	RESISTOR, CAR, 1K, 1/2W, 5%	
71	041-013	R28	RESISTOR, CAR, 4.7K, 1/2W, 5%	
72	041-001	R68	RESISTOR, CAR, 5.1K, 1/2W, 5%	
74	041-014	R12,13,14,20, 29,40,63	RESISTOR, CAR, 10K, 1/2W, 5%	
75	041-477	R49	RESISTOR, CAR, 13K, 1/2W, 5%	
76	041-322	R56,57	RESISTOR, CAR, 18K, 1/2W, 5%	
77	041-017	R6	RESISTOR, CAR, 33K, 1/2W, 5%	
78	041-020	R69	RESISTOR, CAR, 47K, 1/2W, 5%	
79	041-021	R72-74	RESISTOR, CAR, 51K, 1/2W, 5%	
80	041-420	R129	RESISTOR, CAR, 12K, 1/2W, 5%	
81	041-316	R130	RESISTOR, CAR, 2.4K, 1/2W, 5%	
82	066-452	R109	RESISTOR, MF, 7.32K, 1/8W, 1%	
83	062-884	R4	RESISTOR, MF, 301 OHM, 1/8W, 1%	
84	062-624	R79,85	RESISTOR, MF, 1K, 1/8W, 1%	
85	062-932	R83	RESISTOR, MF, 1.5K, 1/8W, 1%	
86	062-950	R34	RESISTOR, MF, 2.74K, 1/8W, 1%	
87	062-951	R45,125	RESISTOR, MF, 2.8K, 1/8W, 1%	
88	066-062	R110	RESISTOR, MF, 3.65K, 1/8W, 1%	
89	062-966	R19,30,39,142	RESISTOR, MF, 4.75K, 1/8W, 1%	N

ASSEMBLY NO. 1373168 TITLE CONTROL TRACK AND SYNC PROCESSOR PWA, MODULE NO. 3, NTSC

ITEM NO.	AMPEX PART NO.	REFERENCE NUMBER	DESCRIPTION	JEDEC NO. OR MFR. PART NO.
90	062-969	R27,55	RESISTOR, MF, 5.11K, 1/8W, 1%	
91	062-973	R51,88,92,107, 121	RESISTOR, MF, 5.76K, 1/8W, 1%	
92	062-976	R90,101,114	RESISTOR, MF, 7.15K, 1/8W, 1%	
93	042-378	R84	RESISTOR, MF, 8.25K, 1/8W, 1%	
95	062-983	R8,10,24,25,33, 36,37,42,44,108	RESISTOR, MF, 10K, 1/8W, 1%	
96	062-970	R53,128	RESISTOR, MF, 5.23K, 1/8W, 1%	
97	062-694	R3	RESISTOR, MF, 15K, 1/8W, 1%	
98	062-941	R5,95,134	RESISTOR, MF, 2.21K, 1/8W, 1%	
99	066-001	R35	RESISTOR, MF, 22.6K, 1/8W, 1%	
100	066-762	R65,66	RESISTOR, MF, 29.4K, 1/8W, 1%	
101	066-656	R64,77	RESISTOR, MF, 30.1K, 1/8W, 1%	
102	066-925	R46	RESISTOR, MF, 22.1K, 1/8W, 1%	
103	066-011	R15-17	RESISTOR, MF, 39.2K, 1/8W, 1%	
104	066-012	R60	RESISTOR, MF, 40.2K, 1/8W, 1%	
105	066-060	R86	RESISTOR, MF, 26.1K, 1/8W, 1%	
106	066-014	R32	RESISTOR, MF, 47.5K, 1/8W, 1%	
107	066-004	R111	RESISTOR, MF, 24.3K, 1/8W, 1%	
108	062-997	R126	RESISTOR, MF, 18.2K, 1/8W, 1%	
110	066-389	R50,124	RESISTOR, MF, 90.9K, 1/8W, 1%	
111	066-763	R18,38	RESISTOR, MF, 321K, 1/8W, 1%	
112	066-764	R54	RESISTOR, MF, 226K, 1/8W, 1%	
113	066-028	R21,22,41,43	RESISTOR, MF, 332K, 1/8W, 1%	
114	062-880	R26,127	RESISTOR, MF, 249 OHM, 1/8W, 1%	
116	066-310	R9	RESISTOR, MF, 49.9K, 1/8W, 1%	
118	058-940	R52	RESISTOR, VAR, 5K, 1 TURN,	
119	058-170	R67	RESISTOR, VAR, 10K, 20 TURN	
120	066-936	R78,80	RESISTOR, MF, 44.2K, 1/8W, 1%	
121	062-974	R96,135	RESISTOR, MF, 6.19K, 1/8W, 1%	
122	066-006	R131,132	RESISTOR, MF, 26.7K, 1/8W, 1%	
123	044-741	R2	RESISTOR, VAR, 20K, 20 TURN	
124	041-345	R94,133	RESISTOR, CARBON, 51 OHM, 1/2W, 5%	
125	041-254	R97,136	RESISTOR, CARBON, 15K, 1/2W, 5%	
126	041-330	R144,145	RESISTOR, CARBON, 6.8K, 1/2W, 5%	
127	041-455	R71,75,82,100, 103,113,116-120, 123,139,140,143	RESISTOR, CARBON, 6.2K, 1/2W, 5%	
128	587-416	A30,31	INTEGRATED CIRCUIT	9600
129	586-437	A3,16,19,34	INTEGRATED CIRCUIT	LM301AH
130	586-261	A4,20,21	INTEGRATED CIRCUIT	LM302H
131	586-124	A1,42,43	INTEGRATED CIRCUIT	SN72710L
132	586-269	A2,5,6,9-13,15, 26,56,57	INTEGRATED CIRCUIT	SN741HC
133	586-075	A25,32	INTEGRATED CIRCUIT	SN7400N
				N

ASSEMBLY NO. 1373168 TITLE CONTROL TRACK AND SYNC PROCESSOR PWA, MODULE NO. 3, NTSC

ITEM NO.	AMPEX PART NO.	REFERENCE NUMBER	DESCRIPTION	JEDEC NO. OR MFR. PART NO.
134	586-830	A7	INTEGRATED CIRCUIT	SN74S00N
135	586-326	A14,24,27,46	INTEGRATED CIRCUIT	SN7404N
136	586-325	A44,47,51,54,58	INTEGRATED CIRCUIT	SN7405N
137	586-759	A18,33,36,39,48, 53	INTEGRATED CIRCUIT	SN7408N
138	586-327	A22	INTEGRATED CIRCUIT	SN74H11N
139	586-108	A23	INTEGRATED CIRCUIT	SN7474N
140	586-533	A8,35,37,40,41, 45,49,52,55	INTEGRATED CIRCUIT	SN74121N
141	586-309	A29	INTEGRATED CIRCUIT	9601DC
142	586-617	A17	INTEGRATED CIRCUIT	9602DC
143	586-077	A38	INTEGRATED CIRCUIT	SN7420N
144	587-249	A50	INTEGRATED CIRCUIT	SN7409N
146	586-690	A28	INTEGRATED CIRCUIT	SN7406N
147	017-060	Y1	CRYSTAL, 10.0 MHZ, ±0.005%	
151	120-440	S1	SWITCH, SPDT, 3 POSITION	
154	540-063	L1	INDUCTOR, 10H, 3%	UTC-ML-8
157	250-188		BUMPER, PAD, BLK RBR, ADHESIVE BACK	
160	280-130		PAD, MTG, XSTR, T0-18, REF: Q1-3,8,9	
161	280-998		PAD, MTG, XSTR, T0-5, REF: Q4-7	
163	020-543	K1	RELAY, 12V	
164	020-407		PAD, MTG, RELAY	
				N

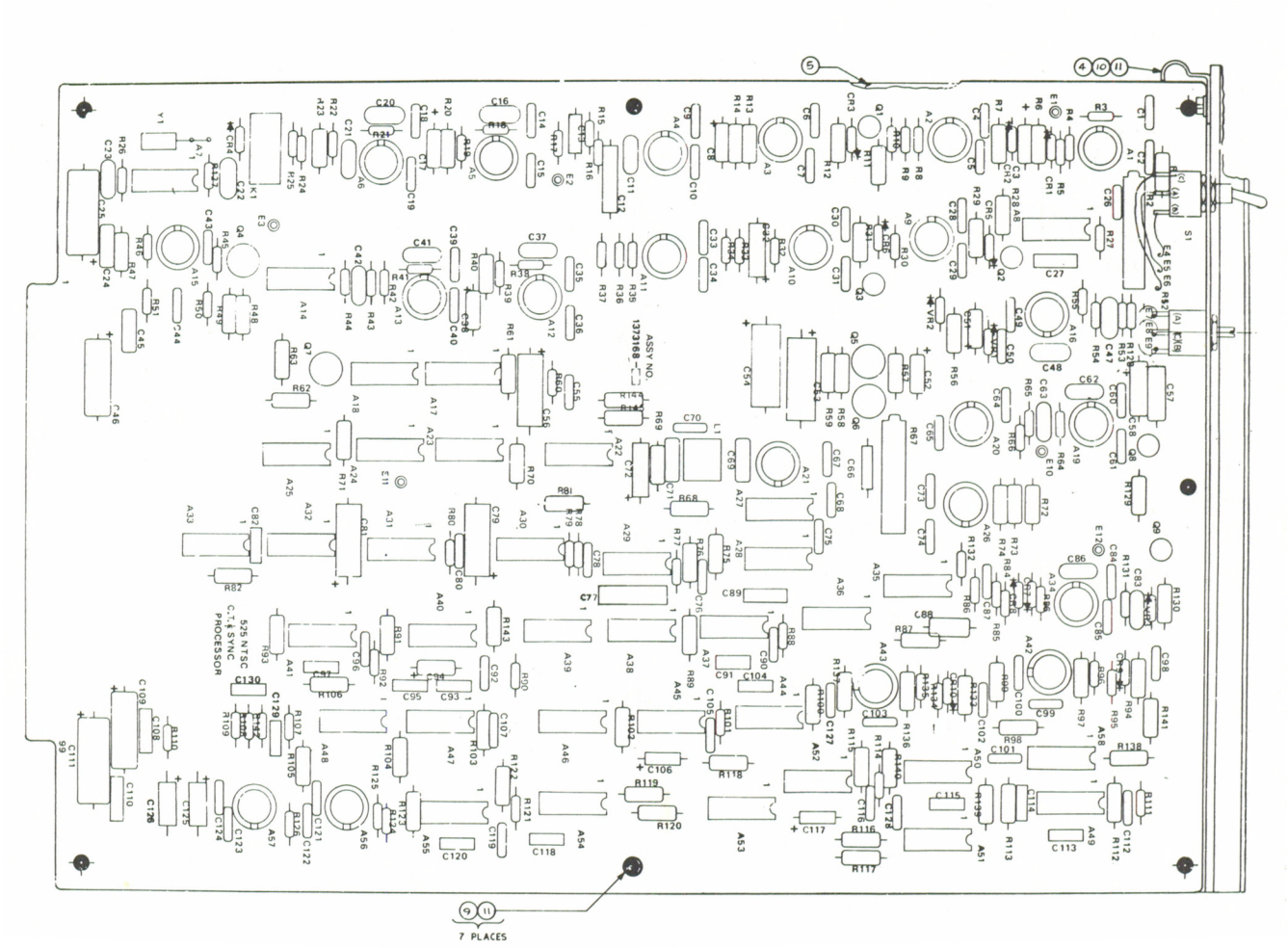

Assembly No. 1373168. Control Track and Sync Processor PWA, Module No. 3, NTSC

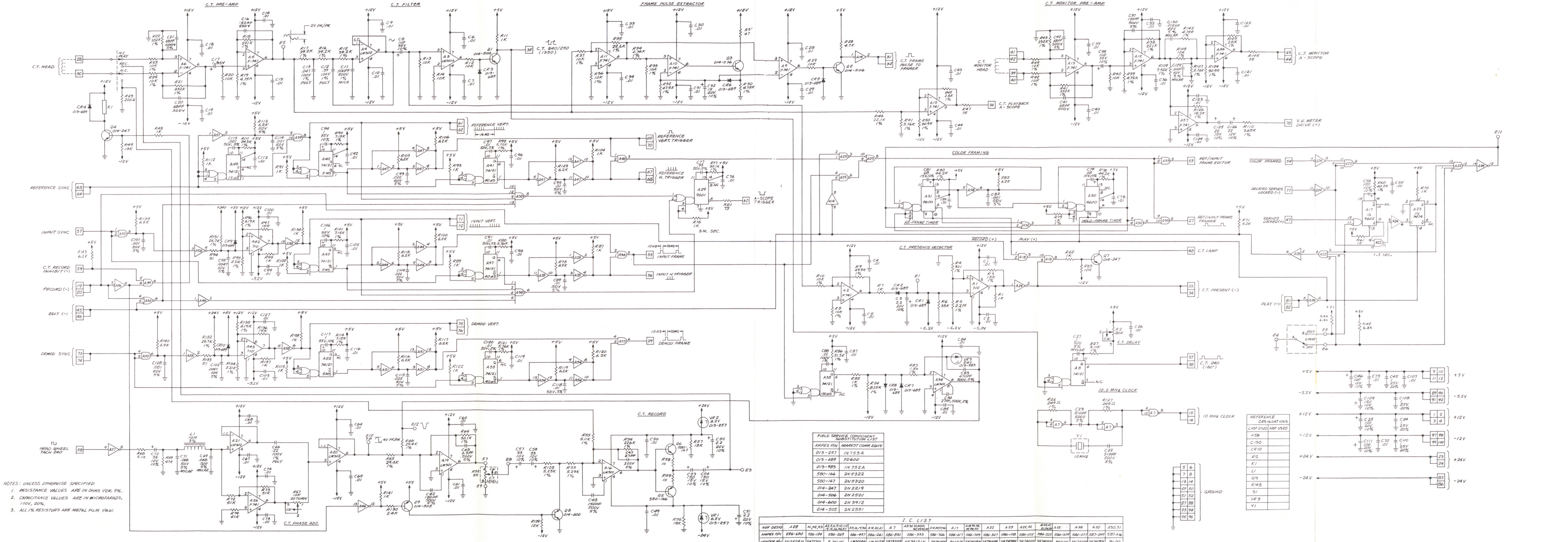

NOTES: UNLESS OTHERWISE SPECIFIED
1. RESISTANCE VALUES ARE IN OHMS 1/2W, 5%.
2. CAPACITANCE VALUES ARE IN MICROFARADS, 100V, 20%.
3. ALL 1% RESISTORS ARE METAL FILM 1/8W.

FIELD SERVICE COMPONENT SUBSTITUTION LIST

AMPEX P/N	NEAREST COMM. EQUIV.
013-257	1N753A
013-689	FD600
013-983	1N752A
580-166	2N5322
580-167	2N5320
014-247	2N2219
014-506	2N2501
014-600	2N3912
014-505	2N2351

I. C. LIST

REF DESIG	A28	A1,42,43	A2,5,6,9,10,11,12,13,15,26,56,57	A3,16,19,34	A4,20,21	A7	A8,35,37,40,41,45,49,52,55	A14,24,27,46	A17	A18,33,36,39,48,53	A22	A23	A25,32	A44,47,51,54,58	A29	A38	A50	A30,31
AMPEX P/N	586-690	586-124	586-269	586-437	586-261	586-830	586-533	586-326	586-617	586-759	586-327	586-108	586-075	586-325	586-309	586-077	587-249	587-416
VENDOR P/N	SN7406N	SN72710L	F 741HC	LM301AH	LM302H	SN7400N	SN74121N	SN7404N	9602DC	SN7408N	SN74H11N	SN7474N	SN7400N	SN7405N	9601DC	SN7420N	SN7409N	9600
VOLTAGE(PIN)	+5V (14)	+12V (8) -5.2V (4)	+12V (7) -12V (4)	+12V (7) -12V (4)	+12V (7) -12V (4)	+5V (14)	+5V (14)	+5V (14)	+5V (16)	+5V (14)	+5V (14)	+5 (14)	+5V (14)	+5V (14)	+5V (14)	+5V (14)	+5V (14)	+5V (14)
GROUND (PIN)	7	1	—	—	—	7	7	7	8	7	7	7	7	7	7	7	7	7

REFERENCE DESIGNATIONS

LAST USED	NOT USED
A58	
C130	
CR10	
E12	
K1	
L1	
Q9	
R145	
S1	
VR3	
Y1	

VR1

Schematic No. 1373170.
Control Track and Sync Processor PWA,
NTSC, Module No. 3

E

AMPEX 1809178-02

ITEM NO.	AMPEX PART NO.	REFERENCE NUMBER	DESCRIPTION	JEDEC NO. OR MFR. PART NO.
	1373261-01		CONTROL TRACK AND SYNC PROCESSOR PWA, PAL/SECAM, PAL-M	
3	1373263		SCHEMATIC	
4	1373227-01		CONTACT, GND	
5	1373272-01		SHIELD, PWB	
6	1373285-35		OVERLAY	
7	1373273-13		HANDLE, MODULE	
9	471-325		SCREW, FLAT HD, XREC, NO. 4-40 X 0.188 LG	
10	473-325		SCREW, MACH, PAN HD, XREC, NO. 4-40 X 0.312 LG	
12	496-004		NUT, ASSEM, NO. 4	
13	250-188		BUMPER, PAD	
14	501-169		WASHER, SM, NO. 4	
17	013-257	VR1,3	DIODE, ZENER	1N753A
18	013-689	CR1-11	DIODE	FD600
19	013-983	VR2	DIODE, ZENER	1N752A
22	014-383	Q11	TRANSISTOR	2N2484
23	014-247	Q4,5	TRANSISTOR	2N2219
24	014-505	Q7	TRANSISTOR	2N3251
25	014-506	Q1-3,10	TRANSISTOR	2N2501
26	014-600	Q6	TRANSISTOR	2N3912
27	580-166	Q9	TRANSISTOR	2N5322
28	580-167	Q8	TRANSISTOR	2N5320
32	030-057	C1-4,6-9,11,12, 16,17,20,21,28, 29,31-35,37-40, 43,44,49-51,54, 57,62-64,68,69, 71,78,83,84,86, 88,92-95,97,98, 101-104,106, 107,114,117,119, 121,123,125-127, 129,133,135, 144,145	CAPACITOR, CERAMIC, 0.01 UF, 100V, 20%	
35	035-598	C137	CAPACITOR, MYLAR, 0.047 UF, 50V, 5%	
36	035-730	C77,143	CAPACITOR, MYLAR, 0.0047 UF, 50V, 5%	
37	035-734	C56,58,65,76,79, 80,124,134,136, 138,147	CAPACITOR, MYLAR, 0.01 UF, 50V, 5%	
38	035-828	C59,66,75	CAPACITOR, MYLAR, 0.022 UF, 50V, 5%	
39	055-156	C128	CAPACITOR, MYLAR, 0.22 UF, 50V, 5%	
40	035-883	C108,109	CAPACITOR, MYLAR, 0.068 UF, 50V, 5%	
41	035-893	C36	CAPACITOR, MYLAR, 0.1 UF, 50V, 5%	
42	055-166	C55,72,73,81,87	CAPACITOR, MYLAR, 0.001 UF, 50V, 5%	
43	055-168	C146	CAPACITOR, MYLAR, 0.0056 UF, 50V, 5%	

B

ASSEMBLY NO. 1373261 TITLE CONTROL TRACK AND SYNC PROCESSOR PWA, MODULE NO. 3, PAL/SECAM, PAL-M

ITEM NO.	AMPEX PART NO.	REFERENCE NUMBER	DESCRIPTION	JEDEC NO. OR MFR. PART NO.
44	055-853	C132	CAPACITOR, MYLAR,0.33 UF, 50V, 5%	
45	035-817	C148	CAPACITOR, MYLAR, 0.015 UF, 50V, 5%	
47	056-174	C24,25	CAPACITOR, MICA, 510 PF, 300V, 5%	
48	034-184	C22,23,45,46	CAPACITOR, MICA, 68 PF, 500V, 5%	
49	034-213	C18,41,96,118	CAPACITOR, MICA, 150 PF, 500V, 5%	
50	034-943	C99,116	CAPACITOR, MICA, 27 PF, 500V, 5%	
51	056-163	C100	CAPACITOR, MICA, 470 PF, 500V, 5%	
52	056-216	C13	CAPACITOR, MICA, 500 PF, 500V, 1%	
53	056-452	C91	CAPACITOR, MICA, 6.3 PF, 500V, ±0.5 PF	
56	037-164	C10,19,42,70, 74,85	CAPACITOR, TANT, 1 UF, 35V, 10%	
57	037-186	C61,67,112	CAPACITOR, TANT, 120 UF, 10V, 10%	
58	037-367	C5,115,120	CAPACITOR, TANT, 2.2 UF, 20V, 10%	
59	037-507	C53,52,130,131	CAPACITOR, TANT, 150 UF, 15V, 10%	
60	037-620	C27,142	CAPACITOR, TANT, 100 UF, 20V, 10%	
61	037-740	C89,90,110	CAPACITOR, TANT, 33 UF, 10V, 10%	
63	037-985	C30,139,140	CAPACITOR, TANT, 15 UF, 20V, 10%	
64	037-991	C47,48	CAPACITOR, TANT, 22 UF, 15V, 20%	
67	030-094	C26,60,111,141	CAPACITOR, MONO, 1 UF, 25V, 20%	
69	055-638	C82	CAPACITOR, POLYCARB, 0.01 UF, 100V, 1%	
70	055-808	C105	CAPACITOR, POLYCARB, 0.22 UF, 100V, 1%	
71	055-809	C15	CAPACITOR, POLYCARB, 0.047 UF, 100V, 1%	
72	055-810	C113,122	CAPACITOR, POLYCARB, 0.1 UF,100V, 1%	
73	069-018	C14	CAPACITOR, POLYCARB, 0.39 UF, 100V, 1%	
76	041-001	R112	RESISTOR, COMP, 5.1K, 1/2W, 5%	
77	041-002	R125,126	RESISTOR, COMP, 10 OHM, 1/2W, 5%	
78	041-013	R21,36	RESISTOR, COMP, 4.7K, 1/2W, 5%	
79	041-014	R14-16,22,35,51, 65,138	RESISTOR, COMP, 10K, 1/2W, 5%	
80	041-015	R147	RESISTOR, COMP, 27K, 1/2W, 5%	
81	041-017	R8	RESISTOR, COMP, 33K, 1/2W, 5%	
82	041-020	R111	RESISTOR, COMP, 47K, 1/2W, 5%	
83	041-021	R108-110	RESISTOR, COMP, 51K, 1/2W, 5%	
85	041-245	R4,9,13,60,61, 64,71,75,76,77, 80,83,87,89,93, 96,97,103,119, 131,146,149,151, 157,161,165	RESISTOR, COMP, 1K, 1/2W, 5%	
86	041-254	R95,160	RESISTOR, COMP, 15K, 1/2W, 5%	
87	041-283	R30	RESISTOR, COMP, 47 OHM, 1/2W, 5%	
88	041-316	R118	RESISTOR, COMP, 2.4K, 1/2W, 5%	
				B

ASSEMBLY NO. 1373261 TITLE CONTROL TRACK AND SYNC PROCESSOR PWA, MODULE NO. 3, PAL/SECAM, PAL-M

ITEM NO.	AMPEX PART NO.	REFERENCE NUMBER	DESCRIPTION	JEDEC NO. OR MFR. PART NO.
89	041-322	R124,129	RESISTOR, COMP, 18K, 1/2W, 5%	
90	041-334	R25	RESISTOR, COMP, 200 OHM, 1/2W, 5%	
91	041-345	R152,162	RESISTOR, COMP, 51 OHM, 1/2W, 5%	
92	041-420	R117	RESISTOR, COMP, 12K, 1/2W, 5%	
93	041-455	R63,69,72,79,81, 88,90,91,98-101, 104,139,164	RESISTOR, COMP, 6.2K, 1/2W, 5%	
94	041-477	R59	RESISTOR, COMP, 13K, 1/2W, 5%	
95	041-516	R41,45,171	RESISTOR, COMP, 75 OHM, 1/2W, 5%	
99	041-538	R86,153,154, 156,168,169,170	RESISTOR, COMP, 6.2K, 1/4W, 5%	
102	041-378	R121	RESISTOR, MF, 8.25K, 1/8W, 1%	
103	062-601	R135	RESISTOR, MF, 100K, 1/8W, 1% (NTSC)	
104	062-624	R70,105,132	RESISTOR, MF, 1K, 1/8W, 1%	
105	062-694	R5	RESISTOR, MF, 15K, 1/8W, 1%	
106	062-932	R120	RESISTOR, MF, 1.5K, 1/8W, 1%	
107	062-941	R7,84,158	RESISTOR, MF, 2.21K, 1/8W, 1%	
108	062-950	R32	RESISTOR, MF, 2.74K, 1/8W, 1%	
109	062-951	R40,44	RESISTOR, MF, 2.8K, 1/8W, 1%	
110	062-880	R28,29	RESISTOR, MF, 249 OHM, 1/8W, 1%	
111	062-884	R6	RESISTOR, MF, 301 OHM, 1/8W, 1%	
112	062-962	R136	RESISTOR, MF, 4.02K, 1/8W, 1%	
113	062-966	R31,50,167	RESISTOR, MF, 4.75K, 1/8W, 1%	
114	062-968	R166	RESISTOR, MF, 4.99K, 1/8W, 1%	
115	062-969	R43,128	RESISTOR, MF, 5.11K, 1/8W, 1%	
116	062-970	R115,116	RESISTOR, MF, 5.23K, 1/8W, 1%	
117	062-973	R37,47,73,85,102	RESISTOR, MF, 5.76K, 1/8W, 1%	
118	062-974	R94,159	RESISTOR, MF, 6.19K, 1/8W, 1%	
119	062-976	R74,82,92	RESISTOR, MF, 7.15K, 1/8W, 1%	
120	062-983	R2,3,10,12,26, 27,33,53,55,48	RESISTOR, MF, 10K, 1/8W, 1%	
121	066-925	R38	RESISTOR, MF, 22.1K, 1/8W, 1%	
122	062-991	R140	RESISTOR, MF, 14.7K, 1/8W, 1%	
123	062-997	R57	RESISTOR, MF, 18.2K, 1/8W, 1%	
124	066-001	R1	RESISTOR, MF, 22.6K, 1/8W, 1%	
125	066-004	R78	RESISTOR, MF, 24.3K, 1/8W, 1%	
126	066-006	R155,163	RESISTOR, MF, 26.7K, 1/8W, 1%	
127	066-011	R17-19	RESISTOR, MF, 39.2K, 1/8W, 1%	
128	066-012	R62,68	RESISTOR, MF, 40.2K, 1/8W, 1%	
129	062-963	R142,143	RESISTOR, MF, 4.32K, 1/8W, 1%	
130	066-014	R34	RESISTOR, MF, 47.5K, 1/8W, 1%	
131	066-028	R23,24,52,54	RESISTOR, MF, 332 K, 1/8W, 1%	
132	066-034	R148	RESISTOR, MF, 475K, 1/8W, 1%	
133	066-062	R58	RESISTOR, MF, 3.65K, 1/8W, 1%	
				B

ASSEMBLY NO. 1373261 TITLE CONTROL TRACK AND SYNC PROCESSOR PWA, MODULE NO. 3, PAL/SECAM, PAL-M

ITEM NO.	AMPEX PART NO.	REFERENCE NUMBER	DESCRIPTION	JEDEC NO. OR MFR. PART NO.
134	066-310	R11	RESISTOR, MF, 49.9K, 1/8W, 1%	
135	066-389	R39,46	RESISTOR, MF, 90.9K, 1/8W, 1%	
136	066-442	R141,144,145	RESISTOR, MF,10.5K, 1/8W, 1%	
137	066-452	R56	RESISTOR, MF, 7.32K, 1/8W, 1%	
139	066-060	R106	RESISTOR, MF, 26.1K, 1/8W, 1%	
140	066-656	R114,130	RESISTOR, MF, 30.1K, 1/8W, 1%	
141	066-752	R150	RESISTOR, MF, 11.8K, 1/8W, 1%	
142	066-762	R122,123	RESISTOR, MF, 29.4K, 1/8W, 1%	
143	066-763	R20,49	RESISTOR, MF, 221K, 1/8W, 1%	
144	066-764	R127	RESISTOR, MF, 226K, 1/8W, 1%	
145	066-806	R66	RESISTOR, MF, 43.2K, 1/8W, 1%	
147	057-150	R133,134,137	RESISTOR, MF, 180K, 1/8W, 2% (NTSC)	
149	044-741	R42	RESISTOR, VAR, 20K, 1W, 10%	
150	058-170	R107	RESISTOR, VAR, 10K, 1W, 10%	
151	058-940	R113	RESISTOR, VAR, 5K, 1/2W, 10%	
152	587-416	A28,29	INTEGRATED CIRCUIT	9600PC
153	586-613	A22	INTEGRATED CIRCUIT	SN7406J
154	586-075	A20,30,52,66,70	INTEGRATED CIRCUIT	SN7400N
155	586-077	A38,63-65	INTEGRATED CIRCUIT	SN7420N
156	586-108	A25,69	INTEGRATED CIRCUIT	SN7474N
157	586-124	A2,34,40	INTEGRATED CIRCUIT	SN72710L
158	586-261	A5,47,49	INTEGRATED CIRCUIT	LM302H
159	586-269	A1,3,6,7,9-11, 13-16,48,50	INTEGRATED CIRCUIT	UA741HC
160	586-309	A54,56,61,62, 68,71	INTEGRATED CIRCUIT	9601DC
161	586-325	A24,27,36,41	INTEGRATED CIRCUIT	SN7405N
162	586-326	A18,53,57	INTEGRATED CIRCUIT	SN7404N
163	586-327	A17	INTEGRATED CIRCUIT	SN74H11N
164	586-437	A4,45,46,55	INTEGRATED CIRCUIT	LM301AH
165	586-533	A12,23,31-33,35, 37,42,44,58,59, 60,67	INTEGRATED CIRCUIT	SN74121N
166	586-617	A26	INTEGRATED CIRCUIT	9602DC
167	586-759	A19,21,39,51	INTEGRATED CIRCUIT	SN7408N
168	586-830	A8	INTEGRATED CIRCUIT	SN74S00N
169	587-249	A43	INTEGRATED CIRCUIT	SN7409N
170	017-060	Y1	CRYSTAL UNIT, QUARTZ, 10 MHZ, ±0.005%	
174	120-440	S1	SWITCH, TOGGLE, SPDT	
176	540-063	L1	INDUCTOR, 10H, 3%	
180	020-543	K1	RELAY, 12V	
181	020-407		PAD, RELAY MTG	
185	280-130		PAD, MTG, XSTR, T0-18, REF: Q1-3,6,7,10,11	
186	280-998		PAD, MTG, XSTR, REF: Q4,5,8,9	
190		R135	RESISTOR, MF, 40.2K, 1%, 1/8W (PAL-M)	
191		R133,134,137	RESISTOR, MF, 150K, 2%, 1/8W (PAL-M)	
				B

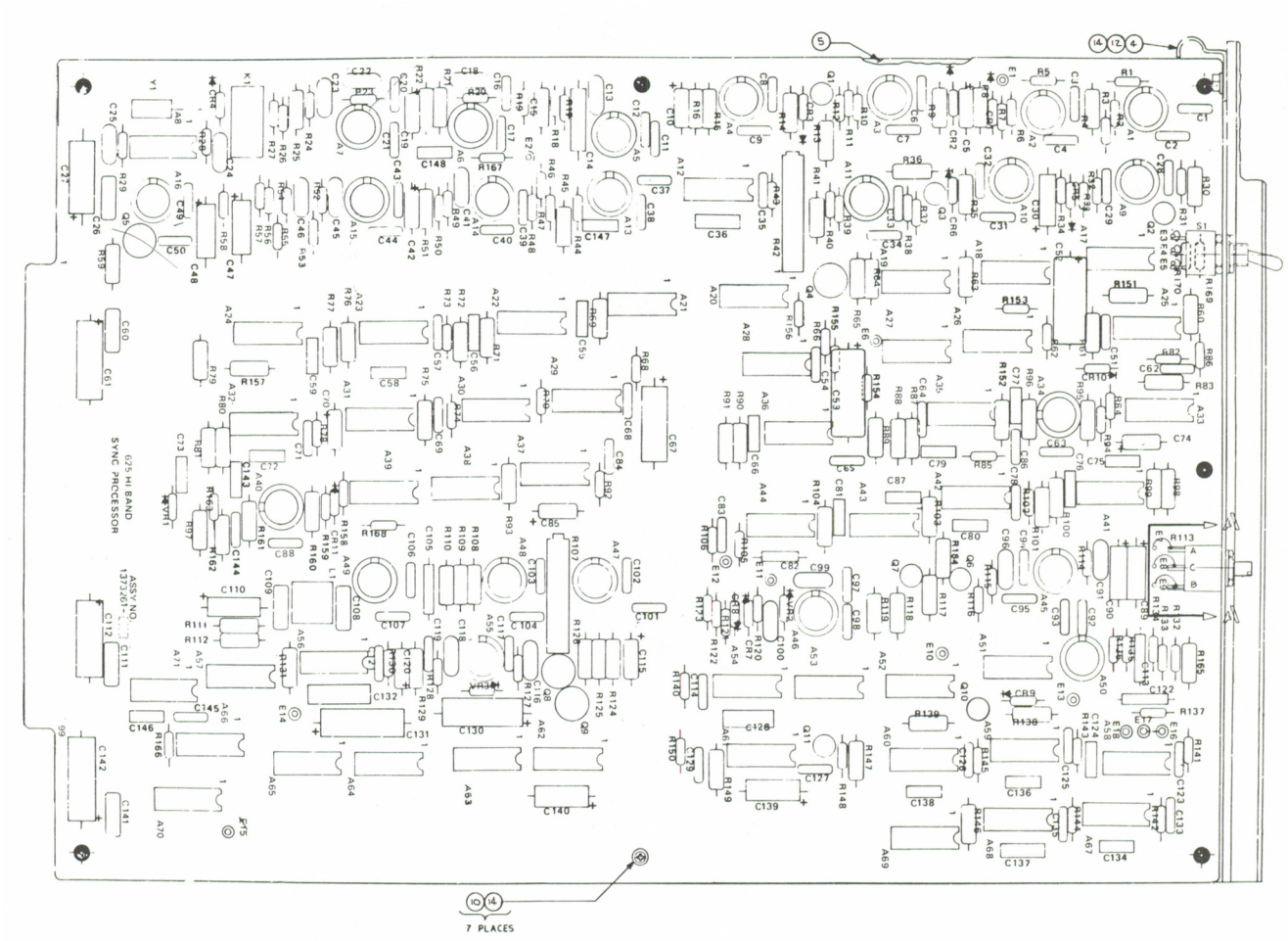

Assembly No. 1373261. Control Track and Sync Processor PWA, Module No. 3, PAL/SECAM, PAL-M

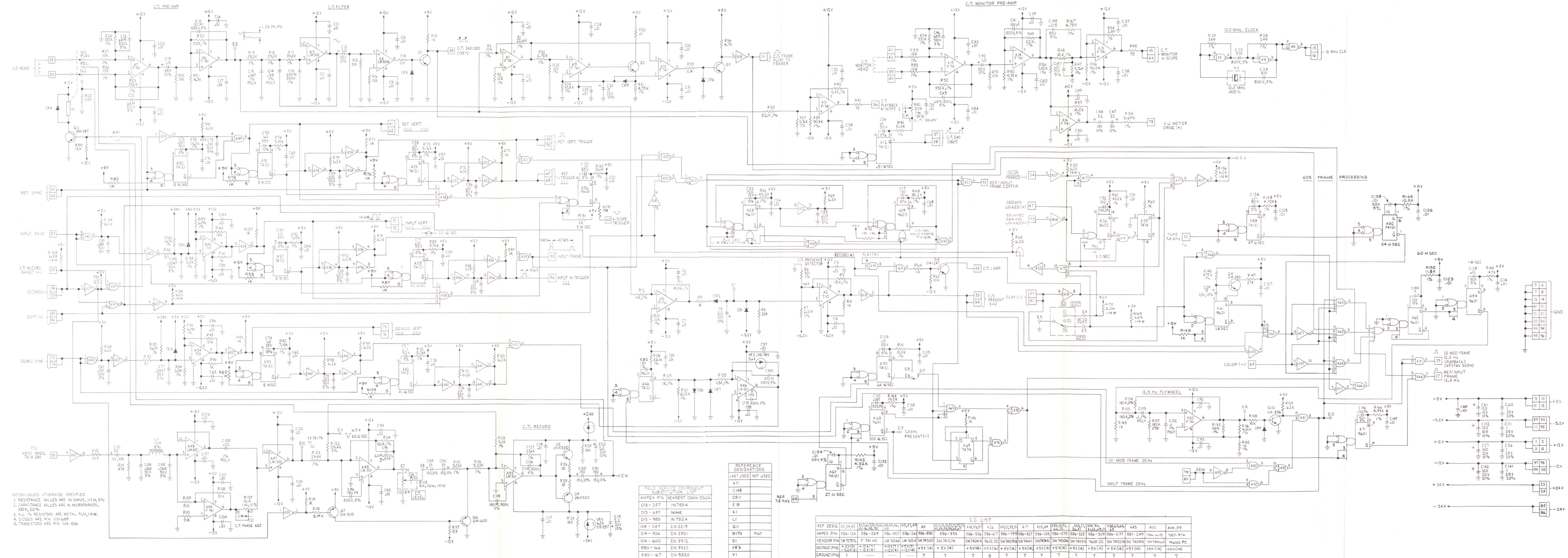

NOTES: UNLESS OTHERWISE SPECIFIED

1. RESISTANCE VALUES ARE IN OHMS, 1/2W, 5%
2. CAPACITANCE VALUES ARE IN MICROFARADS, 100V, 20%
3. ALL 1% RESISTORS ARE METAL FILM, 1/8W.
4. DIODES ARE P/N 013-689
5. TRANSISTORS ARE P/N 014-506

FIELD SERVICE COMPONENT SUBSTITUTION LIST

AMPEX P/N	NEAREST COMM. EQUIV.
013-257	IN753A
013-689	NONE
013-983	IN752A
014-247	2N2219
014-506	2N2501
014-600	2N3912
580-166	2N5322
580-167	2N5320
014-383	2N2484
014-505	2N3251

REFERENCE DESIGNATIONS

LAST USED	NOT USED
A71	
C148	
CR11	
E18	
K1	
L1	
Q11	
R171	R67
S1	
VR3	
Y1	

I.C. LIST

REF DESIG	AMPEX P/N	VENDOR P/N	VOLTAGE (PIN)	GROUND (PIN)
A2,34,40	586-124	SN72710L	+12V(8) −5.2V(4)	1
A1,3,6,7,9,10,11, 13-16,48,50	586-269	F 741 HC	+12V(7) −12V(4)	—
A4,45,46, 55	586-437	LM 301AH	+12V(7) −12V(4)	—
A5,47,49	586-261	LM 302H	+12V(7) −12V(4)	—
A8	586-830	SN74S00	+5V (14)	7
A12,23,31,32,33,35,37, 42,44,58,59,60,67	586-533	SN 74121N	+5V (14)	7
A18,53,57	586-326	SN7404N	+5V(14)	7
A26	586-617	9602 DC	+5V(16)	8
A19,21,39,51	586-759	SN7408N	+5V(14)	7
A17	586-327	SN74H11	+5V(14)	7
A25,69	586-108	SN7474N	+5V(14)	7
A20,30,52, 66,70	586-075	SN7400N	+5V(14)	7
A24,27, 36,41	586-325	SN7405N	+5V(14)	7
A54,56, 61,62,68,71	586-309	9601 DC	+5V(14)	7
A38,63,64, 65	586-077	SN7420N	+5V(14)	7
A43	587-249	SN7409N	+5V(14)	7
A22	586-613	SN7406J	+5V(14)	7
A28,29	587-416	9600 PC	+5V(14)	7

Schematic No. 1373263.
Control Track and Sync Processor PWA, PAL/SECAM, PAL-M, Module No. 3

AMPEX 1809178-02

ITEM NO.	AMPEX PART NO.	REFERENCE NUMBER	DESCRIPTION	JEDEC NO. OR MFR. PART NO.
	1373171-02		HEAD PHASE COMPARATOR PWA	
3	1373173		SCHEMATIC	
5	1373285-04		OVERLAY	
6	1373227-01		CONTACT, GND	
7	1373272-01		SHIELD, PWB	
8	1373273-01		HANDLE, MDL	
10	471-325		SCREW, FLAT HD, NO. 4-40 X 0.187 LG	
11	473-325		SCREW, ASSEM WASH, NO. 4-40 X 0.312 LG	
13	496-004		NUT, ASSEM WASH, NO. 4	
15	501-169		WASHER, PLAIN, NO. 4	
17	041-017	R1,29,102,109, 152,159	RESISTOR, COMP, 33K, 1/2W, 5%	
18	041-303	R2	RESISTOR, COMP, 3.9K, 1/2W, 5%	
19	041-455	R6,12,15,24,27, 40,47,53-56,64-67 87-92,107,114,130 131,132,136,137, 139,140,163-166, 171,175	RESISTOR, COMP, 6.2K, 1/2W, 5%	
20	041-245	R10,13,14,16,17, 19,20,63,69,71, 72,76,78,79,84, 86,94-96,98,100, 101,108,115,116, 122,123,127,128, 129,134,135,138, 141,143,154,161, 172,173,174,177	RESISTOR, COMP, 1.0K, 1/2W, 5%	
21	041-014	R30,34,43,44,61, 75,117,118,126, 133,144	RESISTOR, COMP, 10K, 1/2W, 5%	
22	041-239	R18,32,62,77,104, 111,142,153,160	RESISTOR, COMP, 2.2K, 1/2W, 5%	
23	041-013	R35,48,50,120	RESISTOR, COMP, 4.7K, 1/2W, 5%	
24	041-016	R36	RESISTOR, COMP, 22K, 1/2W, 5%	
25	041-004	R38,49	RESISTOR, COMP, 220 OHM, 1/2W, 5%	
26	041-025	R51	RESISTOR, COMP, 150K, 1/2W, 5%	
27	041-023	R97,121	RESISTOR, COMP, 100K, 1/2W, 5%	
28	041-604	R99,125	RESISTOR, COMP, 11K, 1/2W, 5%	
29	041-529	R103,110	RESISTOR, COMP, 20K, 1/2W, 5%	
30	041-331	R124	RESISTOR, COMP, 3.3K, 1/2W, 5%	
33	062-969	R3,106,113	RESISTOR, MF, 5.11K, 1/8W, 1%	
34	062-624	R4,170	RESISTOR, MF, 1K, 1/8W, 1%	
35	062-986	R33	RESISTOR, MF, 12.1K, 1/8W, 1%	
36	062-562	R9,70	RESISTOR, MF, 12.4K, 1/8W, 1%	
37	062-963	R21	RESISTOR, MF, 4.32K, 1/8W, 1%	
38	062-968	R22	RESISTOR, MF, 4.99K, 1/8W, 1%	
39	062-998	R23,68	RESISTOR, MF, 18.7K, 1/8W, 1%	
				J

ITEM NO.	AMPEX PART NO.	REFERENCE NUMBER	DESCRIPTION	JEDEC NO. OR MFR. PART NO.
40	062-693	R8,28,39,42,57	RESISTOR, MF, 20.0K, 1/8W, 1%	
41	062-977	R31	RESISTOR, MF, 7.5K, 1/8W, 1%	
42	062-997	R169	RESISTOR, MF, 18.2K, 1/8W, 1%	
43	062-989	R37	RESISTOR, MF, 14K, 1/8W, 1%	
44	066-001	R45	RESISTOR, MF, 22.6K, 1/8W, 1%	
45	062-983	R46,74,81,119, 147,149,150, 151,156,157,158	RESISTOR, MF, 10K, 1/8W, 1%	
46	066-513	R52	RESISTOR, MF, 8.66K, 1/8W, 1%	
47	066-519	R73	RESISTOR, MF, 392K, 1/8W, 1%	
48	062-932	R168	RESISTOR, MF, 1.5K, 1/8W, 1%	
49	062-992	R167	RESISTOR, MF, 15.4K, 1/8W, 1%	
50	066-008	R105,112	RESISTOR, MF, 28K, 1/8W, 1%	
51	062-796	R146	RESISTOR, MF, 1M, 1/8W, 1%	
52	062-798	R145	RESISTOR, MF, 56.2K, 1/8W, 1%	
53	066-032	R148	RESISTOR, MF, 442K, 1/8W, 1%	
54	062-990	R155,162	RESISTOR, MF, 14.3K, 1/8W, 1%	
55	062-928	R93	RESISTOR, MF, 1.1K, 1/8W, 1%	
56	066-014	R176	RESISTOR, MF, 47.5K, 1/8W, 1%	
57	066-181	R59,60	RESISTOR, MF, 28.7K, 1/8W, 1%	
58	044-198	R7	RESISTOR, VAR, 1K, 1W, 5%	
59	044-274	R5	RESISTOR, VAR, 10K, 1W, 5%	
60	066-163	R82,83	RESISTOR, MF, 9.31K, 1/8W, 1%	
61	066-597	R58	RESISTOR, MF, 1.43K, 1/8W, 1%	
62	034-545	C3,15,79	CAPACITOR, MICA, 5000 PF, 500V, 1%	
64	035-734	C5,6,22,28,32,35, 37,38,41,44,56, 57,80,83,84,85,60	CAPACITOR, MYLAR, 0.01 UF, 50V, 5%	
65	055-166	C14	CAPACITOR, MYLAR, 0.001 UF, 50V, 5%	
66	035-893	C48,51,81,82	CAPACITOR, MYLAR, 0.1 UF, 50V, 5%	
67	035-598	C29	CAPACITOR, MYLAR, 0.047 UF, 50V, 5%	
69	055-133	C7,8,33,40	CAPACITOR, MYLAR, 0.0022 UF, 50V, 5%	
70	055-168	C50,52	CAPACITOR, MYLAR, 0.0056 UF, 50V, 5%	
72	030-094	C1,10,75,78	CAPACITOR, MONO, 1 UF, 25V, 20%	
74	030-057	C11,12,13,16,20, 21,25,30,31,36, 42,43,47,49,54, 55,58,59,67,68, 70,71,73,74,87	CAPACITOR, CER, 0.01 UF, 100V, 20%	
76	055-810	C23	CAPACITOR, POLYCARB, 0.1 UF, 100V, 1%	
78	037-620	C2,77	CAPACITOR, TANT, 100 UF, 20V, 10%	
79	037-186	C9,76	CAPACITOR, TANT, 120 UF, 10V, 10%	
81	037-985	C4,24,39,53	CAPACITOR, TANT, 15 UF, 20V, 10%	
				J

ASSEMBLY NO. 1373171 TITLE HEAD PHASE COMPARATOR PWA, MODULE NO. 4

ITEM NO.	AMPEX PART NO.	REFERENCE NUMBER	DESCRIPTION	JEDEC NO. OR MFR. PART NO.
82	037-164	C17,34,45,46,69, 72	CAPACITOR, TANT, 1 UF' 35V, 10%	
83	037-238	C61,62	CAPACITOR, TANT, 2.2 UF, 35V, 10%	
84	037-170	C63,66	CAPACITOR, TANT, 5.6 UF, 35V, 10%	
85	037-991	C64,65,86	CAPACITOR, TANT, 22 UF, 15V, 10%	
86	037-109	C26,27	CAPACITOR, TANT, 10 UF, 20V, 10%	
89	014-247	Q1,14,18	TRANSISTOR	2N2219
90	014-505	Q5,6,12,13,17, 21,26,29,34,35	TRANSISTOR	2N3251
91	014-506	Q3,4,8,11,16,20, 22,23,28,31,33	TRANSISTOR	2N2501
92	014-631	Q2,9,15,19	TRANSISTOR, DUAL	2N3536
93	580-133	Q7,10,24,25,27, 30,32	TRANSISTOR	2N4093
96	586-075	A19,22,24,28,29, 33,47,54,67,68	INTEGRATED CIRCUIT	SN7400N
97	586-076	A46	INTEGRATED CIRCUIT	SN7410N
98	586-077	A50	INTEGRATED CIRCUIT	SN7420N
99	586-106	A40,45	INTEGRATED CIRCUIT	SN7451N
100	586-121	A51	INTEGRATED CIRCUIT	F711C
101	586-124	A26	INTEGRATED CIRCUIT	F710C
102	586-261	A8,16,56,57,59,62	INTEGRATED CIRCUIT	LM302
103	586-269	A23,25,32,41,58, 61	INTEGRATED CIRCUIT	F741C
104	586-325	A1,7,12,30,34, 48,49,52,53,64	INTEGRATED CIRCUIT	SN7405N
105	586-309	A2,18,31,42,55, 66	INTEGRATED CIRCUIT	F9601
106	586-326	A15,37	INTEGRATED CIRCUIT	SN7404N
107	586-533	A3,9,10,11,17,27, 35,36,60,63,65	INTEGRATED CIRCUIT	SN74121N
108	586-647	A4,44	INTEGRATED CIRCUIT	SN74107N
109	586-797	A43	INTEGRATED CIRCUIT	SN74123N
110	586-799	A39	INTEGRATED CIRCUIT	SN74192N
111	586-800	A5,6,13,14,20,21	INTEGRATED CIRCUIT	SN74193N
112	587-051	A38	INTEGRATED CIRCUIT	SN7425N
115	143-891	J1-4(A,B,C)	JACK, PC, CLOSED ENTRY	
116	602-012		PLUG, SHORTING, REF: J1-4	
118	280-130		SPACER, XSTR, T0-18, REF: Q1,3-8,10-13,16,17,20-35	
119	280-998		SPACER, XSTR, T0-5	
				J

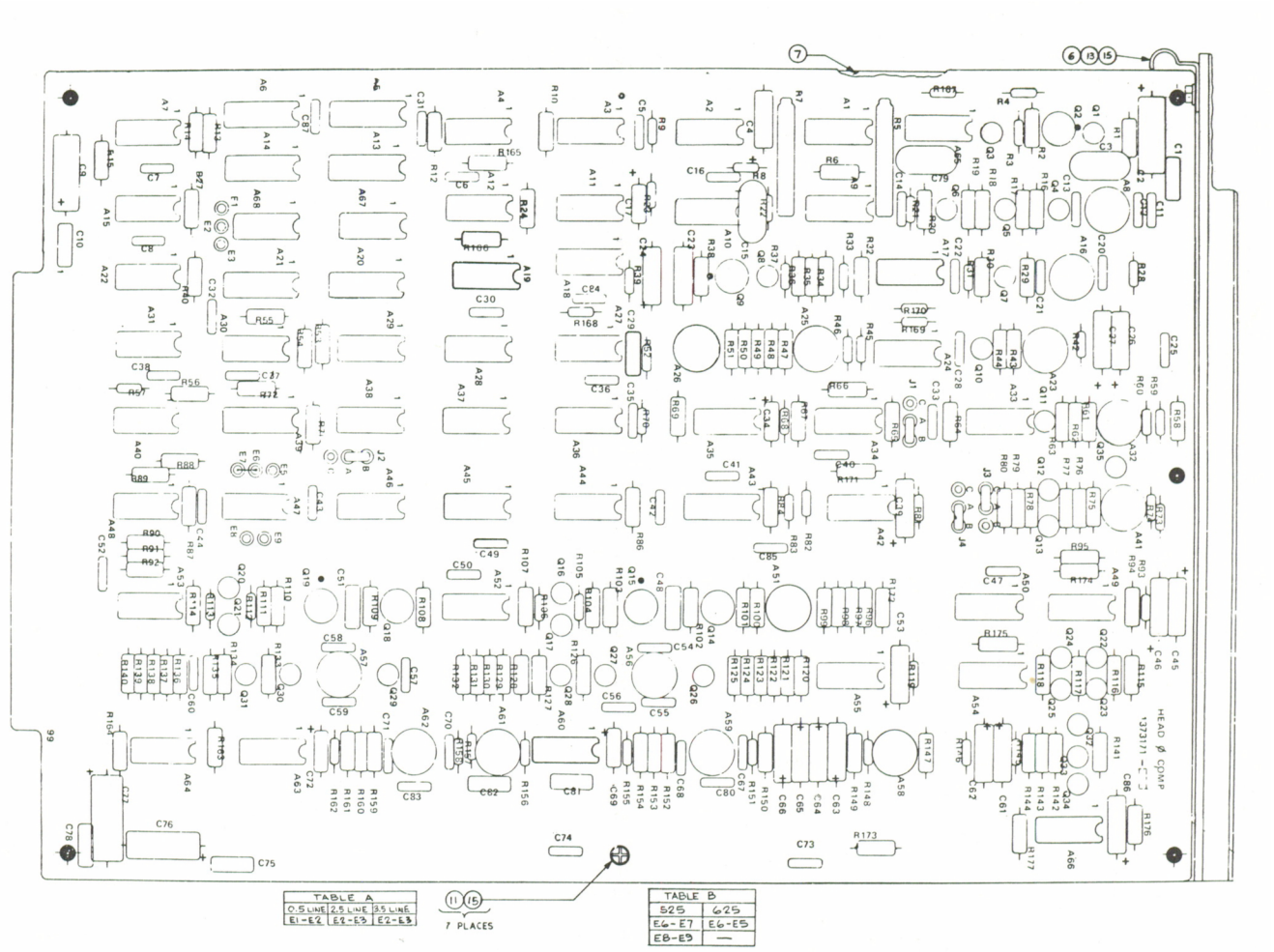

Assembly No. 1373171. Head Phase Comparator PWA, Module No. 4

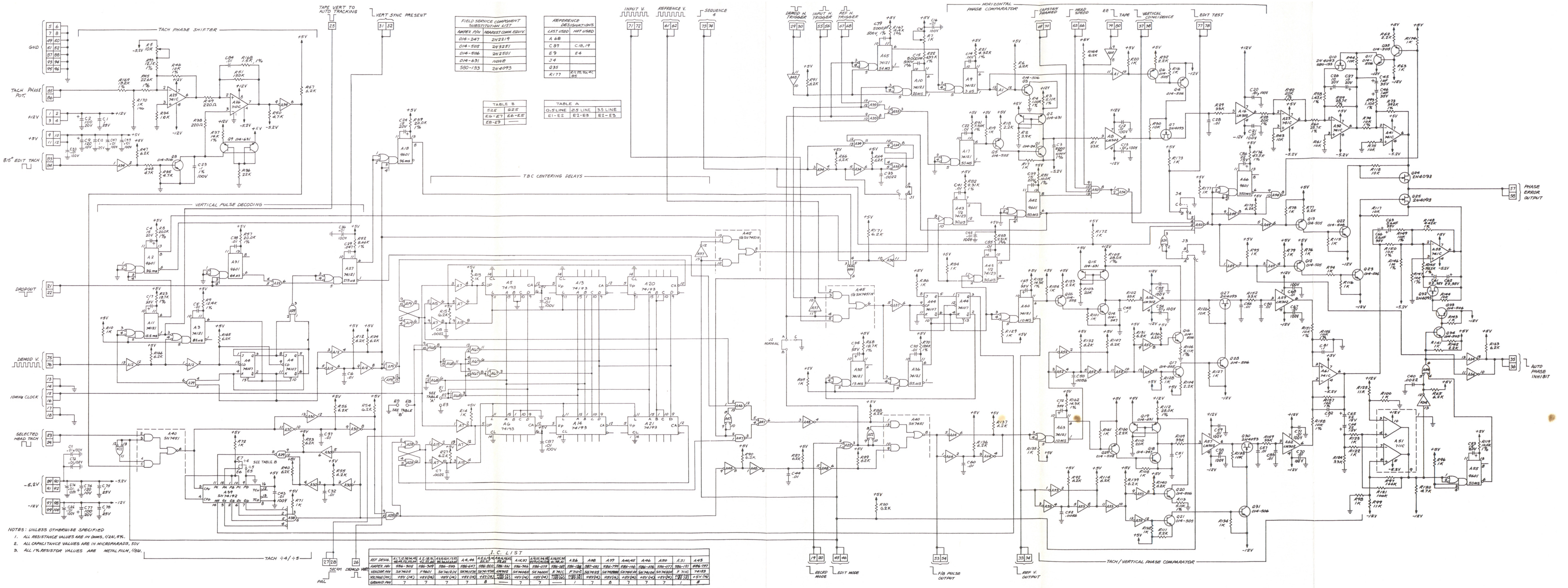

FIELD SERVICE COMPONENT SUBSTITUTION LIST	
AMPEX P/N	NEAREST COMM. EQUIV.
014-247	2N2219
014-505	2N3251
014-506	2N2501
014-631	NONE
580-133	2N4093

REFERENCE DESIGNATIONS	
LAST USED	NOT USED
A 68	
C 87	C18, 19
E 9	E 4
J 4	
Q 35	
R177	R11, 25, 26, 41, 85

TABLE B	
525	625
E6-E7	E6-E5
E8-E9	—

TABLE A		
0.5 LINE	2.5 LINE	3.5 LINE
E1-E2	E2-E3	E2-E3

I. C. LIST

REF DESIG.	AMPEX P/N	VENDOR P/N	VOLTAGE (PIN)	GROUND PIN
A1, 7, 12, 30, 34, 43, 48, 49, 52, 53, 64	586-305	SN7405	+5V (14)	7
A2, 18, 31, 42, 55, 66	586-309	F9601	+5V (14)	7
A3, 9, 10, 11, 17, 27, 35, 36, 60, 63, 65	586-533	SN74121N	+5V (14)	7
A4, 44	586-647	SN74107N	+5V (14)	7
A5, 6, 13, 14, 20, 21	586-800	SN74193N	+5V (16)	8
A8, 16, 56, 57, 59, 62	586-261	LM302	+12V (7) -12V (4)	—
A15, 37	586-326	SN7404N	+5V (14)	7
A19, 22, 24, 28, 29, 33, 47, 54, 67, 68	586-075	SN7400N	+5V (14)	7
A23, 25, 32, 41, 58, 61	586-269	F741C	+12V (7) -12V (4)	—
A26	586-128	F710C	+12V (8) -5V (4)	1
A38	587-051	SN7425	+5V (14)	7
A39	586-799	SN74192N	+5V (16)	8
A40, 45	586-106	SN7451N	+5V (14)	7
A46	586-076	SN7410N	+5V (14)	7
A50	586-077	SN7420N	+5V (14)	7
A51	586-121	F711C	+12V (10) -6V (5)	1
A43	586-797	74123	+5V (16)	8

NOTES: UNLESS OTHERWISE SPECIFIED
1. ALL RESISTANCE VALUES ARE IN OHMS, 1/2W, 5%.
2. ALL CAPACITANCE VALUES ARE IN MICROFARADS, 50V
3. ALL 1% RESISTOR VALUES ARE METAL FILM, 1/8W.

Schematic No. 1373173.
Head Phase Comparator PWA,
Module No. 4

F

ITEM NO.	AMPEX PART NO.	REFERENCE NUMBER	DESCRIPTION	JEDEC NO. OR MFR. PART NO.
	1373016-06		HEAD DRIVER PWA	
4	1373273-01		HANDLE, MDL	
5	1373272-01		SHIELD, PWB	
6	1373285-05		OVERLAY	
7	1373227-01		CONTACT, GND	
8	103307-02		STAND-OFF, CMPNT, 1/8"	
11	013-689	CR1-4,7-21	DIODE	FD600
12	1373461		SCHEMATIC	
13	014-247	Q3,5,8,13,21	TRANSISTOR	2N2219
14	014-364	Q9,14,22	TRANSISTOR	2N2905A
15	014-505	Q1,18	TRANSISTOR	2N3251
16	014-506	Q2,4,7,12,19,20	TRANSISTOR	2N2501
17	014-631	Q6	TRANSISTOR	2N3536
18	580-133	Q17	TRANSISTOR	2N4093
19	580-166	Q10,15,23	TRANSISTOR	2N5322
20	580-167	Q11,16,24	TRANSISTOR	2N5320
21	030-057	C4,5,11-15,18,20, 34-36,38,40,41, 43,44,49,53,58, 60,61,63	CAPACITOR, CER, 0.01 UF, 100V, 20%	
24	030-963	C23,24	CAPACITOR, CER, 0.1 UF, 100V, 10%	
25	030-094	C6,9,39,50	CAPACITOR, CERAMIC, 1.0 UF, 25V, 20%	
26	056-203	C57	CAPACITOR, MICA, 510 PF, 500V, 1%	
27	034-177	C16	CAPACITOR, MICA, 100 PF, 500V, 5%	
28	034-326	C25,31	CAPACITOR, MICA, 750 PF, 500V, 5%	
29	034-958	C27	CAPACITOR, MICA, 2200 PF, 500V, 5%	
30	035-828	C56	CAPACITOR, MYLAR, 0.022 UF, 50V, 5%	
33	035-814	C28	CAPACITOR, MYLAR, 0.033 UF, 50V, 5%	
34	035-893	C42	CAPACITOR, MYLAR, 0.1 UF, 50V, 5%	
35	055-131	C47	CAPACITOR, MYLAR, 0.039 UF, 50V, 5%	
36	055-166	C22	CAPACITOR, MYLAR, 0.001 UF, 50V, 5%	
37	055-808	C45,46	CAPACITOR, POLY, 0.22 UF, 100V, 1%	
39	037-164	C55	CAPACITOR, TANT, 1 UF, 35V, 10%	
41	037-749	C19	CAPACITOR, TANT, 68 UF, 15V, 10%	
42	037-620	C8,52	CAPACITOR, TANT, 100 UF, 20V, 10%	
44	037-985	C1,29,33,37,48, 54,62	CAPACITOR, TANT, 15 UF, 20V, 10%	
45	037-186	C7,21,32,51,64	CAPACITOR, TANT, 120 UF, 10V, 10%	
47	044-299	R1	RESISTOR, VAR, 5K, WW	
49	041-283	R174-179	RESISTOR, COMP, 47 OHM, 1/2W, 5%	

M

ASSEMBLY NO. 1373016 TITLE HEAD DRIVER PWA, MODULE NO. 5

ITEM NO.	AMPEX PART NO.	REFERENCE NUMBER	DESCRIPTION	JEDEC NO. OR MFR. PART NO.
51	041-002	R102,103,132, 133,161,162	RESISTOR, COMP, 10 OHM, 1/2W, 5%	
52	041-003	R52,28,105,135, 167	RESISTOR, COMP, 100 OHM, 1/2W, 5%	
53	041-004	R76,113	RESISTOR, COMP, 220 OHM, 1/2W, 5%	
54	041-010	R55,97,98,127, 128,156,157	RESISTOR, COMP, 2K, 1/2W, 5%	
55	041-013	R49,99,117,129, 158	RESISTOR, COMP, 4.7K, 1/2W, 5%	
57	041-489	R53	RESISTOR, COMP, 33 OHM, 1/2W, 5%	
58	041-020	R73	RESISTOR, COMP, 47K, 1/2W, 5%	
59	041-022	R50	RESISTOR, COMP, 68K, 1/2W, 5%	
60	041-026	R88,118,147	RESISTOR, COMP, 180K, 1/2W, 5%	
61	041-239	R13,12,72,109, 111,143,168	RESISTOR, COMP, 2.2K, 1/2W, 5%	
63	041-322	R93,94,123,124, 152,153	RESISTOR, COMP, 18K, 1/2W, 5%	
64	041-398	R89,119,148	RESISTOR, COMP, 2.2M, 1/2W, 5%	
65	041-330	R77	RESISTOR, COMP, 6.8K, 1/2W, 5%	
66	041-455	R5-8,11,14,16,17, 21,22,33,34,48, 69,84-87,144	RESISTOR, COMP, 6.2K, 1/2W, 5%	
67	041-516	R61	RESISTOR, COMP, 75 OHM, 1/2W, 5%	
68	041-548	R75	RESISTOR, COMP, 130 OHM, 1/2W, 5%	
70	041-017	R137,145	RESISTOR, COMP, 33K, 1/2W, 5%	
71	041-014	R45,51,90,91,95, 96,100,108,116, 120,121,125,126, 130,138,149,150, 154,155,159	RESISTOR, COMP, 10K, 1/2W, 5%	
72	043-642	R106,136,165	RESISTOR, WW, 10 OHM, 3W	
73	043-299	R107,164,166	RESISTOR, WW, 20 OHM, 3W	
74	041-331	R46	RESISTOR, COMP, 3.3K, 1/2W, 5%	
75	041-522	R112	RESISTOR, COMP, 910 OHM, 1/2W, 5%	
76	041-025	R170	RESISTOR, COMP, 150K, 1/2W, 5%	
77	041-528	R110	RESISTOR, COMP, 300 OHM, 1/2W, 5%	
78	041-245	R2,4,9,10,15, 18-20,23-25,35, 40,63,65,66,70, 71,74,92,122, 141,142,151,172	RESISTOR, COMP, 1K, 1/2W, 5%	
80	035-817	C59	CAPACITOR, MYLAR, 0.015 UF, 50V, 5%	
81	035-730	C2,3,17,26,30	CAPACITOR, MYLAR, 0.0047 UF, 50V, 5%	
83	062-601	R39,43	RESISTOR, MF, 100K, 1/8W, 1%	
84	062-694	R26,27,36,41,81, 82	RESISTOR, MF, 15K, 1/8W, 1%	
85	062-693	R3,56	RESISTOR, MF, 20K, 1/8W, 1%	
				M

ASSEMBLY NO. 1373016 TITLE HEAD DRIVER PWA, MODULE NO. 5

ITEM NO.	AMPEX PART NO.	REFERENCE NUMBER	DESCRIPTION	JEDEC NO. OR MFR. PART NO.
86	062-907	R60	RESISTOR, MF, 576 OHM, 1/8W, 1%	
87	062-932	R38,44	RESISTOR, MF, 1.5K, 1/8W, 1%	
88	062-944	R67	RESISTOR, MF, 2.37K, 1/8W, 1%	
90	062-976	R146	RESISTOR, MF, 7.15K, 1/8W, 1%	
91	062-980	R58	RESISTOR, MF, 8.06K, 1/8W, 1%	
92	062-983	R37,42,101,115, 131,160	RESISTOR, MF, 10K, 1/8W, 1%	
93	062-986	R59	RESISTOR, MF, 12.1K, 1/8W, 1%	
94	062-987	R62	RESISTOR, MF, 13.3K, 1/8W, 1%	
95	062-989	R104,134,163	RESISTOR, MF, 14K, 1/8W, 1%	
96	062-995	R32	RESISTOR, MF, 16.5K, 1/8W, 1%	
97	062-600	R140	RESISTOR, MF, 11K, 1/8W, 1%	
98	066-004	R31,114	RESISTOR, MF, 24,3K, 1/8W, 1%	
99	066-009	R83	RESISTOR, MF, 33.2K, 1/8W, 1%	
100	066-061	R139	RESISTOR, MF, 13K, 1/8W, 1%	
101	066-454	R57	RESISTOR, MF, 1.91K, 1/8W, 1%	
102	066-656	R64	RESISTOR, MF, 30.1K, 1/8W, 1%	
103	062-965	R169	RESISTOR, MF, 4.64K, 1/8W, 1%	
104	586-124	A37	INTEGRATED CIRCUIT	710
106	586-076	A33,21	INTEGRATED CIRCUIT	7410
107	586-077	A51,73	INTEGRATED CIRCUIT	7420
108	586-078	A12,24	INTEGRATED CIRCUIT	7430
109	586-106	A45,46	INTEGRATED CIRCUIT	7451
110	586-121	A56	INTEGRATED CIRCUIT	711
111	586-163	A29	INTEGRATED CIRCUIT	7454
112	586-261	A62,64	INTEGRATED CIRCUIT	LM 302
113	586-269	A38,39,47,48,53, 55,57,59,61,68,70	INTEGRATED CIRCUIT	741
114	586-282	A36	INTEGRATED CIRCUIT	MC1439G
116	586-325	A3,18,25,35,49,66,	INTEGRATED CIRCUIT	7405
117	586-326	A8,13,19,27,34, 44,50	INTEGRATED CIRCUIT	7404
118	586-327	A6,7	INTEGRATED CIRCUIT	74H11
119	586-437	A52,54,58,60,67, 69	INTEGRATED CIRCUIT	LM 301
120	586-445	A10	INTEGRATED CIRCUIT	7475
121	586-492	A4	INTEGRATED CIRCUIT	7496
122	586-497	A30	INTEGRATED CIRCUIT	7495
123	586-533	A41,63,65,72	INTEGRATED CIRCUIT	74121
124	586-647	A1,28,40	INTEGRATED CIRCUIT	74107
125	586-309	A2,42,75	INTEGRATED CIRCUIT	9601
126	586-075	A20,74	INTEGRATED CIRCUIT	7490
128	586-759	A9	INTEGRATED CIRCUIT	7408
129	586-797	A43	INTEGRATED CIRCUIT	74123
				M

ASSEMBLY NO. 1373016 TITLE HEAD DRIVER PWA, MODULE NO. 5

ITEM NO.	AMPEX PART NO.	REFERENCE NUMBER	DESCRIPTION	JEDEC NO. OR MFR. PART NO.
130	586-799	A14-17	INTEGRATED CIRCUIT	74192
131	586-800	A22,23	INTEGRATED CIRCUIT	74193
132	586-910	A31,32	INTEGRATED CIRCUIT	7437
133	587-051	A5	INTEGRATED CIRCUIT	7425
134	587-157	A11	INTEGRATED CIRCUIT	DAC-01-HS
135	586-917	A26	INTEGRATED CIRCUIT	7427
136	586-423	A71	INTEGRATED CIRCUIT	SN7442N
137	586-671		PAD, MTG, IC, REF: A11	
140	143-981		JACK	
141	602-012		PLUG, SHORTING	
142	250-188		BUMPER, ADH BACK	
145	062-969	R54,68	RESISTOR, MF, 5.11K, 1/8W, 1%	
146	066-802	R78	RESISTOR, MF, 9.76K, 1/8W, 1%	
147	062-800	R79	RESISTOR, MF, 21.5K, 1/8W, 1%	
148	066-009	R80	RESISTOR, MF, 33.2K, 1/8W, 1%	
152	051-647	L1	INDUCTOR, FXD, 5.6 MH	
154	473-325		SCREW, ASSEM, NO. 4-40 X 0.312 LG	
155	496-004		NUT, ASSY, NO. 4-40	
156	501-169		WASHER, PLAIN, NO. 4	
157	471-325		SCREW, FH, NO. 4-40 X 0.188 LG	
159	280-130		PAD, MTG, XSTR, REF: Q1,2,4,7,12,17-20	
160	280-998		PAD, MTG, XSTR, REF: Q3,5,8-11,13-16,21-24	
164	066-011	R173	RESISTOR, MF, 39.2K, 1/8W, 1%	
166	062-950	R171	RESISTOR, MF, 2.74K, 1/8W, 1%	

M

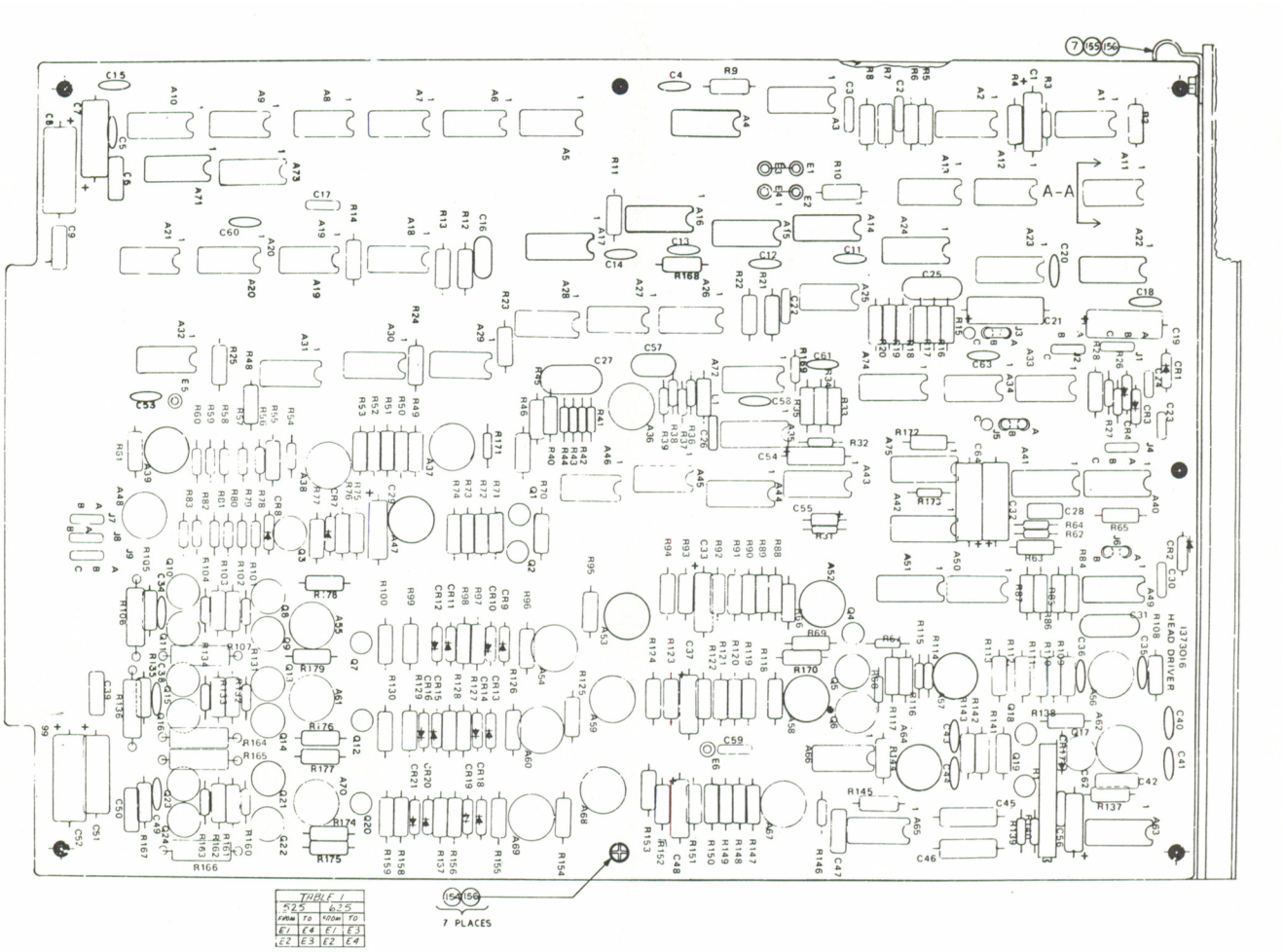

Assembly No. 1373016. Head Driver PWA, Module No. 5

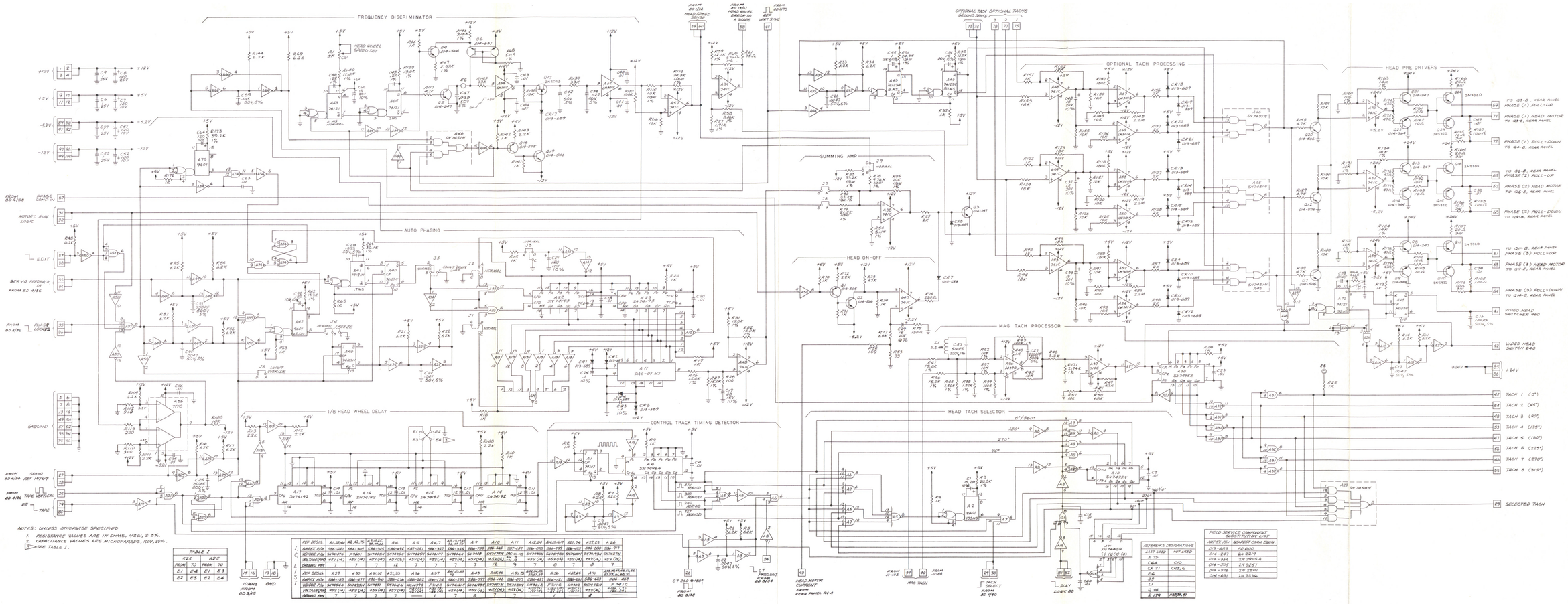

REF DESIG.	A1,28,40	A2,47,76	A3,4,29, 30,39,46	A6	A5	A6,7	A8,13,19, 34,45,50	A9	A10	A11	A12,24	A44,45,47	A30,74	A32,63	A38
1	AMPEX P/N	150-067	056-328	056-325	056-492	057-081	056-327	056-326	056-799	056-560	057-127	056-078	056-799	056-005	056-507
2	VENDOR P/N	SN74LS74	P7861	SN74S08	SN74S64	SN74S00	SN74S03	SN74S10	SN 9608	SN74S74	DAC-01-HS	SN74S00	SN74S02	SN74S04	SN74S74
3	VOLTAGE/PIN	+5V (14)	+5V (14)	+5V (14)	+5V (14)	+5V (5)	+5V (14)	+5V (14)	+5V (14)	+5V (14)	+5V, -5.2V, -12V	+5V (14)	+5V (14)	+5V (14)	+5V (14)
4	ORDERED PER	7	7	7	7	12	7	7	18	9	7	8	7	8	7
5	REF DESIG.	A9	A10	A11,31	A21,35	A36	A37	A41,51,60	A43	A48,66	A52,62	A58,59, 61,64,65	A68	A42,69	A70	LINE MATCH, CLOCK DISTR., BLOCK, 10
6	AMPEX P/N	056-435	056-877	056-960	056-036	056-582	004-124	056-555	056-797	056-398	056-077	056-687	056-141	056-064	056-503	056-687
7	VENDOR P/N	SN74S64	SN74S51	SN74S1	SN74LS04	MC4093B	F7404	SN74LS11	SN74S38	SN74S133	SN74S240	LM361A	P7N1C	LM392	SN74S124	F 7410
8	VOLTAGE/PIN	+5V (14)	+5V (14)	+5V (14)	+5V (14)	+5V (14)	+5V (14)	+5V (14)	+5V (14)	+5V (20)	+5V (14)	+5V (7)	+5V (7)	SUBST. SUBST.	+5V (16)	+5V (14)
9	ORDERED PER	7	7	7	7	7	7	7	8	1	7	1	1	8	1	7

REF DESIG.	A13	A14	A15	A16	A17	A18	A20	A22	A23	A25	A26	A27	A33	A53	A54	A55	A56	A57	A67
AMPEX P/N	056-799	056-560	056-799	056-560	056-799	056-560	056-799	056-560	056-799	056-560	056-799	056-560	056-799	056-560	056-799	056-560	056-799	056-560	056-799
VENDOR P/N	SN74S74	SN74S00	SN74S74	SN74S00	SN74S74	SN74S00	SN74S74	SN74S00	SN74S74	SN74S00	SN74S74	SN74S00	SN74S74	SN74S00	SN74S74	SN74S00	SN74S74	SN74S00	SN74S74
VOLTAGE/PIN	+5V (14)	+5V (14)	+5V (14)	+5V (14)	+5V (14)	+5V (14)	+5V (14)	+5V (14)	+5V (14)	+5V (14)	+5V (14)	+5V (14)	+5V (14)	+5V (14)	+5V (14)	+5V (14)	+5V (14)	+5V (14)	+5V (14)
ORDERED PER	7	7	7	7	7	7	7	7	7	7	7	7	7	7	7	7	7	7	7

ITEM NO.	AMPEX PART NO.	REFERENCE NUMBER	DESCRIPTION	JEDEC NO. OR MFR. PART NO.
	1373269-05		CONTROL LOGIC PWA	
2	1373427		SCHEMATIC	
4	1373285-06		OVERLAY	
5	1373227-01		CONTACT, GND	
6	1373272-01		SHIELD, PWB	
7	1373273-01		HANDLE, MDL	
9	471-325		SCREW, FLAT HD, NO. 4-40 X 0.187 LG	
10	473-325		SCREW, PAN HD, SEM, NO. 4-40 X 0.312 LG	
11	250-188		BUMPER, PAD, BK RBR, ADH BACK	
12	496-004		NUT, ASSEM WASH, NO. 4	
14	501-169		WASHER, SM, NO. 4	
16	013-829	VR1	DIODE, ZENER	1N5288B
18	013-678	CR26,28,29,31, 33,35,37,39,41, 43,45,47,49,50, 52,60	DIODE	1N4385
21	014-362		HEATSINK, XSTR, REF: Q13,15	
23	014-248	Q1,2,12,14	TRANSISTOR	2N2222
24	580-167	Q13,15	TRANSISTOR	2N5320
25	014-247	Q3-11,16,17,18	TRANSISTOR	2N2219
26	067-013	C5	CAPACITOR, NON POLARIZED, 20 UF, 15V, 20%	
29	030-057	C26,27,31-37,39	CAPACITOR, CER, 0.01 UF, 100V, 20%	
30	035-734	C3	CAPACITOR, MYLAR, 0.01 UF, 50V, 5%	
31	030-094	C1,2,4,7-21,38	CAPACITOR, MONO, 1 UF, 25V, 10%	
36	602-012		JUMPER, PLUG, REF: J1,2	
37	143-981	J1-A,B,C J2-A,B,C	JUMPER, CLOSED ENTRY	
39	037-749	C25,28	CAPACITOR, TANT, 68 UF, 15V	
40	037-186	C22	CAPACITOR, TANT, 120 UF, 10V	
41	037-746	C23,30	CAPACITOR, TANT, 47 UF, 20V	
42	037-303	C29	CAPACITOR, TANT, 330 UF, 6V	
43	037-985	C6	CAPACITOR, TANT, 15 UF, 20V	
44	037-991	C24	CAPACITOR, TANT, 22 UF, 15V	
45	041-404	R16,61,64-66, 70-78,81,90, 92-95	RESISTOR, COMP, 510 OHM' 1/2W, 5%	
47	041-019	R18	RESISTOR, COMP, 43K, 1/2W, 5%	
48	041-498	R59	RESISTOR, COMP, 24K, 1/2W, 5%	
49	041-535	R3	RESISTOR, COMP, 30K, 1/2W, 5%	
50	041-004	R12	RESISTOR, COMP, 220 OHM, 1/2W, 5%	
51	041-008	R20,30	RESISTOR, COMP, 1.5K, 1/2W, 5%	
52	041-013	R27	RESISTOR, COMP, 4.7K, 1/2W, 5%	
53	041-016	R68	RESISTOR, COMP, 22K, 1/2W, 5%	
54	041-017	R26,69	RESISTOR, COMP, 33K, 1/2W, 5%	
55	041-239	R63,80	RESISTOR, COMP, 2.2K, 1/2W, 5%	
56	041-245	R15,82	RESISTOR, COMP, 1K, 1/2W, 5%	
57	041-246	R17,28	RESISTOR, COMP, 82K, 1/2W, 5%	G

ASSEMBLY NO. 1373269 TITLE CONTROL LOGIC PWA, MODULE NO. 6

ITEM NO.	AMPEX PART NO.	REFERENCE NUMBER	DESCRIPTION	JEDEC NO. OR MFR. PART NO.
58	041-278	R1,2,11,31-58	RESISTOR, COMP, 2.7K, 1/2W, 5%	
59	041-316	R19,29	RESISTOR, COMP, 2.4K, 1/2W, 5%	
60	041-322	R6,8	RESISTOR, COMP, 18K, 1/2W, 5%	
61	041-357	R10	RESISTOR, COMP, 5.6K, 1/2W, 5%	
62	041-361	R21	RESISTOR, COMP, 7.5K, 1/2W, 5%	
64	041-420	R22-25,83-89	RESISTOR, COMP, 12K, 1/2W, 5%	
65	041-454	R60,67	RESISTOR, COMP, 39 OHM, 1/2W, 5%	
66	041-460	R9	RESISTOR, COMP, 56K, 1/2W, 5%	
67	041-516	R14	RESISTOR, COMP, 75 OHM, 1/2W, 5%	
68	041-525	R7	RESISTOR, COMP, 3.6K, 1/2W, 5%	
69	041-528	R4,5,91	RESISTOR, COMP, 300 OHM, 1/2W, 5%	
70	041-534	R13	RESISTOR, COMP, 62 OHM, 1/2W, 5%	
71	049-362	R62	RESISTOR, COMP, 3 OHM, 1/2W, 5%	
72	049-645	R79	RESISTOR, COMP, 6.2 OHM, 1/2W, 5%	
73	586-075	A6-8,16,20,22,24, 27,29,32	INTEGRATED CIRCUIT	SU7400N
74	586-076	A12,17,18,23,26	INTEGRATED CIRCUIT	SN7410N
75	586-077	A9,13	INTEGRATED CIRCUIT	SN7420N
76	586-078	A19,21	INTEGRATED CIRCUIT	SN7430N
77	586-109	A34	INTEGRATED CIRCUIT	SN7402N
78	586-124	A3,4	INTEGRATED CIRCUIT	UA710HC
79	586-269	A1	INTEGRATED CIRCUIT	UA741HC
80	586-326	A10,11,15,31,33	INTEGRATED CIRCUIT	SN7404N
82	586-335	A2	INTEGRATED CIRCUIT	LM306H
84	586-759	A14	INTEGRATED CIRCUIT	SN7408N
85	586-797	A5,28	INTEGRATED CIRCUIT	SN74123N
88	280-130		PAD, MTG, XSTR, REF: Q1,2,12,14	
90	280-998		PAD, MTG, XSTR, REF: Q3-11,13,15-18	
91	586-327	A25,30,35	INTEGRATED CIRCUIT	SN74H11N
95	013-689	CR1-25,27,30,32, 34,36,38,40,42, 44,46,48,51,53-59	DIODE	FD600

G

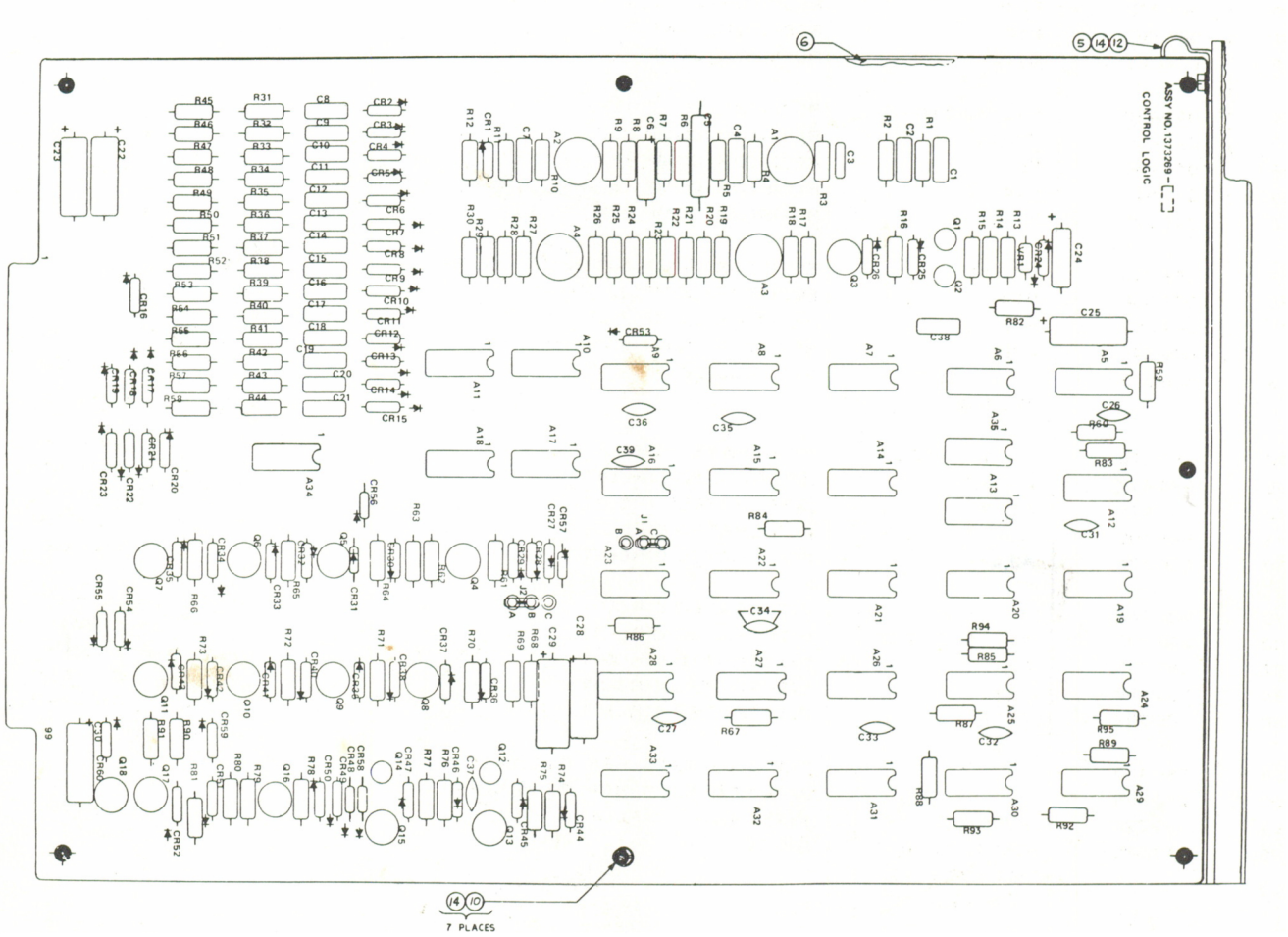

Assembly No. 1373269. Control Logic PWA, Module No. 6

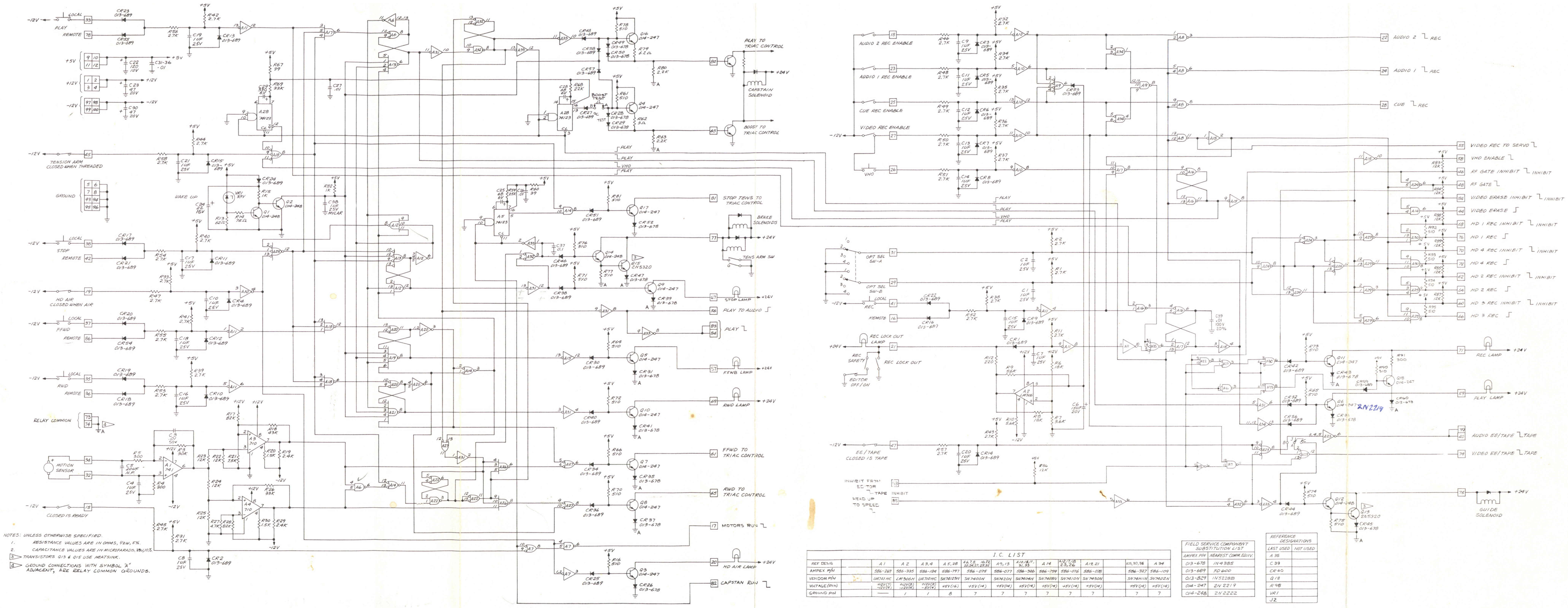

NOTES: UNLESS OTHERWISE SPECIFIED.

1. RESISTANCE VALUES ARE IN OHMS, 1/2W, 5%.
2. CAPACITANCE VALUES ARE IN MICROFARADS, 25V, 10%.
3. TRANSISTORS Q13 & Q15 USE HEATSINK.
4. GROUND CONNECTIONS WITH SYMBOL "A" ADJACENT, ARE RELAY COMMON GROUNDS.

I.C. LIST

REF DESIG		A1	A2	A3,4	A5,28	A6,7,8, 16,22, 20,24,27,29,32	A9,13	A10,15,11, 31,33	A14	A12,17,18 23,26	A19,21		A25,30,35	A34
AMPEX P/N		586-269	586-335	586-124	586-797	586-075	586-077	586-326	586-759	586-076	586-078		586-327	586-109
VENDOR P/N		UA741HC	LM306H	UA710HC	SN74123N	SN7400N	SN7420N	SN7404N	SN7408N	SN7410N	SN7430N		SN74H11N	SN7402N
VOLTAGE (PIN)		+12V(7) -12V(4)	+12V(8) -12V(4)	+12V(8) -5V(4)	+5V(16)	+5V(14)	+5V(14)	+5V(14)	+5V(14)	+5V(14)	+5V(14)		+5V(14)	+5V(14)
GROUND PIN		—	1	1	8	7	7	7	7	7	7		7	7

FIELD SERVICE COMPONENT SUBSTITUTION LIST

AMPEX P/N	NEAREST COMM. EQUIV.
013-678	IN4385
013-689	FD600
013-829	IN5228B
014-247	2N2219
014-248	2N2222

REFERENCE DESIGNATIONS

LAST USED	NOT USED
A35	
C39	
CR60	
Q18	
R95	
VR1	
J2	

D

Schematic No. 1373427.
Control Logic PWA, Module No. 6

ITEM NO.	AMPEX PART NO.	REFERENCE NUMBER	DESCRIPTION	JEDEC NO. OR MFR. PART NO.
	1373127-03		EDITOR PWA, NTSC/PAL-M	
3	1373129		SCHEMATIC	
4	1373285-07		OVERLAY	
5	1373227-01		CONTACT, GND	
6	1373272-01		SHIELD, PWB	
7	1373273-13		HANDLE, MODULE	
9	471-325		SCREW, FLAT HD, NO. 4-40 X 3/16	
10	473-325		SCREW, MACH, ASSY, NO. 4X 0.312 LG	
12	496-004		NUT, ASSEM, NO. 4	
14	501-169		WASHER, PLAIN, NO. 4	
16	013-650	CR1,33-36	DIODE	1N270
18	013-599	CR2,3,5-32	DIODE	1N914
20	014-248	Q1-9	TRANSISTOR	2N2222
22	250-188		BUMPER, PAD	
24	030-057	C1,3,4,6,8-11, 13,17,18,24,33, 34,36,40,47,49, 53,55	CAPACITOR, CER, 0.01 UF, 20%	
25	064-368	C19	CAPACITOR, CER, 0.56 UF, ±10%	
26	035-734	C5,14,35,44,50	CAPACITOR, MYLAR, 0.01 UF, 5%	
27	035-817	C22,27	CAPACITOR, MYLAR, 0.015 UF, 5%	
28	055-131	C25,26	CAPACITOR, MYLAR, 0.039 UF, 5%	
30	034-180	C56	CAPACITOR, MICA, 39 PF, ±5%	
31	034-929	C45	CAPACITOR, MICA, 560 PF, 5%	
33	037-109	C2,7	CAPACITOR, TANT, 10 UF, 20V, 10%	
34	037-186	C31	CAPACITOR, TANT, 120 UF, 10V, 10%	
35	037-746	C15,54	CAPACITOR, TANT, 47 UF, 20V, 20%	
39	030-963	C12,16,23,48,57	CAPACITOR, CER, 0.1 UF, 100V	
40	030-094	C28	CAPACITOR, MONO, 1.0 UF	
41	069-018	C46	CAPACITOR, POLY, 0.39 UF, 10%	
42	035-730	C20,21	CAPACITOR, MYLAR, 0.0047 UF, 50V, 5%	
43	030-182	C29,30,32,37,38, 39,41,42,51,52	CAPACITOR, MONO, 0.33 UF, 25V	
44	041-408	R1,33,35,63	RESISTOR, COMP, 10K, 1/4W, 5%	
45	041-410	R10,22,29,31	RESISTOR, COMP, 1K, 1/4W, 5%	
46	041-412	R4,12	RESISTOR, COMP, 4.7K, 1/4W, 5%	
47	041-417	R9	RESISTOR, COMP, 390 OHM, 1/4W, 5%	
48	041-573	R26	RESISTOR, COMP, 75K, 1/4W, 5%	
49	041-442	R19-21,27,38-42 47,48,50,51,53-55,57-59,62,67, 68,72,73	RESISTOR, COMP, 2.7K, 1/4W, 5%	
50	041-482	R11	RESISTOR, COMP, 12K, 1/4W, 5%	
51	041-512	R18,28,17	RESISTOR, COMP, 470K, 1/4W, 5%	
52	041-511	R65	RESISTOR, COMP, 3.9K, 1/4W, 5%	
53	041-514	R56	RESISTOR, COMP, 3.1K, 1/4W, 5%	
54	041-753	R7	RESISTOR, COMP, 62K, 1/4W, 5%	
55	041-538	R3,8,16,36,44	RESISTOR, COMP, 6.2K, 1/4W, 5%	
				E

ASSEMBLY NO. 1373127 TITLE EDITOR PWA, MODULE NO. 7, NTSC/PAL-M

ITEM NO.	AMPEX PART NO.	REFERENCE NUMBER	DESCRIPTION	JEDEC NO. OR MFR. PART NO.
56	041-561	R2,49,52,60,61, 69,70,71,76	RESISTOR, COMP, 5.1K, 1/4W, 5%	
57	041-653	R64	RESISTOR, COMP, 39 OHM, 1/4W, 5%	
58	041-778	R5	RESISTOR, COMP, 2.2M, 1/4W, 5%	
59	041-751	R77	RESISTOR, COMP, 36K, 1/4W, 5%	
60	041-560	R78,79	RESISTOR, COMP, 2K, 1/4W, 5%	
61	041-431	R25,30	RESISTOR, COMP, 150K, 1/4W, 5%	
62	041-406	R24	RESISTOR, COMP, 22K, 1/4W, 5%	
63	041-496	R75	RESISTOR, COMP, 10 OHM, 1/4W, 5%	
64	041-419	R32,34	RESISTOR, COMP, 100 OHM, 1/4W, 5%	
65	057-847	R6	RESISTOR, MF, 267 OHM, 1/8W, 1%	
66	062-998	R66	RESISTOR, MF, 18.7K, 1/8W, 1%	
67	066-656	R14	RESISTOR, MF, 30.1K, 1/8W, 1%	
68	066-183	R13	RESISTOR, MF, 60.4K, 1/8W, 1%	
69	062-561	R15,23	RESISTOR, MF, 61.9K, 1/8W, 1%	
71	280-130		PAD, MTG, XSTR, T0-18	
74	586-075	A12,31,35,38,41, 42,47,49,50,65, 66-68	INTEGRATED CIRCUIT	7400
75	586-076	A13,70,74	INTEGRATED CIRCUIT	7410
76	586-079	A64	INTEGRATED CIRCUIT	7440
77	586-108	A5,6,10,14,28, 51,61	INTEGRATED CIRCUIT	7474
78	586-269	A19	INTEGRATED CIRCUIT	741
79	586-303	A4,20,52	INTEGRATED CIRCUIT	9328
80	586-309	A7,59	INTEGRATED CIRCUIT	9601
81	586-326	A15,33,36,39,43, 57,62,63	INTEGRATED CIRCUIT	7404
82	586-450	A3,29,44-46	INTEGRATED CIRCUIT	DM8570
83	586-533	A24,48,56	INTEGRATED CIRCUIT	74121
84	586-647	A37,58,60,69,71, 72	INTEGRATED CIRCUIT	74107
85	586-705	A22,34	INTEGRATED CIRCUIT	7486
86	586-713	A30	INTEGRATED CIRCUIT	7407
87	586-759	A23,32	INTEGRATED CIRCUIT	7408
88	586-176	A2	INTEGRATED CIRCUIT	7402
89	586-903	A21,53-55	INTEGRATED CIRCUIT	DM9322
90	586-918	A11,73	INTEGRATED CIRCUIT	7432
91	586-923	A16	INTEGRATED CIRCUIT	74163
92	586-440	A9,18	INTEGRATED CIRCUIT	F747
93	587-469	A1,17,40	INTEGRATED CIRCUIT	4031
94	587-322	A8	INTEGRATED CIRCUIT	4049
95	587-291	A25-27	INTEGRATED CIRCUIT	555
97	058-601	R37	RESISTOR, VAR, 1K, TOP ADJ	
98	058-874	R74	RESISTOR, VAR, 50K	
100	058-575	R43,45,46	RESISTOR, VAR, 100K, TOP ADJ	
				E

ASSEMBLY NO. 1373127 TITLE EDITOR PWA, MODULE NO. 7, NTSC/PAL-M

ITEM NO.	AMPEX PART NO.	REFERENCE NUMBER	DESCRIPTION	JEDEC NO. OR MFR. PART NO.
101	120-639	S1	SWITCH, MINI-TOGGLE, SPDT	
102	120-940	S2	SWITCH, MINI-PUSH	
103	6000001-20		KNOB, REF: R74	
				E

SHEET 3 OF 3

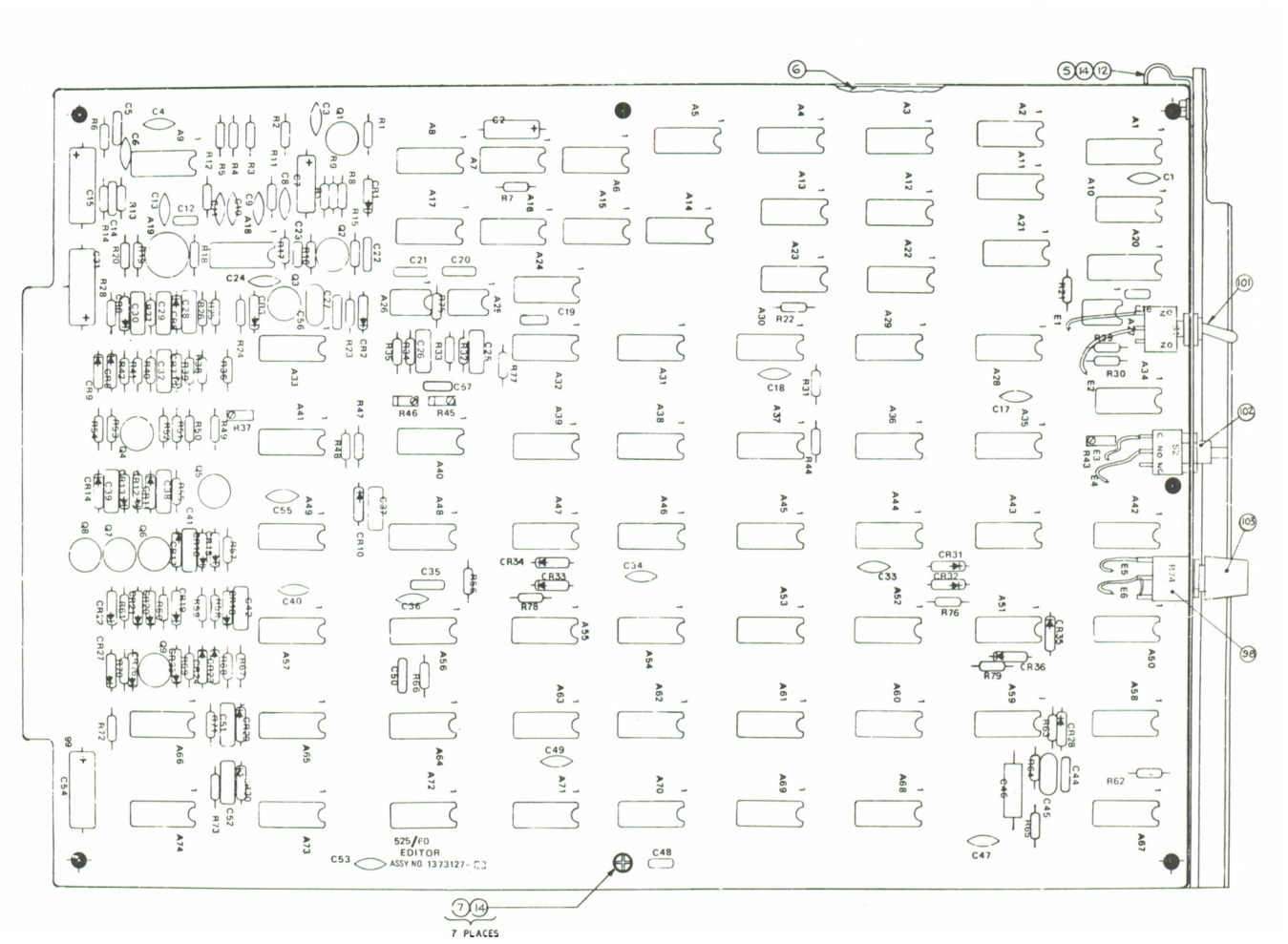

Assembly No. 1373127. Editor PWA, Module No. 7, NTSC/PAL-M

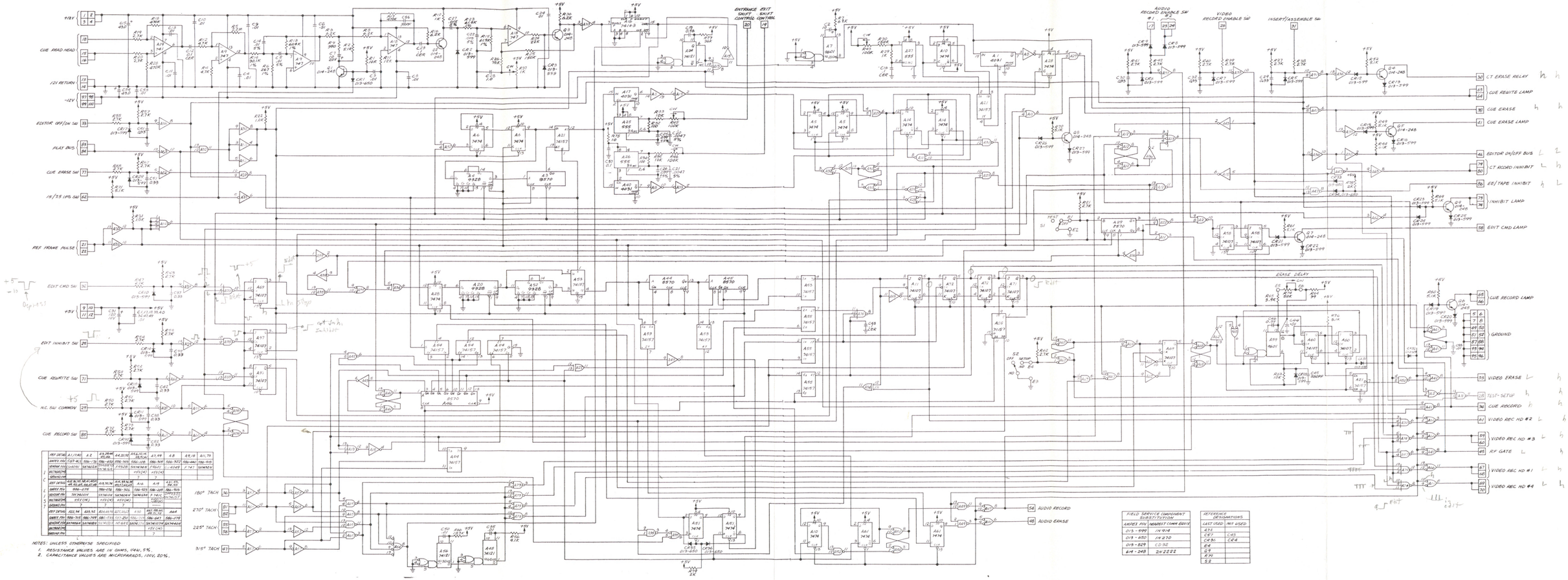

NOTES: UNLESS OTHERWISE SPECIFIED
1. RESISTANCE VALUES ARE IN OHMS, 1/4W, 5%.
2. CAPACITANCE VALUES ARE MICROFARADS, 100V, 20%.

FIELD SERVICE COMPONENT SUBSTITUTION	
AMPEX P/N	NEAREST COMM'L EQUIV.
013-599	1N914
013-650	1N270
013-829	CD-312
649-248	2N2222

REFERENCE DESIGNATIONS	
LAST USED	NOT USED
A73	
CR7	C43
CR36	CR4
Q4	
Q9	
R70	
S2	

Schematic No. 1373129.
Editor PWA, NTSC/PAL-M, Module No. 7

ITEM NO.	AMPEX PART NO.	REFERENCE NUMBER	DESCRIPTION	JEDEC NO. OR MFR. PART NO.
	1373467-02		EDITOR PWA, PAL/SECAM	
3	1373469		SCHEMATIC	
4	1373285-07		OVERLAY	
5	1373227-01		CONTACT, GND	
6	1373272-01		SHIELD, PWB	
7	1373273-01		HANDLE, MODULE	
9	471-325		SCREW, FLAT HD, NO. 4-40 X 3/16	
10	473-325		SCREW, MACH, ASSY, NO. 4 X 0.312 LG	
12	496-004		NUT, ASSEM, NO. 4	
14	501-169		WASHER, PLAIN, NO. 4	
17	013-599	CR2,3,5-32	DIODE	1N914
19	013-650	CR1,33-36	DIODE	1N270
20	014-248	Q1-9	TRANSISTOR	2N2222
24	030-057	C1,3,4,6,8-11,13, 17,18,24,33,34, 36,40,47,49,53, 55	CAPACITOR, CER, 0.01 UF, 100V, 20%	
25	064-368	C19	CAPACITOR, CER,0.56 UF, 50V, ±10%	
26	035-734	C5,14,35,44,50	CAPACITOR, MYLAR, 0.01 UF, 5%, 50V	
27	035-817	C22,27	CAPACITOR, MYLAR, 0.015 UF, 50V, 5%	
28	055-131	C25,26	CAPACITOR, MYLAR, 0.039 UF, 50V, 5%	
30	034-180	C56	CAPACITOR, MICA, 39 PF, 500V, ±5%	
31	034-929	C45	CAPACITOR, MICA, 560 PF, 500V, 5%	
33	037-109	C2,7	CAPACITOR, TANT, 10 UF, 20V, 10%	
34	037-186	C31	CAPACITOR, TANT, 120 UF, 10V, 10%	
35	037-746	C15,54	CAPACITOR, TANT, 47 UF, 20V, 20%	
38	030-182	C29,30,32,37-39, 41,42,51,52	CAPACITOR, MONO, 0.33 UF, 25V, 20%	
39	030-963	C12,16,23,48,57	CAPACITOR, CER, 0.1 UF, 100V, 10%	
40	030-094	C28	CAPACITOR, MONO, 1.0 UF, 25V, 20%	
41	069-018	C46	CAPACITOR, POLY, 0.39 UF, 1%	
42	035-730	C20,21	CAPACITOR, MYLAR, 0.0047 UF, 50V, 5%	
44	041-408	R1,33,35,63	RESISTOR, COMP, 10K, 1/4W, 5%	
45	041-410	R10,22,29,31	RESISTOR, COMP, 1K, 1/4W, 5%	
46	041-412	R4,12	RESISTOR, COMP, 4.7K, 1/4W, 5%	
47	041-417	R9	RESISTOR, COMP, 390 OHM, 1/4W, 5%	
48	041-573	R26	RESISTOR, COMP, 75K, 1/4W, 5%	
49	041-442	R19-21,27,38-42, 47,48,50,51, 53-55,57-59,62, 67,68,72,73	RESISTOR, COMP, 2.7K, 1/4W, 5%	
50	041-482	R11	RESISTOR, COMP, 12K, 1/4W, 5%	
51	041-512	R17,18,28	RESISTOR, COMP, 470K, 1/4W, 5%	
				A

ASSEMBLY NO. 1373467 TITLE EDITOR PWA, MODULE NO. 7, PAL/SECAM

ITEM NO.	AMPEX PART NO.	REFERENCE NUMBER	DESCRIPTION	JEDEC NO. OR MFR. PART NO.
52	041-511	R65	RESISTOR, COMP, 3.9K, 1/4W, 5%	
53	041-514	R56	RESISTOR, COMP, 9.1K, 1/4W, 5%	
54	041-753	R7	RESISTOR, COMP, 62K, 1/4W, 5%	
55	041-538	R3,8,16,36,44	RESISTOR, COMP, 6.2K, 1/4W, 5%	
56	041-561	R2,49,52,60,61, 69,70,71,76	RESISTOR, COMP, 5.1K, 1/4W, 5%	
57	041-653	R64	RESISTOR, COMP, 39 OHM, 1/4W, 5%	
58	041-778	R5	RESISTOR, COMP, 2.2M, 1/4W, 5%	
59	041-751	R77	RESISTOR, COMP, 36K, 1/4W, 5%	
61	041-431	R25,30	RESISTOR, COMP, 150K, 1/4W, 5%	
62	041-406	R24	RESISTOR, COMP, 22K, 1/4W, 5%	
63	041-496	R75	RESISTOR, COMP, 10 OHM, 1/4W, 5%	
64	041-419	R32,34	RESISTOR, COMP, 100 OHM, 1/4W, 5%	
65	057-847	R6	RESISTOR, MF, 267 OHM, 1/8W, 1%	
66	062-998	R66	RESISTOR, MF, 18.7K, 1/8W, 1%	
67	066-656	R14	RESISTOR, MF, 30.1K, 1/8W, 1%	
68	066-183	R13	RESISTOR, MF, 60.4K, 1/8W, 1%	
69	062-561	R15,23	RESISTOR, MF, 61.9K, 1/8W, 1%	
70	041-560	R78,79	RESISTOR, COMP, 2K, 1/4W, 5%	
71	280-130		PAD, MTG, XSTR, T0-18	
73	586-450	A29,44-46,75	INTEGRATED CIRCUIT	DM8570N
74	586-075	A12,31,35,38, 41,42,47,49,50, 65-68	INTEGRATED CIRCUIT	7400
75	586-076	A13,70,74	INTEGRATED CIRCUIT	7410
76	586-079	A64	INTEGRATED CIRCUIT	7440
77	586-108	A5,6,10,14,28, 51,61	INTEGRATED CIRCUIT	7474
78	586-269	A19	INTEGRATED CIRCUIT	741
79	586-303	A4,20,52	INTEGRATED CIRCUIT	9328
80	586-309	A7,59	INTEGRATED CIRCUIT	9601
81	586-326	A15,33,36,39, 43,57,62,63	INTEGRATED CIRCUIT	7404
83	586-533	A48,56,24	INTEGRATED CIRCUIT	74121
84	586-647	A37,58,60,69 71,72	INTEGRATED CIRCUIT	74107
85	586-705	A22,34	INTEGRATED CIRCUIT	7486
86	586-713	A30	INTEGRATED CIRCUIT	7407
87	586-759	A23,32	INTEGRATED CIRCUIT	7408
88	586-109	A2	INTEGRATED CIRCUIT	7402
89	586-903	A21,53-55	INTEGRATED CIRCUIT	DM9322 74157
90	586-918	A11,73	INTEGRATED CIRCUIT	7432
91	586-923	A16	INTEGRATED CIRCUIT	74163
92	586-440	A9,18	INTEGRATED CIRCUIT	F747
93	587-469	A1,17,40	INTEGRATED CIRCUIT	4031
94	587-322	A8	INTEGRATED CIRCUIT	4049 A

ASSEMBLY NO. 1373467 TITLE EDITOR PWA, MODULE NO. 7, PAL/SECAM

ITEM NO.	AMPEX PART NO.	REFERENCE NUMBER	DESCRIPTION	JEDEC NO. OR MFR. PART NO.
95	587-291	A25-27	INTEGRATED CIRCUIT	555
97	058-601	R37	RESISTOR, VAR, 1K, 1/2W, 10%	
98	058-874	R74	RESISTOR, VAR, 50K, 1/2W, 10%	
100	058-575	R43,45,46	RESISTOR, VAR, 100K, 1/2W, 10%	
101	120-639	S1	SWITCH, MINI-TOGGLE, SPDT	
102	120-940	S2	SWITCH, MINI-PUSH	
103	6000001-20		KNOB, REF: R74	
				A

SHEET 3 OF 3

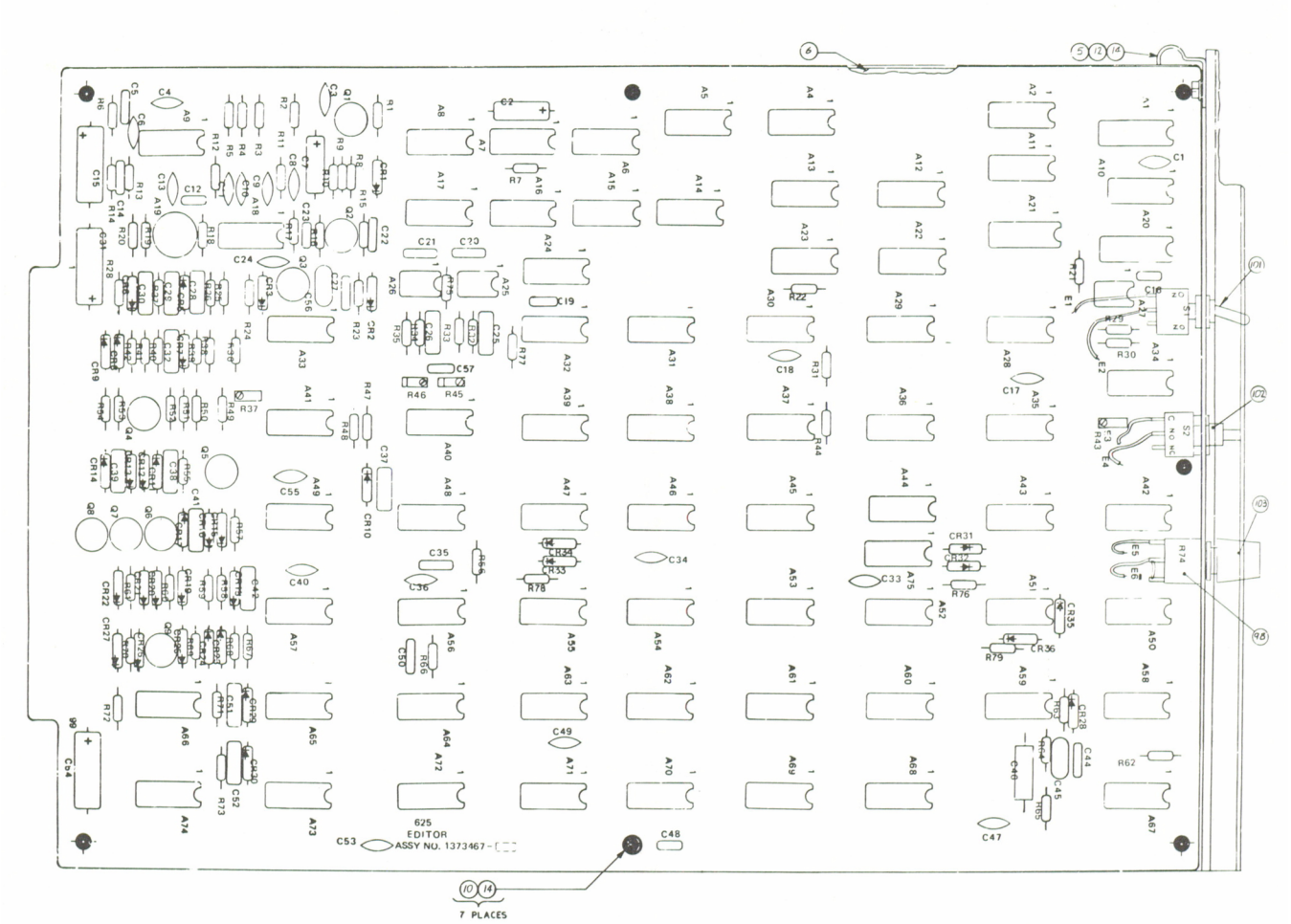

Assembly No. 1373467. Editor PWA, Module No. 7, PAL/SECAM

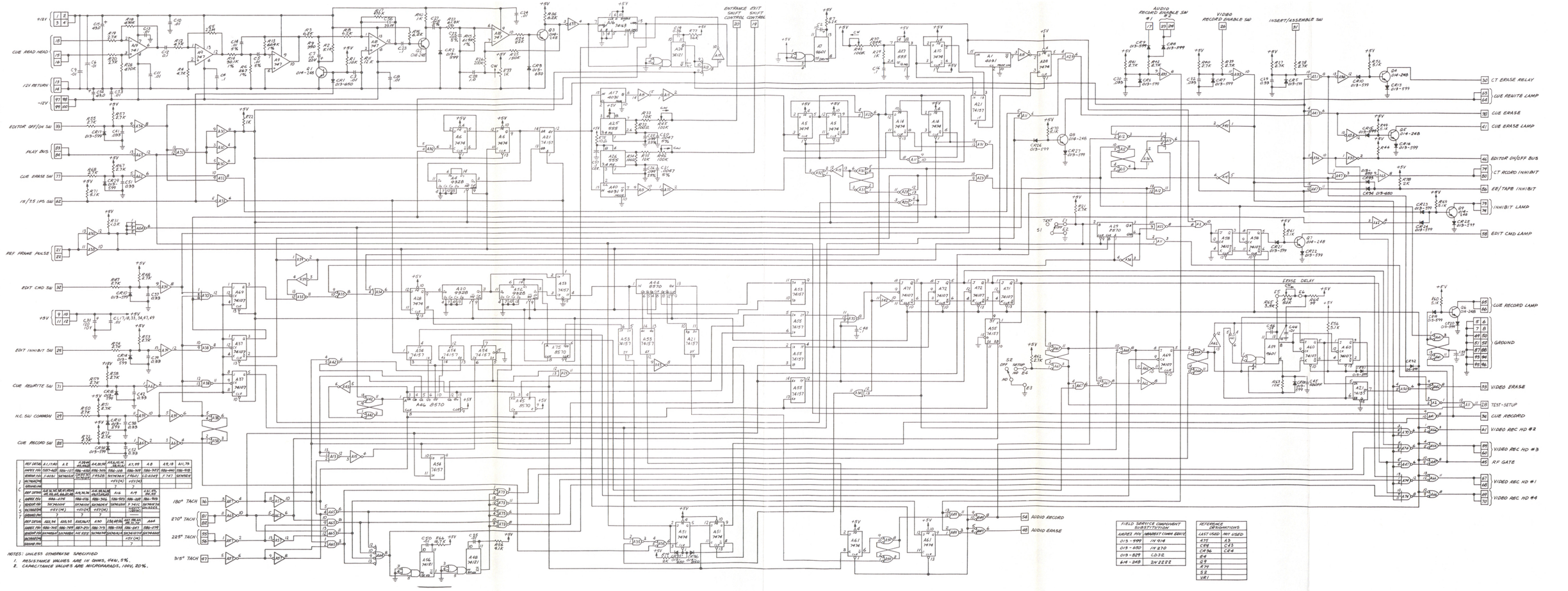

REF DESIG	A1,7,8,9	A 2	A 3 A4 A5 A6	A10,11,12,13,14,15,16	A17,99	A 18	A19,78	A21,79
AMPEX P/N	5307-405	556-177	556-450	556-305	556-498	556-309	556-327	556-440	556-918
VENDOR P/N	7-4081	SN74S04	DM8570 SN74S74	F9328	SN74LS04	F9621	SD-6048	F747	SN74S64
15/7.5 CONTROL					+5V(K)	+5V(K)			
GROUND PIN					7	7			
REF DESIG	A22,24,26,28,30,32,34,36,38,40,42,44,46,48,50,52			A45,46,56	A47,48,49,50,51,52,53,54,55	A6	A9	+5V, 82, 84, 90
AMPEX P/N	556-078			556-176	556-384	556-593	556-328	556-909
VENDOR P/N	SN74S00			SN74S04	SN74S08	SN74S38	P 74S1C	SN74S138
15/7.5 CONTROL	+5V(M)			+5V(M)	+5V(M)			15/7.5 CONTROL
GROUND PIN	7			7	7			GROUND
REF DESIG	A22,24	A26,30	A28,32	A40	A34,48,50		A60	A66
AMPEX P/N	556-765	556-769	556-767	827-211	556-315	556-570	556-667	556-079
VENDOR P/N	SN74S64	SN74S65	MC 8212	SN74S74	SN74S10	SN74LS10	SN74S133	SN74S466
15/7.5 CONTROL							+5V (M)	
GROUND PIN							7	

NOTES: UNLESS OTHERWISE SPECIFIED
1. RESISTANCE VALUES ARE IN OHMS, 1/4W, 5%.
2. CAPACITANCE VALUES ARE MICROFARADS, 100V, 20%.

FIELD SERVICE COMPONENT SUBSTITUTION	
AMPEX P/N	HARRIS CHAN ELEC
013-599	IN 914
013-650	IN 270
013-829	CD 32
014-248	2N 2222

REFERENCE DESIGNATIONS	
LAST USED	NOT USED
A75	A3
C84	C43
CR36	C44
E4	
Q9	
R79	
S2	
VR1	

B

Schematic No. 1373469.
Editor PWA, PAL/SECAM, Module No. 7

ITEM NO.	AMPEX PART NO.	REFERENCE NUMBER	DESCRIPTION	JEDEC NO. OR MFR. PART NO.
	1374928-01		CUE PWA, MODULE NO. 8 (NHA 1373036)	
3	1374930		SCHEMATIC	
5	1373227-01		CONTACT, GROUND	
7	1373272-01		SHIELD, PWB	
8	1373273-12		HANDLE, MODULE	
10	1373285-41		OVERLAY	
12	6000001-20		KNOB, BLACK, REF: R21, 136	
13	4580100-10	T1	TRANSFORMER	
14	103307-01		SPACER, REF: R186, 203	
17	013-172	VR3-9	DIODE	1N749A
18	013-983	VR1,2	DIODE	1N752A
19	013-599	CR1-4,8,11-21,24, 27,28	DIODE	1N914
20	013-650	CR5	DIODE	HPA2190
21	013-678	CR6,7,9,10,22,23, 25,26	DIODE	1N4005
22	580-135	Q12,13	TRANSISTOR, TO18	2N4104
23	014-247	Q10	TRANSISTOR, TO5	2N2219
24	014-248	Q3,14,15,19,20,31	TRANSISTOR, TO18	2N2222
25	014-364	Q9	TRANSISTOR, TO5	2N2905A
26	014-383	Q1,2	TRANSISTOR, TO18	2N2484
27	014-387	Q16,17,21-26,29,30	TRANSISTOR, TO18	2N2902A
28	014-720	Q34	TRANSISTOR	2N3740
29	014-755		HEATSINK, TRANSISTOR, REF: Q4,7	
30	014-757	Q27,28	TRANSISTOR	2N3819
31	014-947	Q33	TRANSISTOR	2N3766
32	014-793		PAD, MTG, XSTR, REF: Q27,28	
34	580-772	Q5,7,18	TRANSISTOR, TO5	2N5322S
35	580-771	Q4,6	TRANSISTOR, TO5	2N5320S
36	580-616	Q32	TRANSISTOR, TO5	2N4036
37	580-621	Q8	TRANSISTOR, TO5	D44C8B
38	580-622	Q11	TRANSISTOR	D45C8B
39	014-959		HEATSINK, XSTR, REF: Q8,11	
40	020-485	K1	RELAY, 16V	CLARE HFW 1201B00
41	020-407		PAD, MTG, RELAY	
42	030-057	C9,12-14,18,21,22, 30,31,44,61,67,68, 72,76-78,80-82,92, 96,106,108	CAPACITOR, CER, DISC, 0.01 UF, 100V, 20%	
44	034-156	C49	CAPACITOR, MICA, 5 PF, 500V, ±0.5 PF	
45	034-177	C19	CAPACITOR, MICA, 100 PF, 500V, 5%	
46	034-180	C87	CAPACITOR, MICA, 39 PF, 500V, 5%	
47	034-286	C37,56	CAPACITOR, MICA, 200 PF, 500V, 5%	
48	034-288	C95	CAPACITOR, MICA, 390 PF, 500V, 5%	
49	034-291	C54	CAPACITOR, MICA, 1600 PF, 500V, 5%	
50	034-386	C7,33,66	CAPACITOR, MICA, 910 PF, 100V, 5%	
51	034-921	C60	CAPACITOR, MICA, 1300 PF, 500V, 5%	
52	034-922	C57	CAPACITOR, MICA, 2400 PF, 500V, 5%	
53	034-935	C84	CAPACITOR, MICA, 240 PF, 500V, 5%	
54	034-937	C55	CAPACITOR, MICA, 160 PF, 500V, 5%	
55	034-952	C48	CAPACITOR, MICA, 6200 PF, 300V, 5%	
56	034-961	C104	CAPACITOR, MICA, 120 PF, 500V, 5%	
57	034-370	C63	CAPACITOR, MICA, 6800 PF, 100V, 5%	
58	056-163	C58	CAPACITOR, MICA, 470 PF, 500V, 5%	
59	034-153	C36,70	CAPACITOR, MICA, 1000 PF, 500V, 5%	
60	056-225	C74,75	CAPACITOR, MICA, 750 PF, 300V, 5%	
61	056-109	C35,71	CAPACITOR, MICA, 8200 PF, 100V, 5%	

ITEM NO.	AMPEX PART NO.	REFERENCE NUMBER	DESCRIPTION	JEDEC NO. OR MFR. PART NO.
64	037-985	C59	CAPACITOR, TANT, 15 UF, 20V, 10%	
65	037-109	C107	CAPACITOR, TANT, 10 UF, 20V, 10%	
66	037-728	C110,111	CAPACITOR, TANT, 6.8 UF, 6V, 10%	
67	037-894	C32,113	CAPACITOR, TANT, 100 UF, 10V, 20%	
68	037-954	C1,3,6,101,102	CAPACITOR, TANT, 22 UF, 15V, 20%	
69	037-957	C2,5,16,23,40-42, 65,85,86,89,90,99, 100,114	CAPACITOR, TANT, 68 UF, 15V, 20%	
71	037-940	C24-26,28,29,62, 64,103,105,112	CAPACITOR, TANT, 47 UF, 35V, 20%	
73	037-960	C46,53	CAPACITOR, TANT, 150 UF, 15V, 20%	
74	037-968	C15,109	CAPACITOR, TANT, 6.8 UF, 6V, 20%	
75	037-298	C51,52	CAPACITOR, TANT, 47 UF, 6V, 20%	
79	055-887	C34	CAPACITOR, MYLAR, FOIL, 0.039 UF, 100V, 10%	
80	038-262	C17,98	CAPACITOR, MYLAR, FOIL, 0.033 UF, 100V, 10%	
81	038-263	C43,47	CAPACITOR, MYLAR, FOIL, 0.047 UF, 100V, 10%	
82	038-264	C50	CAPACITOR, MYLAR, FOIL, 0.068 UF, 100V, 10%	
83	069-025	C91	CAPACITOR, MYLAR, FOIL, 0.027 UF, 100V, 10%	
85	035-893	C83,94	CAPACITOR, MYLAR, 0.2 UF, 50V, 5%	
86	035-734	C38	CAPACITOR, MYLAR, 0.01 UF, 50V, 5%	
87	035-828	C45,73	CAPACITOR, MYLAR, 0.022 UF, 50V, 5%	
88	055-904	C4	CAPACITOR, MYLAR, 0.15 UF, 50V, 5%	
89	055-195	C97	CAPACITOR, MYLAR, 0.0068, 5V	
90	038-315	C10	CAPACITOR, VAR, 37-250 PF	
91	038-307	C11	CAPACITOR, VAR, 170–600 PF	
92	038-308	C79	CAPACITOR, VAR, 70–350 PF	
95	030-101	C8,27,39,88	CAPACITOR, MONO, 0.47 UF, 25V, 20%	
96	030-182	C20,93	CAPACITOR, MONO, 0.33 UF, 25V, 20%	
97	030-223	C69	CAPACITOR, MONO, 2.2 UF, 25V, 20%	
101	058-565	R90,142	RESISTOR, VAR, CER, 10K, 1/2W, 10%	
102	058-566	R3,24	RESISTOR, VAR, CER, 10K, 1/2W, 10%	
103	058-564	R95	RESISTOR, VAR, CER, 500 OHM, 1/2W, 10%	
104	058-575	R154,159	RESISTOR, VAR, CER, 100K, 1/2W, 10%	
105	058-649	R71	RESISTOR, VAR, CER, 1M, 1/2W, 10%	
107	058-868	R37	RESISTOR, VAR, CER, 100K, 1/2W, 10%	
108	058-896	R136	RESISTOR, VAR, CER, 10K, 1/2W, 20%	
109	058-897	R21	RESISTOR, VAR, CER, 100K, 1/2W, 20%	
110	058-873	R41	RESISTOR, VAR, CER, 100K, 1/2W, 20%	
112	041-528	R187	RESISTOR, COMP, 300 OHM, 1/2W, 5%	
113	041-002	R54,61,62,65,108	RESISTOR, COMP, 10 OHM, 1/2W, 5%	
114	041-283	R39,51,182	RESISTOR, COMP, 47 OHM, 1/2W, 5%	
115	049-360	R184,189	RESISTOR, COMP, 5.1 OHM, 1/2W, 5%	
117	041-095	R52,53	RESISTOR, COMP, 10 OHM, 1W, 5%	
118	041-831	R188	RESISTOR, COMP, 150 OHM, 1W, 5%	
120	041-667	R186,203	RESISTOR, COMP, 10 OHM, 2W, 5%	
122	041-394	R73,109-111,115, 116,152,173	RESISTOR, COMP, 100K, 1/4W, 5%	
123	041-408	R18,44-46,49,50,55, 56,63,64,74,98,99, 100,107,123,126, 130,133,135,139, 141,172,172,175, 177,199,200	RESISTOR, COMP, 10K, 1/4W, 5%	
125	041-409	R7,81	RESISTOR, COMP, 15K, 1/4W, 5%	
126	041-410	R16,17,47,48,77, 79,83,93,104,105, 148,151,155,163, 197,204	RESISTOR, COMP, 1K, 1/4W, 5%	

ITEM NO.	AMPEX PART NO.	REFERENCE NUMBER	DESCRIPTION	JEDEC NO. OR MFR. PART NO.
128	041-411	R114,193	RESISTOR, COMP, 47K, 1/4W, 5%	
129	041-406	R194,195	RESISTOR, COMP, 22K, 1/4W, 5%	
130	041-415	R13,14	RESISTOR, COMP, 68K, 1/4W, 5%	
131	041-417	R38,149,150,179	RESISTOR, COMP, 390 OHM, 1/4W, 5%	
132	041-419	R43,57,59,89	RESISTOR, COMP, 100 OHM, 1/4W, 5%	
133	041-425	R94	RESISTOR, COMP, 47 OHM, 1/4W, 5%	
134	041-428	R2,4-6,160	RESISTOR, COMP, 470 OHM, 1/4W, 5%	
135	041-429	R11,12	RESISTOR, COMP, 680 OHM, 1/4W, 5%	
136	041-430	R27,40,76	RESISTOR, COMP, 1.5K, 1/4W, 5%	
137	041-440	R58,60	RESISTOR, COMP, 1.2K, 1/4W, 5%	
138	041-442	R180	RESISTOR, COMP, 2.7K, 1/4W, 5%	
139	041-443	R92,106	RESISTOR, COMP, 39K, 1/4W, 5%	
140	041-484	R119	RESISTOR, COMP, 120K, 1/4W, 5%	
141	041-495	R181	RESISTOR, COMP, 8.2K, 1/4W, 5%	
142	041-504	R97,144	RESISTOR, COMP, 510 OHM, 1/4W, 5%	
143	041-505	R96,165,166	RESISTOR, COMP, 620 OHM, 1/4W, 5%	
144	041-507	R183	RESISTOR, COMP, 5.6K, 1/4W, 5%	
145	041-508	R86,91	RESISTOR, COMP, 20K, 1/4W, 5%	
146	041-512	R42,167,169,170, 202	RESISTOR, COMP, 470K, 1/4W, 5%	
147	041-518	R178,196	RESISTOR, COMP, 33K, 1/4W, 5%	
148	041-519	R9,69,174,201	RESISTOR, COMP, 56K, 1/4W, 5%	
149	041-538	R1,8,10,19,20,101, 102,120-122,124, 125,127-129,131, 132,134,137,138, 143,145-147,198	RESISTOR, COMP, 6.2K, 1/4W, 5%	
151	041-539	R23	RESISTOR, COMP, 130 OHM, 1/4W, 5%	
152	041-549	R176	RESISTOR, COMP, 13K, 1/4W, 5%	
153	041-568	R22,25	RESISTOR, COMP, 4.7M, 1/4W, 5%	
154	041-569	R103	RESISTOR, COMP, 300 OHM, 1/4W, 5%	
155	041-570	R190	RESISTOR, COMP, 2.4K, 1/4W, 5%	
156	041-571	R185	RESISTOR, COMP, 3.6K, 1/4W, 5%	
157	041-561	R88,140	RESISTOR, COMP, 5.1K, 1/4W, 5%	
158	041-612	R15	RESISTOR, COMP, 30K, 1/4W, 5%	
159	041-735	R26	RESISTOR, COMP, 91 OHM, 1/4W, 5%	
160	041-748	R117,118	RESISTOR, COMP, 11K, 1/4W, 5%	
161	041-774	R28	RESISTOR, COMP, 1.5M, 1/4W, 5%	
162	041-782	R164,168	RESISTOR, COMP, 3.3M, 1/4W, 5%	
163	041-754	R113	RESISTOR, COMP, 91K, 1/4W, 5%	
164	041-414	R112	RESISTOR, COMP, 2.2K, 1/4W, 5%	
165	041-740	R78,80	RESISTOR, COMP, 200 OHM, 1/4W, 5%	
166	041-435	R153,161	RESISTOR, COMP, 150 OHM, 1/4W, 5%	
168	041-758	R75	RESISTOR, COMP, 200K, 1/4W, 5%	
173	062-882	R84	RESISTOR, MF, 274K, 1/8W, 1%	
174	062-893	R66,82	RESISTOR, MF, 392 OHM, 1/8W, 1%	
176	062-864	R85	RESISTOR, MF, 150 OHM, 1/8W, 1%	
177	062-796	R67,68,87	RESISTOR, MF, 1M, 1/8W, 1%	
178	062-624	R31,32	RESISTOR, MF, 1K, 1/8W, 1%	
180	062-983	R70,191	RESISTOR, MF, 10K, 1/8W, 1%	
181	066-014	R192	RESISTOR, MF, 47.5K, 1/8W, 1%	
182	066-009	R162	RESISTOR, MF, 33.2K, 1/8W, 1%	
183	066-017	R156	RESISTOR, MF, 75K, 1/8W, 1%	
184	066-029	R157,158	RESISTOR, MF, 357K, 1/8W, 1%	
185	066-034	R34-36	RESISTOR, MF, 475K, 1/8W, 1%	
187	066-387	R29,33	RESISTOR, MF, 53.6K, 1/8W, 1%	
188	066-035	R72	RESISTOR, MF, 499K, 1/8W, 1%	
191	120-639	S3	SWITCH, TOGGLE, SPDT	

ITEM NO.	AMPEX PART NO.	REFERENCE NUMBER	DESCRIPTION	JEDEC NO. OR MFR. PART NO.
192	120-440	S1	SWITCH, TOGGLE, SPDT	
193	051-646	L1,2	INDUCTOR, FIXED, 2.7 MH, 10%	
194	051-306	L3	INDUCTOR, FIXED, 39 MH, 10%	
195	540-013	L7	INDUCTOR, FIXED, 10 UH, 10%	
196	540-074	L4,5	INDUCTOR, FIXED, 1.5 MH, 10%	
197	541-982	L6	INDUCTOR, FIXED, 8.2 MH, 5%	
200	581-266	A2	ISOLATOR, OPTICALLY COUPLED	VTL2C1
201	586-075	A18	INTEGRATED CIRCUIT	SN7400N
202	586-076	A17,28,29	INTEGRATED CIRCUIT	SN7410N
203	586-077	A21	INTEGRATED CIRCUIT	SN7420N
204	586-108	A11	INTEGRATED CIRCUIT	SN7474N
205	586-153	A13,25	INTEGRATED CIRCUIT	MC846P
206	586-155	A14	INTEGRATED CIRCUIT	MC862P
207	586-269	A4,8,27,31	INTEGRATED CIRCUIT	UA741C
208	586-283	A19,20	INTEGRATED CIRCUIT	SN7493N
209	586-326	A15	INTEGRATED CIRCUIT	SN7404N
204a	586-533	A30	INTEGRATED CIRCUIT	SN74121N
205a	586-647	A6,16	INTEGRATED CIRCUIT	SN74107N
206a	587-168	A9,10	INTEGRATED CIRCUIT	CD4016AE
207a	587-169	A23	INTEGRATED CIRCUIT	HA2-911-5
208a	587-170	A26	INTEGRATED CIRCUIT	HA2-2605-5
209a	587-144	A7,12	INTEGRATED CIRCUIT	F9602
210	587-217	A1	INTEGRATED CIRCUIT	DG200BA
211	587-240	A3,5,22,24	INTEGRATED CIRCUIT	HA2-2625-5
212	143-981		JACK, CLOSED ENTRY, REF: J1,13ABCD,J2-12ABC	
213	250-188		BUMPER, PAD	
214	280-130		PAD, MTG, XSTR, TO18, REF: Q1-3,12-17,19-26,29-31	
215	280-131		PAD, MTG, XSTR, REF: Q4,7	
216	280-998		PAD, MTG, XSTR, TO5, REF: A2,5,6,9,10,18,32	
218	302-395		STRAP, CABLE	
220	471-061		SCREW, PAN HD, 4 X 40 X 0.312 LG	
221	471-062		SCREW, PAN HD, 4 X 40 X 0.375 LG	
222	471-063		SCREW, PAN HD, 4 X 40 X 0.437 LG	
223	471-325		SCREW, FLAT HD, 4 X 40 X 0.187 LG	
224	473-325		SCREW, PAN HD, XREC, ASSEM, 4 X 40 X 0.312 LG	
226	496-004		NUT, KEP, NO. 4-40	
227	502-129		WASHER, LOCK	
228	501-169		WASHER, FLAT, NO. 4-40	
229	501-729		WASHER, SHOULDER	
230	580-648		MOUNTING HARDWARE, XSTR	
233	602-012	J1-13	PLUG, SHORTING	

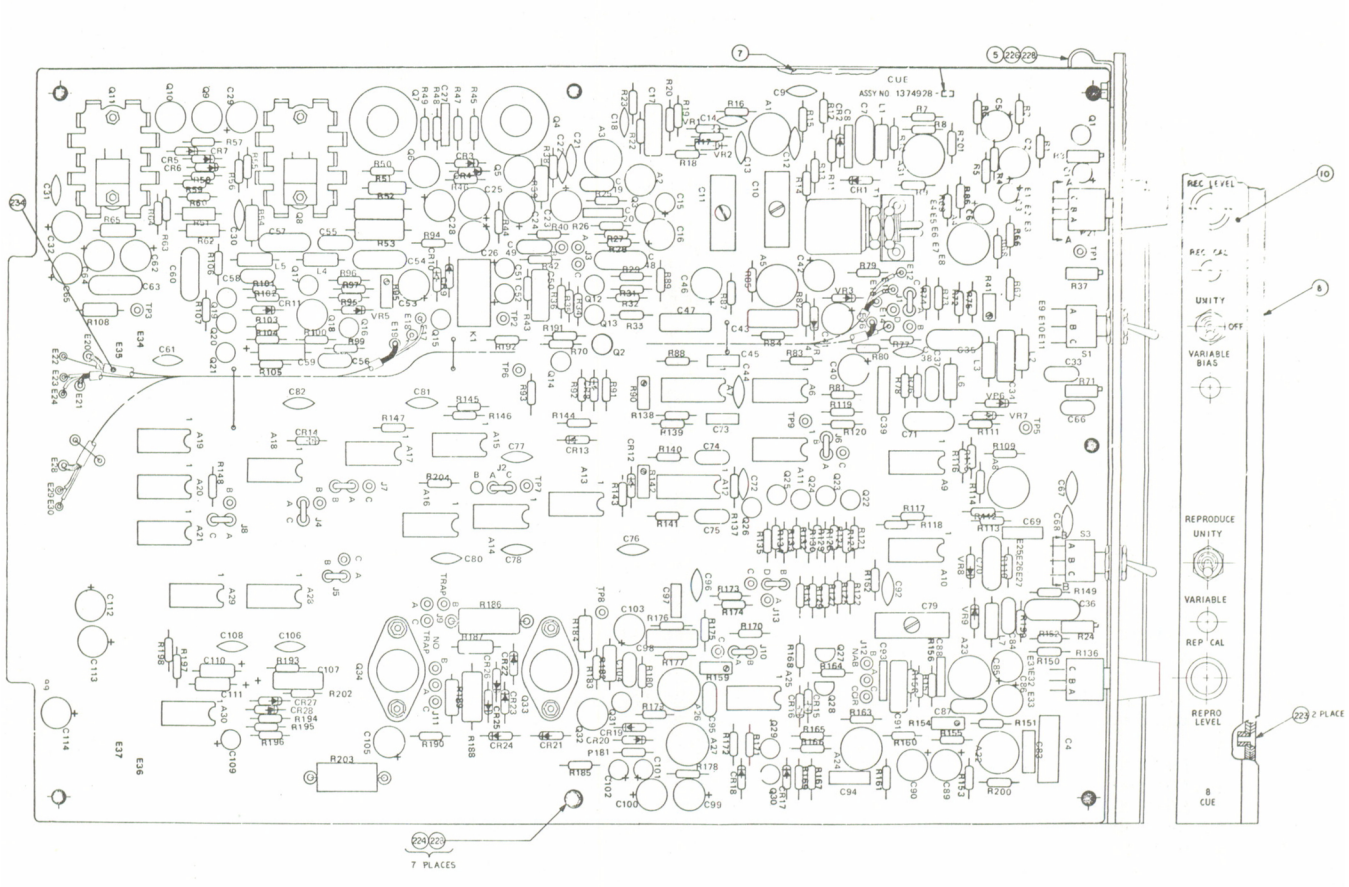

Assembly No. 1374928. Cue PWA, Module No. 8

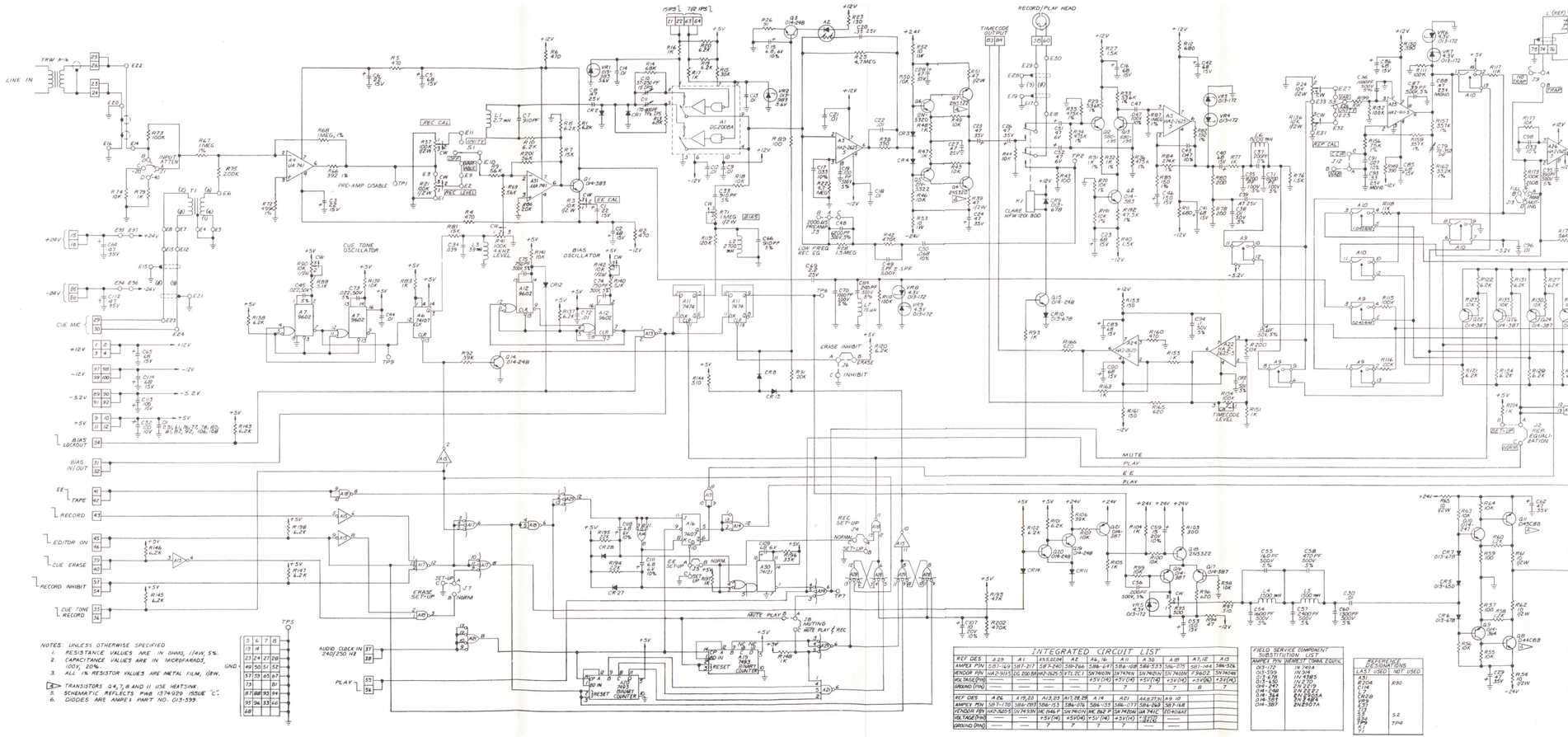

INTEGRATED CIRCUIT LIST

REF DES	A25	A1	A5,22,24	A2	A6, 16	A11	A30	A18	A3,12	A15
AMPEX P/N	587-169	587-217	587-240	586-266	586-647	584-108	586-533	584-075	587-144	586-326
VENDOR P/N	LM2-9015	DG 200 BA	MM2-3625	741, 2CL	SN7403N	SN7493N	SN7407N	SN7402N	7 3602	SN74040
VOLTAGE(PIN)	—	—	—	—	+5V(14)	+5V(14)	+5V(14)	+5V(14)	+5V(14)	+5V(14)
GROUND (PIN)	—	—	—	—	7	7	7	7	8	7

REF DES	A26	A19,20	A13,23	A17,18,29	A14	A21	A4&27 (A)	A9	10
AMPEX P/N	587-170	584-2970	586-153	586-076	586-155	586-177	584-068	587-168	
VENDOR P/N	LM2-3605	SN7493N	MC 846 P	SN7401N	MC 867 P	SN 7404N	UA 741C	CD 4016AE	
VOLTAGE(PIN)	—	—	+5V(14)	+5V(14)	+5V(14)	+5V(14)	VSS(7) VEE(4)	—	
GROUND (PIN)	—	—	7	7	7	7	—	—	

FIELD SERVICE COMPONENT SUBSTITUTION LIST

AMPEX P/N	INTERSIL P/N	EQUIV.
013-172	IN 749A	
013-339	IN 914	
013-478	IN 4985	
013-480	IN 270	
014-247	2N 2219	
014-248	2N 2222A	
014-368	SN 54154	
014-383	SN 54184	
014-387	2N 2907A	

REFERENCE DESIGNATIONS

LAST USED	NOT USED
A31	
A204	
C114	R30
L7	
CR28	
E73	
J13	S2
P94	TP4
Y1	

Schematic No. 1374930.
Cue PWA, Module No. 8

ITEM NO.	AMPEX PART NO.	REFERENCE NUMBER	DESCRIPTION	JEDEC NO. OR MFR. PART NO.
	1373478-04		AUDIO PWA	
3	1373480		SCHEMATIC	
5	1373227-01		CONTACT, GND	
7	1373272-01		SHIELD, PWB	
8	1373273-12		HANDLE, MDL	
10	1373285-09		OVERLAY	
12	6000001-20		KNOB, BLK, REF: R21,136	
13	013-172	VR3-9	DIODE, ZENER	1N749A
14	103307-01		SPACER, REF: R169,177	
15	013-983	VR1,2	DIODE, ZENER	1N752A
17	020-786	K1	RELAY, REED, SPST	
19	013-599	CR1-7,12,19 24-27	DIODE	1N914
21	013-650	CR9	DIODE	1N270
23	013-678	CR8,10,11,20-23, 28	DIODE	1N4385
24	014-247	Q16	TRANSISTOR	2N2219
25	014-248	Q3,12,13,20,31	TRANSISTOR	2N2222
27	014-383	Q1,2,18,19	TRANSISTOR	2N2484
28	014-387	Q8,10,14,21-27	TRANSISTOR	2N2907A
29	014-720	Q33	TRANSISTOR	2N3740
30	014-755		HEATSINK, XSTR, REF: Q4,7	
31	014-757	Q28,29	TRANSISTOR	2N3819
32	014-947	Q32	TRANSISTOR	2N3766
33	014-793		SPACER, XSTR, REF: Q28,29	
36	580-167	Q4,6	TRANSISTOR	2N5320
37	580-616	Q30	TRANSISTOR	2N4036
38	580-621	Q9	TRANSISTOR	D44C8B
39	580-622	Q17	TRANSISTOR	D45C8B
40	014-959		HEATSINK, XSTR, REF: Q9,17	
41	014-364	Q15,34	TRANSISTOR	2N2905A
42	580-166	Q5,7,11	TRANSISTOR	2N5322
43	030-057	C4,12-16,18,23, 24,38,47,52,53, 54,56,59,60,73, 81,82,89,90,91	CAPACITOR, DISC, 0.01 UF, 100V, 20%	
44	034-156	C25	CAPACITOR, MICA, 5PF, 500V, ±0.5%	
45	034-177	C19	CAPACITOR, MICA, 100 PF, 500V, 5%	
46	034-180	C63	CAPACITOR, MICA, 39 PF, 500V, 5%	
47	034-181	C75	CAPACITOR, MICA, 47 PF, 500V, 5%	
48	034-286	C35	CAPACITOR, MICA, 200 PF, 500V, 5%	

D

ASSEMBLY NO. 1373478 TITLE AUDIO PWA, MODULE NO. 9/10

ITEM NO.	AMPEX PART NO.	REFERENCE NUMBER	DESCRIPTION	JEDEC NO. OR MFR. PART NO.
49	034-288	C83	CAPACITOR, MICA, 390 PF, 500V, 5%	
50	034-291	C33	CAPACITOR, MICA, 1600 PF, 500V, 5%	
51	034-386	C48,49	CAPACITOR, MICA, 910 PF, 100V, 5%	
52	034-921	C41	CAPACITOR, MICA, 1300 PF, 500V, 5%	
53	034-922	C36	CAPACITOR, MICA, 2400 PF, 500V, 5%	
54	034-935	C80	CAPACITOR, MICA, 240 PF, 500V, 5%	
55	034-937	C34	CAPACITOR, MICA, 160 PF, 500V, 5%	
56	034-948	C7	CAPACITOR, MICA, 910 PF, 500V, 5%	
57	034-952	C22	CAPACITOR, MICA, 6200 PF, 300V, 5%	
58	034-961	C87	CAPACITOR, MICA, 120 PF, 500V, 5%	
59	034-370	C46	CAPACITOR, MICA, 6800 PF, 100V, 5%	
60	056-163	C39,71	CAPACITOR, MICA, 470 PF, 500V, 5%	
61	034-153	C78	CAPACITOR, MICA, 1000 PF, 500V, 5%	
62	056-225	C5,6	CAPACITOR, MICA, 750 PF, 300V, 5%	
63	034-161	C98	CAPACITOR, MICA, 2000 PF, 500V, 5%	
65	037-109	C8	CAPACITOR, TANT, 10 UF, 20V, 10%	
66	037-181	C27,31	CAPACITOR, TANT, 47 UF, 35V, 10%	
67	037-991	C40	CAPACITOR, TANT, 22 UF, 15V, 10%	
68	037-728	C57,58	CAPACITOR, TANT, 6.8 UF, 6V, 10%	
69	037-892	C21	CAPACITOR, TANT, 47 UF, 20V, 20%	
70	037-894	C44,96	CAPACITOR, TANT, 200 UF, 10V, 20%	
71	037-954	C1,92,93	CAPACITOR, TANT, 22 UF, 15V, 20%	
72	037-957	C2,3,43,50,51,61, 62,64,65,84,85,97	CAPACITOR, TANT, 68 UF, 15V, 20%	
73	037-940	C26,30,37,42,45, 88,94,95	CAPACITOR, TANT, 47 UF, 35V, 20%	
74	037-960	C32,72	CAPACITOR, TANT, 150 UF, 15V, 20%	
75	037-968	C55	CAPACITOR, TANT, 6.8 UF, 6V, 20%	
80	038-262	C17,86	CAPACITOR, MYLAR, FOIL, 0.033 UF, 100V, 10%	
81	038-263	C69	CAPACITOR, MYLAR, FOIL, 0.047 UF, 100V, 10%	
82	038-264	C28,70	CAPACITOR, MYLAR, FOIL, 0.068 UF, 100V, 10%	
84	069-025	C74	CAPACITOR, MYLAR, FOIL, 0.027 UF, 100V, 10%	
85	035-816	C67	CAPACITOR, MYLAR, 0.018 UF, 50V, 5%	
86	038-315	C10	CAPACITOR, VAR, 37-250 PF (B426)	(B426)
87	038-307	C11	CAPACITOR, VAR, 170-600 PF (PC4213)	(PC4213)
88	038-308	C79	CAPACITOR, VAR, 70-350 PF (PC428)	(PC428)
90	030-101	C9,29,66,77	CAPACITOR, MON, 0.47 UF, 25V, 20%	
91	030-182	C20,68	CAPACITOR, MON, 0.33 UF, 25V, 20%	
92	030-223	C76	CAPACITOR, MON, 2.2 UF, 25V, 20%	
93	041-408	R10,13,27,45,46, 49-51,60-64,79-81, 122,140-143,148, 150,160,171,180	RESISTOR, COMP, 10K, 1/4W, 5%	
96	058-565	R11,127	RESISTOR, VAR, CER, 10K, 1/2W, 10%	
97	058-566	R3,124	RESISTOR, VAR, CER, 10K, 1/2W, 10%	
				D

ASSEMBLY NO. 1373478 TITLE AUDIO PWA, MODULE NO. 9/10

ITEM NO.	AMPEX PART NO.	REFERENCE NUMBER	DESCRIPTION	JEDEC NO. OR MFR. PART NO.
98	058-564	R57	RESISTOR, VAR, CER, 500 OHM, 1/2W, 10%	
100	058-649	R71	RESISTOR, VAR, CER, 1M, 1/2W, 10%	
101	058-575	R40,159	RESISTOR, VAR, CER, 100K, 1/2W, 10%	
102	058-868	R37	RESISTOR, VAR, CER, 100K, 1/2W, 10%	
103	058-896	R136	RESISTOR, VAR, CER, 10K, 1/2W, 20%	
104	058-897	R21	RESISTOR, VAR, CER, 100K, 1/2W, 20%	
106	041-009	R181	RESISTOR, COMP, 1.8K, 1/2W, 5%	
107	041-528	R170	RESISTOR, COMP, 300 OHM, 1/2W, 5%	
108	041-002	R65,76,77,82,83	RESISTOR, COMP, 10 OHM, 1/2W, 5%	
109	041-283	R42,52,162	RESISTOR, COMP, 47 OHM, 1/2W, 5%	
110	049-360	R168,175	RESISTOR, COMP, 5.1 OHM, 1/2W, 5%	
112	041-095	R53,54	RESISTOR, COMP, 10 OHM, 1W, 5%	
113	041-831	R174	RESISTOR, COMP, 150 OHM, 1W, 5%	
115	041-667	R169,177	RESISTOR, COMP, 10 OHM, 2W, 5%	
118	041-394	R8,107,130,123, 125,132,156,157	RESISTOR, COMP, 100K, 1/4W, 5%	
120	041-409	R5	RESISTOR, COMP, 15K, 1/4W, 5%	
122	041-411	R23,149	RESISTOR, COMP, 47K, 1/4W, 5%	
123	041-406	R100,101	RESISTOR, COMP, 22K, 1/4W, 5%	
124	041-415	R17,19	RESISTOR, COMP, 68K, 1/4W, 5%	
125	041-417	R41,111,112, 120,161	RESISTOR, COMP, 390 OHM, 1/4W, 5%	
126	041-419	R56,72,74	RESISTOR, COMP, 100 OHM, 1/4W, 5%	
127	041-425	R55	RESISTOR, COMP, 47 OHM, 1/4W, 5%	
128	041-427	R34	RESISTOR, COMP, 330 OHM, 1/4W, 5%	
129	041-428	R2,4	RESISTOR, COMP, 470 OHM, 1/4W, 5%	
130	041-429	R86,106	RESISTOR, COMP, 680 OHM, 1/4W, 5%	
131	041-430	R84,85	RESISTOR, COMP, 1.5K, 1/4W, 5%	
132	041-436	R129	RESISTOR, COMP, 18K, 1/4W, 5%	
133	041-440	R73,75	RESISTOR, COMP, 1.2K, 1/4W, 5%	
134	041-442	R167	RESISTOR, COMP, 2.7K, 1/4W, 5%	
135	041-443	R78	RESISTOR, COMP, 39K, 1/4W, 5%	
136	041-484	R14	RESISTOR, COMP, 120K, 1/4W, 5%	
137	041-495	R176	RESISTOR, COMP, 8.2K, 1/4W, 5%	
138	041-504	R59	RESISTOR, COMP, 510 OHM, 1/4W, 5%	
139	041-505	R58	RESISTOR, COMP, 620 OHM, 1/4W, 5%	
140	041-507	R163	RESISTOR, COMP, 5.6K, 1/4W, 5%	
142	041-512	R22,44,153,154, 165	RESISTOR, COMP, 470K, 1/4W, 5%	
143	041-518	R99,128,172	RESISTOR, COMP, 33K, 1/4W, 5%	
144	041-519	R39,164	RESISTOR, COMP, 56K, 1/4W, 5%	
145	041-538	R1,6,7,12,16,28, 29,66,67,95,96, 102,104,105,133, 134,135,137,138, 144,145,146,147	RESISTOR, COMP, 6.2K, 1/4W, 5%	
146	041-539	R31	RESISTOR, COMP, 130 OHM, 1/4W, 5%	D

ASSEMBLY NO. 1373478 TITLE AUDIO PWA, MODULE NO. 9/10

ITEM NO.	AMPEX PART NO.	REFERENCE NUMBER	DESCRIPTION	JEDEC NO. OR MFR. PART NO.
147	041-549	R166	RESISTOR, COMP, 13K, 1/4W, 5%	
148	041-562	R18	RESISTOR, COMP, 43K, 1/4W, 5%	
149	041-568	R30,35	RESISTOR, COMP, 4.7M, 1/4W, 5%	
150	041-569	R68	RESISTOR, COMP, 300 OHM, 1/4W, 5%	
151	041-560	R33,36	RESISTOR, COMP, 2K, 1/4W, 5%	
152	041-570	R173	RESISTOR, COMP, 2.4K, 1/4W, 5%	
153	041-571	R178	RESISTOR, COMP, 3.6K, 1/4W, 5%	
154	041-561	R15	RESISTOR, COMP, 5.1K, 1/4W, 5%	
155	041-612	R20	RESISTOR, COMP, 30K, 1/4W, 5%	
156	041-735	R38	RESISTOR, COMP, 91 OHM, 1/4W, 5%	
157	041-748	R126,139	RESISTOR, COMP, 11K, 1/4W, 5%	
158	041-761	R131	RESISTOR, COMP, 300K, 1/4W, 5%	
159	041-774	R43	RESISTOR, COMP, 1.5M, 1/4W, 5%	
160	041-782	R151,152	RESISTOR, COMP, 3.3M, 1/4W, 5%	
161	041-754	R155	RESISTOR, COMP, 91K, 1/4W, 5%	
162	041-414	R158	RESISTOR, COMP, 2.2K, 1/4W, 5%	
163	041-412	R179	RESISTOR, COMP, 4.7K, 1/4W, 5%	
164	041-410	R9,24,25,26,32, 47,48,69,70,94, 97,98,103,182	RESISTOR, COMP, 1K, 1/4W, 5%	
166	062-564	R115	RESISTOR, MF, 124K, 1/8W, 1%	
167	062-624	R90,91	RESISTOR, MF, 1K, 1/8W, 1%	
168	062-882	R117	RESISTOR, MF, 274 OHM, 1/8W, 1%	
169	062-893	R108	RESISTOR, MF, 392 OHM, 1/8W, 1%	
170	062-977	R118	RESISTOR, MF, 7.5K, 1/8W, 1%	
174	066-009	R114	RESISTOR, MF, 33.2K, 1/8W, 1%	
175	066-014	R87,88,93	RESISTOR, MF, 47.5K, 1/8W, 1%	
176	066-017	R109	RESISTOR, MF, 75K, 1/8W, 1%	
177	066-027	R116	RESISTOR, MF, 274K, 1/8W, 1%	
178	066-029	R110,113	RESISTOR, MF, 357K, 1/8W, 1%	
179	066-034	R89,92	RESISTOR, MF, 475K, 1/8W, 1%	
180	066-923	R121	RESISTOR, MF, 750K, 1/8W, 1%	
181	062-693	R119	RESISTOR, MF, 20K, 1/8W, 1%	
183	120-639	S1,2,3	SWITCH, MINI-TOGGLE, SPDT	
186	540-074	L3,4	INDUCTOR, FXD, 1500 UH, 10%	
187	051-646	L1,2	INDUCTOR, FXD, 2700 UH, 10%	
188	540-055	L5	INDUCTOR, FXD, 10 UH, 10%	
193	581-266	A5	DIODE, LT EMTG, PHOTORES	VTL2C1
195	586-076	A3,4,16,17	INTEGRATED CIRCUIT	SN7410N
196	586-077	A9	INTEGRATED CIRCUIT	SN7420N
197	586-108	A7	INTEGRATED CIRCUIT	SN7474N
198	586-152	A15	INTEGRATED CIRCUIT	MC836P

D

ASSEMBLY NO. 1373478 TITLE AUDIO PWA, MODULE NO. 9/10

ITEM NO.	AMPEX PART NO.	REFERENCE NUMBER	DESCRIPTION	JEDEC NO. OR MFR. PART NO.
199	586-153	A8,24	INTEGRATED CIRCUIT	MC846P
200	586-155	A13	INTEGRATED CIRCUIT	MC862P
201	586-269	A19,21,25,27	INTEGRATED CIRCUIT	UA741C
202	586-283	A10,11	INTEGRATED CIRCUIT	SN7493N
203	586-326	A18	INTEGRATED CIRCUIT	SN7404N
204	586-533	A12	INTEGRATED CIRCUIT	SN74121N
205	586-647	A14	INTEGRATED CIRCUIT	SN74107N
206	587-168	A22,23	INTEGRATED CIRCUIT	CD4016AE
207	587-169	A20	INTEGRATED CIRCUIT	HA2-911-5
208	587-170	A26	INTEGRATED CIRCUIT	HA2-2605-5
209	587-144	A1	INTEGRATED CIRCUIT	F9602
210	587-217	A2	INTEGRATED CIRCUIT	DG200BA
211	587-240	A6	INTEGRATED CIRCUIT	HA2-2625-5
212	143-981	J1,3,8,10-15	JACK, CLOSED ENTRY	
214	280-130		SPACER, XSTR, REF: Q1-3,8,10,12-14,18,19,21-27,31	
217	280-998		SPACER, XSTR, REF: A5,Q4-7,11,15,16,20,30,34	
218	302-395		STRAP, CA, RBR, 1.0 LG	
219	471-062		SCREW, PAN HD, NO. 4-40 X 0.375 LG	
220	471-061		SCREW, PAN HD, NO. 4-40 X 0.312 LG	
222	471-063		SCREW, PAN HD, NO. 4-40 X 0.437 LG	
223	471-325		SCREW, FLAT HD, NO. 4-40 X 0.187 LG	
224	473-325		SCREW, ASSY, NO. 4-40 X 0.312 LG	
226	496-004		NUT, HEX, CAPTIVE WASH, NO. 4-40	
228	501-169		WASHER, FLAT, NO. 4-40	
229	501-729		WASHER, SHLDR	
230	580-648		INSULATOR, MICA	
233	602-012		PLUG, SHORTING, REF: J1,3-8,10-15	

D

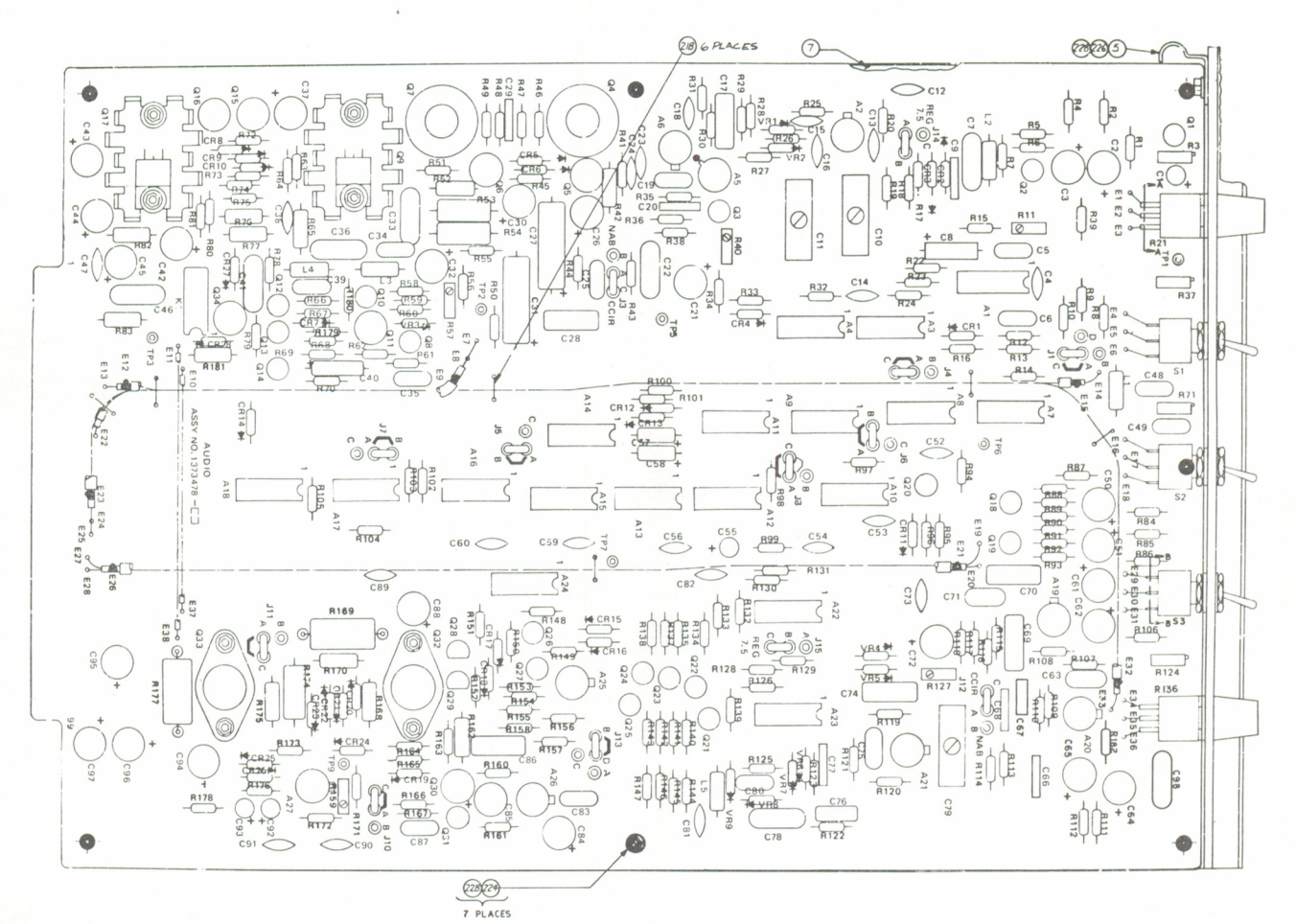

Assembly No. 1373478. Audio PWA, Module No. 9/10

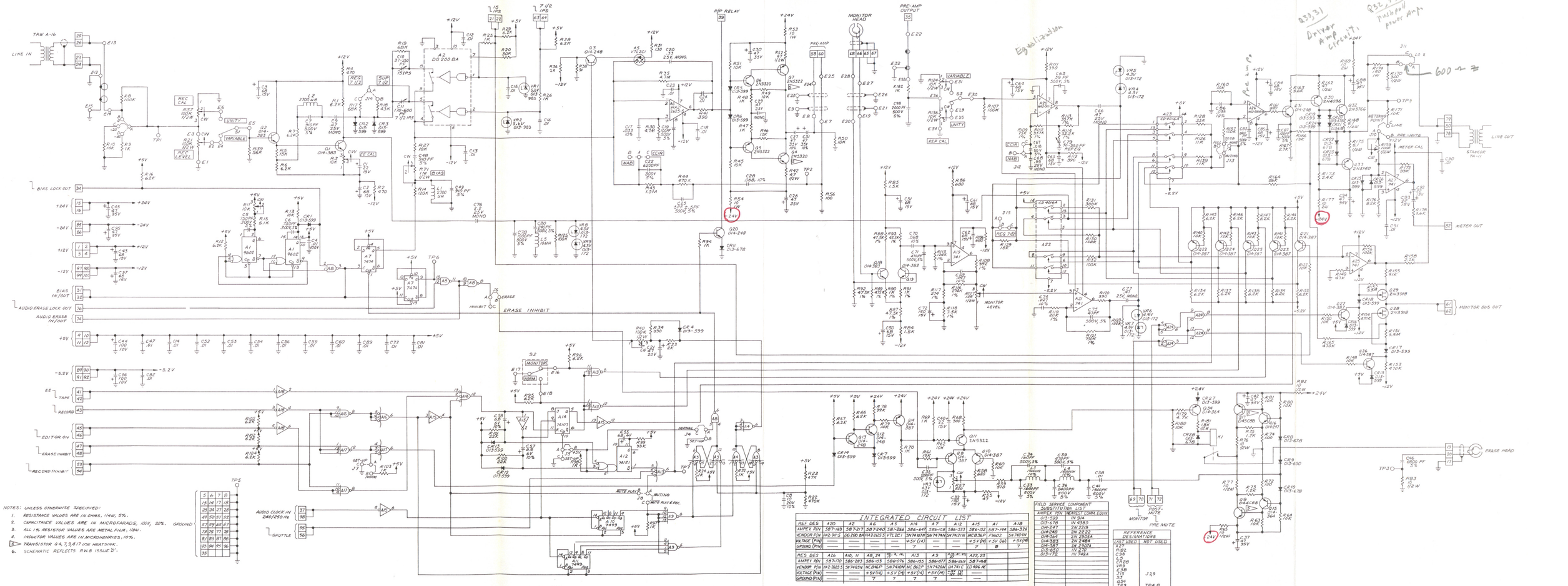

AMPEX 1809178-02

11-89/90

ITEM NO.	AMPEX PART NO.	REFERENCE NUMBER	DESCRIPTION	JEDEC NO. OR MFR. PART NO.
	1373120-03		POWER SUPPLY REGULATOR PWA (NHA 1373036)	
2	1373122		SCHEMATIC	
3	1373227-01		CONTACT, GND	
4	1373272-01		SHIELD, PWB	
5	1373273-06		HANDLE, MDL	
6	1373285-11		OVERLAY	
11	013-257	VR5,6,8,11,13	DIODE	1N753A
12	013-313	VR10	DIODE	1N963B
13	013-332	VR1,2	DIODE	1N750A
14	013-354	VR7	DIODE	1N965B
15	013-357	VR12	DIODE	1/4M1425
16	013-460	VR4	DIODE	1N825A
17	013-677	CR3-6	DIODE, SWITCHING	
18	013-689	CR1,2	DIODE, SWITCHING	FD600
19	581-273	VR3,9	DIODE	1N5350B
20	280-998		PAD, MTG, REF: Q1-22, 24-27	
22	014-247	Q2-5,8,9,12,14	TRANSISTOR	2N2219
23	014-364	Q7,11,17,19,22, 26,27	TRANSISTOR	2N2905A
24	580-166	Q13,16,20,24,25	TRANSISTOR	2N5322
25	580-167	Q1,6,10,15,18,21	TRANSISTOR	2N5320
26	014-755		HEATSINK, XSTR, REF: Q1,6,10,12,15,17,20,24,25	
27	014-832	SCR1,2	THYRISTOR, SCR	
28	030-101	C5,9,14,20,27,31, 39	CAPACITOR, MONO, 0.47 UF, 25V	
29	035-893	C1,3,6,7,11,12,16, 18,21,26,29,32,35, 37	CAPACITOR, MYLAR, 0.1 UF, 25V	
30	037-152	C22,30	CAPACITOR, 82 UF, 50V	
31	037-181	C23,24	CAPACITOR, 47 UF, 35V	
32	037-736	C2,4,8,10,13,15, 19,28,33,34,36,38	CAPACITOR, 22 UF, 35V	
33	037-985	C17,25	CAPACITOR, 15 UF, 20V	
35	041-245	R10,20,23,34,37, 39,49,61,70,79, 95,99-102	RESISTOR, FXD, 1K, 1/2W, 5%	
37	041-282	R14,16,28,30,55, 60,73,76,85	RESISTOR, FXD, 150 OHM, 1/2W, 5%	
38	041-320	R24,38	RESISTOR, FXD, 51 OHM, 1W, 5%	
39	041-329	R1,2,86,87	RESISTOR, FXD, 330 OHM, 1/2W, 5%	
40	041-405	R57,78	RESISTOR, FXD, 1.2K, 1/2W, 5%	
41	041-433	R7,17,31,44,56, 64,74,84,92	RESISTOR, FXD, 27 OHM, 1/2W, 5%	
42	041-475	R58,75,97,98	RESISTOR, FXD, 3K, 1/2W, 5%	
43	042-471	R3,5,13,15,27, 29,54,88,90	RESISTOR, FXD, 100 OHM, 1/4W, 1%	
				K

ASSEMBLY NO. 1373120 TITLE POWER SUPPLY REGULATOR PWA, MODULE NO. 11

ITEM NO.	AMPEX PART NO.	REFERENCE NUMBER	DESCRIPTION	JEDEC NO. OR MFR. PART NO.
44	044-793	R96	RESISTOR, VAR, 200 OHM, 1W, 10%	
46	048-257	R19,33,42,52,69	RESISTOR, FXD, 3.01K, 1/4W, 1%	
47	048-259	R9,21,35,48,67, 80,94	RESISTOR, FXD, 1K, 1/4W, 1%	
48	048-618	R47,66	RESISTOR, FXD, 2K, 1/4W, 1%	
49	048-624	R45	RESISTOR, FXD, 182 OHM, 1/4W, 1%	
50	048-625	R46,68	RESISTOR, FXD, 150 OHM, 1/4W, 1%	
51	048-654	R41,43	RESISTOR, FXD, 909 OHM, 1/4W, 1%	
52	048-715	R63	RESISTOR, FXD, 536 OHM, 1/4W, 1%	
53	048-727	R22,36,82	RESISTOR, FXD, 499 OHM, 1/4W, 1%	
54	048-751	R50,51,71,72	RESISTOR, FXD, 6.04K, 1/4W, 1%	
55	048-770	R8,93	RESISTOR, FXD, 3.09K, 1/4W, 1%	
56	057-870	R11,12	RESISTOR, FXD, 187 OHM, 1/4W, 1%	
57	062-253	R81	RESISTOR, FXD, 649 OHM, 1/4W, 1%	
58	062-389	R4,6,53,89,91	RESISTOR, FXD, 432 OHM, 1/4W, 1%	
59	062-494	R59,65,77	RESISTOR, FXD, 178 OHM, 1/4W, 1%	
60	062-689	R18,32,83	RESISTOR, FXD, 698 OHM, 1/4W, 1%	
61	066-888	R25,26	RESISTOR, FXD, 66.5 OHM, 1/4W, 1%	
62	1374157-10	R40,62	RESISTOR, PAIR, 6.04K, 1/4W, 0.1%	
65	148-028	TP1-10	CONNECTOR, TIP JACK, WHT	
66	471-325		SCREW, FH, NO. 4-40 X 0.187 LG	
67	473-325		SCREW, MACH, ASSEM WASH, NO. 4	
68	496-004		NUT, ASSEM, NO. 4	
69	501-169		WASHER, SM, NO. 4	
71	586-269	A1-9	INTEGRATED CIRCUIT	UA741C
72	250-188		BUMPER, PAD, RBR, ADH BACK	

K

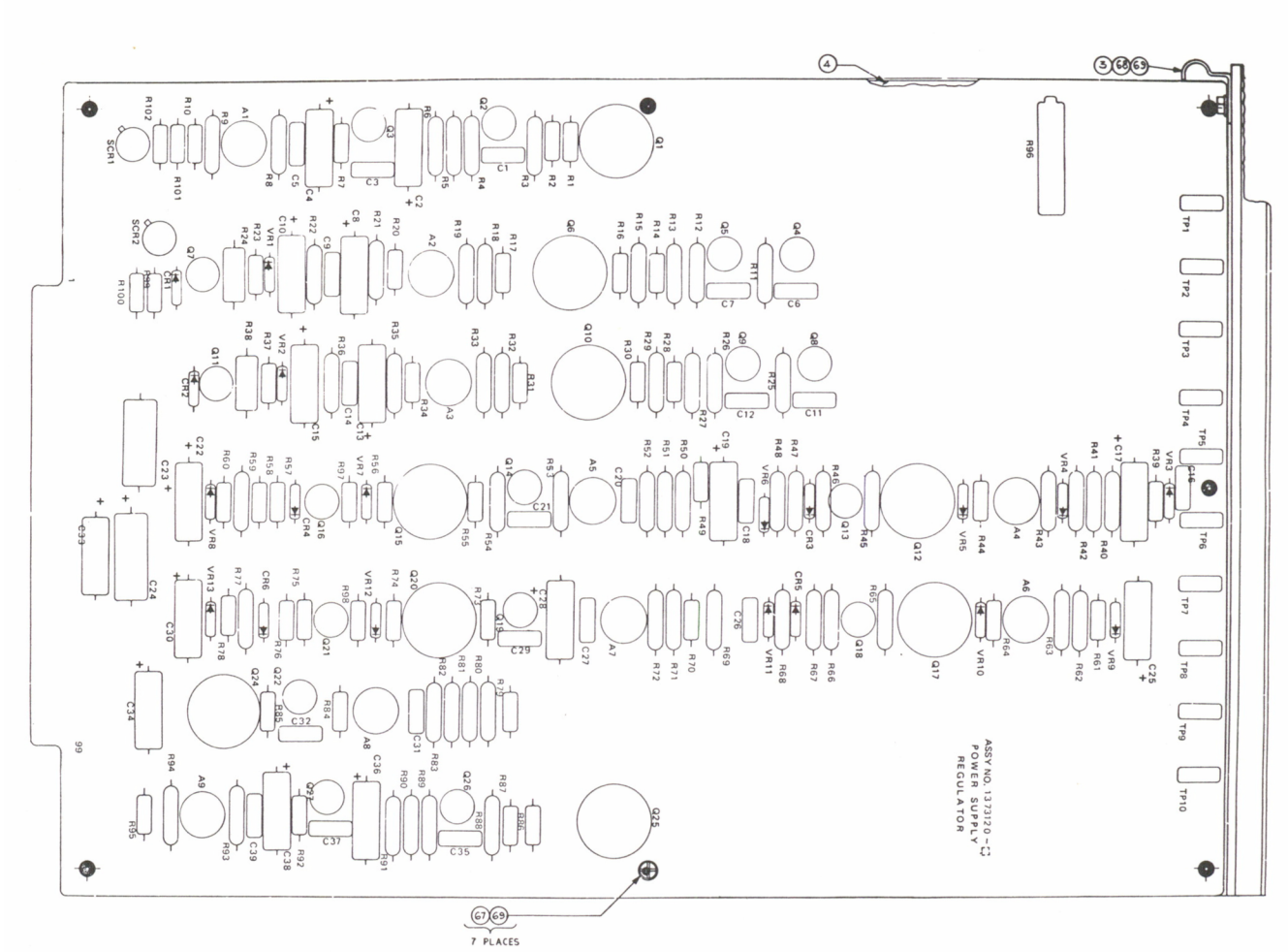

Assembly No. 1373120. Power Supply Regulator PWA, Module No. 11

(For Schematic, Refer to Page 9-3)

ITEM NO.	AMPEX PART NO.	REFERENCE NUMBER	DESCRIPTION	JEDEC NO. OR MFR. PART NO.
	1373147-07		MODULATOR PWA, NTSC/PAL-M, HIGH BAND (NHA 1373039)	
	1373147-08		MODULATOR PWA, PAL/SECAM, HIGH BAND (NHA 1373039)	
	1373147-09		MODULATOR PWA, LOW BAND COLOR (NHA 1373039)	
2	1373149		SCHEMATIC, HIGH BAND	
3	1373272-01		SHIELD, PWB	
4	1373191-01		SHIELD, TOP	
5	1373273-13		HANDLE, MODULE	
6	1373227-01		CONTACT, GROUND	
7	1373285-12		OVERLAY	
9	1375297		SCHEMATIC, LOW BAND COLOR	
11	030-057	C19,43,44,50-53, 62,64	CAPACITOR, CER DISC, 0.01 UF, 100V, 20%	
12	030-223	C27	CAPACITOR, MONO, 2.2 UF, 25V, 20%	
15	034-180	C15	CAPACITOR, MICA, 39 PF, 500V, 5%	
16	034-182	C35,37	CAPACITOR, MICA, 56 PF, 500V, 5%	
17	034-289	C17	CAPACITOR, MICA, 1200 PF, 500V, 5%	
18	034-184	C34	CAPACITOR, MICA, 68 PF, 500V, 5% (LOW BAND COLOR)	
19	034-388	C7	CAPACITOR, MICA, 3300 PF, 500V, 5%	
20	034-326	C34	CAPACITOR, MICA, 750 PF, 500V, 5% (HIGH BAND)	
21	034-931	C20	CAPACITOR, MICA, 560 PF, 300V, 5%	
22	034-939	C38	CAPACITOR, MICA, 91 PF, 500V, 5%	
23	034-935	C5	CAPACITOR, MICA, 240 PF, 500V, 5%	
24	034-941	C45,63	CAPACITOR, MICA, 51 PF, 500V, 5%	
25	034-950	C40,54,65,75,76	CAPACITOR, MICA, 1000 PF, 100V, 5%	
26	034-961	C39	CAPACITOR, MICA, 120 PF, 500V, 5%	
27	034-962	C28,29	CAPACITOR, MICA, 33 PF, 500V, 5%	
28	034-963	C2	CAPACITOR, MICA, 15 PF, 500V, 5%	
29	034-970	C8	CAPACITOR, MICA, 1500 PF, 500V, 5%	
30	034-779	C26	CAPACITOR, MICA, 1471 PF, 500V, 0.5% (HIGH BAND)	
31	034-930	C13	CAPACITOR, MICA, 680 PF, 300V, 5%	
32	035-734	C21,30,68,77	CAPACITOR, MYLAR, 0.01 UF, 50V, 5%	
33	035-828	C4,6	CAPACITOR, MYLAR, 0.022 UF, 50V, 5%	
34	035-893	C16,18,24,25,31, 32,33,41,42,46, 47-49,56,59,66, 69,71,78	CAPACITOR, MYLAR, 0.1 UF, 50V, 5%	
36	037-767	C26	CAPACITOR, MICA, 138.3 PF, 500V, 0.5% (LOW BAND COLOR)	
38	037-164	C1,14,57,58,79, 80	CAPACITOR, TANT, 1 UF, 35V, 10%	
39	037-186	C11,83	CAPACITOR, TANT, 120 UF, 10V, 10%	
40	037-380	C3	CAPACITOR, NP, FOIL, 400 UF, 6V, -15 +25%	
41	037-507	C72	CAPACITOR, TANT, 150 UF, 15V, 10%	
42	037-736	C82	CAPACITOR, TANT, 22 UF, 35V, 10%	
43	037-746	C12,36,74,84	CAPACITOR, TANT, 47 UF, 20V, 10%	
44	037-985	C22,23,60	CAPACITOR, TANT, 15 UF, 20V, 10%	
45	037-991	C70,73	CAPACITOR, TANT, 22 UF, 15V, 10%	
				J

ASSEMBLY NO. 1373147 TITLE MODULATOR PWA, MODULE NO. 12

ITEM NO.	AMPEX PART NO.	REFERENCE NUMBER	DESCRIPTION	JEDEC NO. OR MFR. PART NO.
46	030-094	C61,81	CAPACITOR, MONO, 1 UF, 25V, 20%	
48	055-166	C85	CAPACITOR, MYLAR, 0.001 UF, 50V, 5%	
49	038-305	C55	CAPACITOR, VAR, 5-30 PF, 50V	
50	030-956	C67	CAPACITOR, CER, 50 PF, 200V	
51	056-177	C9,10	CAPACITOR, MICA, 4700 PF, 500V, 5%	
53	017-057	Y1	CRYSTAL, 7.8 MHZ (PAL/SECAM)	
54	017-058	Y1	CRYSTAL, 7.9 MHZ (NTSC, PAL-M)	
55	017-063	Y1	CRYSTAL, 5.786 (LOW BAND COLOR)	
57	013-689	CR1-4	DIODE	FD600
58	013-723	CR5,7-9	DIODE	FD777
59	013-830	VR1	DIODE	1N966B
60	581-029	CR6	DIODE, TUNNEL	2N4754A
63	051-281	L1	INDUCTOR, FIXED, 0.1 UH, 20%	
65	540-004	L4	INDUCTOR, FIXED, 33 UH, 5%	
66	540-014	L3	INDUCTOR, FIXED, 15 UH, 10%	
67	540-071	L6	INDUCTOR, FIXED, 120 UH, 5%	
68	051-928	L5	INDUCTOR, FIXED, 75 UH	
69	051-605	L2	INDUCTOR, VAR, 0.6 UH – 0.87 UH	
71	586-124	A1,2	INTEGRATED CIRCUIT	UA710
72	586-168	A7	INTEGRATED CIRCUIT	SN74H00N
73	586-249	A10,15	INTEGRATED CIRCUIT	CA3028A
74	586-253	A17,20	INTEGRATED CIRCUIT	CA3006
75	586-255	A5	INTEGRATED CIRCUIT	CA3019
76	586-269	A6,11	INTEGRATED CIRCUIT	UA741
77	586-274	A19	INTEGRATED CIRCUIT	MC844P
78	586-309	A4	INTEGRATED CIRCUIT	F9601
79	586-488	A12,13,16	INTEGRATED CIRCUIT	MC1235L
80	586-489	A14	INTEGRATED CIRCUIT	MC1204L
81	586-533	A3,9	INTEGRATED CIRCUIT	F74121
82	586-700	A8	INTEGRATED CIRCUIT	F74H74
83	1368516-01	A18	INTEGRATED CIRCUIT, SELECTED	MC1227L
86	041-002	R18	RESISTOR, COMP, 10 OHM, 1/2W, 5%	
87	041-003	R66,74,184	RESISTOR, COMP, 100 OHM, 1/2W, 5%	
88	041-006	R31,53,60,123	RESISTOR, COMP, 620 OHM, 1/2W, 5%	
89	041-008	R34,147,178,193	RESISTOR, COMP, 1.5K, 1/2W, 5%	
90	041-009	R42	RESISTOR, COMP, 1.8K, 1/2W, 5%	
91	041-010	R40,50,58,70,78, 80,82,96,118,168, 170,171	RESISTOR, COMP, 2K, 1/2W, 5%	
92	041-013	R104	RESISTOR, COMP, 4.7K, 1/2W, 5%	
93	041-014	R11,13,24,37	RESISTOR, COMP, 10K, 1/2W, 5%	
94	041-017	R9	RESISTOR, COMP, 33K, 1/2W, 5%	
95	041-023	R75-77	RESISTOR, COMP, 100K, 1/2W, 5%	
96	041-245	R6,12,14,41,44, 62,67,85,88,102, 115,119,129,130, 132,139,183	RESISTOR, COMP, 1K, 1/2W, 5%	J

ASSEMBLY NO. 1373147 TITLE MODULATOR PWA, MODULE NO. 12

ITEM NO.	AMPEX PART NO.	REFERENCE NUMBER	DESCRIPTION	JEDEC NO. OR MFR. PART NO.
97	041-256	R51,151	RESISTOR, COMP, 560 OHM, 1/2W, 5%	
98	041-273	R45	RESISTOR, COMP, 270 OHM, 1/2W, 5%	
99	041-282	R47,69	RESISTOR, COMP, 150 OHM, 1/2W, 5%	
100	041-283	R21,25,36,39,84,90, 95,98,109,121, 122,125,145,146, 188,189	RESISTOR, COMP, 47 OHM, 1/2W, 5%	
102	041-329	R192	RESISTOR, COMP, 330 OHM, 1/2W, 5%	
103	041-330	R57,79,105,169	RESISTOR, COMP, 6.8K, 1/2W, 5%	
104	041-336	R30,54,152	RESISTOR, COMP, 470 OHM, 1/2W, 5%	
105	041-357	R38,81,106	RESISTOR, COMP, 5.6K, 1/2W, 5%	
106	041-361	R22,103	RESISTOR, COMP, 7.5K, 1/2W, 5%	
107	041-379	R46,166	RESISTOR, COMP, 430 OHM, 1/2W, 5%	
108	041-384	R3	RESISTOR, COMP, 68 OHM, 1/2W, 5%	
109	041-404	R55	RESISTOR, COMP, 510 OHM, 1/2W, 5%	
110	041-409	R181	RESISTOR, COMP, 15K, 1/4W, 5%	
111	041-410	R163	RESISTOR, COMP, 1K, 1/4W, 5%	
112	041-413	R137	RESISTOR, COMP, 6.8K, 1/4W, 5%	
113	041-418	R140	RESISTOR, COMP, 22 OHM, 1/4W, 5%	
114	041-419	R113,172	RESISTOR, COMP, 100 OHM, 1/4W, 5%	
115	041-420	R196	RESISTOR, COMP, 12K, 1/2W, 5%	
116	041-425	R117,138	RESISTOR, COMP, 47 OHM, 1/4W, 5%	
117	041-427	R136	RESISTOR, COMP, 330 OHM, 1/4W, 5%	
118	041-454	R32	RESISTOR, COMP, 39 OHM, 1/2W, 5%	
119	041-462	R52,59,61	RESISTOR, COMP, 1.3K, 1/2W, 5%	
120	041-473	R120	RESISTOR, COMP, 240 OHM, 1/2W, 5%	
121	041-475	R4,20,33,100, 148,149,194,195	RESISTOR, COMP, 3K, 1/2W, 5%	
122	041-482	R154	RESISTOR, COMP, 12K, 1/4W, 5%	
123	041-485	R107,126	RESISTOR, COMP, 16 OHM, 1/2W, 5%	
124	041-496	R162	RESISTOR, COMP, 10 OHM, 1/4W, 5%	
125	041-516	R8	RESISTOR, COMP, 75 OHM, 1/2W, 5%	
126	041-547	R177	RESISTOR, COMP, 18 OHM, 1/4W, 5%	
127	041-561	R167	RESISTOR, COMP, 5.1K, 1/4W, 5%	
128	041-999	R72	RESISTOR, COMP, 560 OHM, 1W, 5%	
129	041-740	R156	RESISTOR, COMP, 200 OHM, 1/4W, 5%	
130	057-791	R71	RESISTOR, MF, 1.74K, 1/4W, 1% (LOW BAND COLOR)	
131	042-471	R110	RESISTOR, MF, 100 OHM, 1/4W, 1%	
132	048-458	R68	RESISTOR, MF, 200 OHM, 1/2W, 1% (PAL/SECAM)	
133	041-548	R23	RESISTOR, COMP, 130 OHM, 1/2W, 5%	
134	041-780	R198	RESISTOR, COMP, 2.7M, 1/4W, 5%	
135	060-492	R71	RESISTOR, MF, 408 OHM, 1/4W, 0.25% (HIGH BAND)	
136	048-257	R73	RESISTOR, MF, 3.01K, 1/4W, 1%	
137	048-259	R89,101,180	RESISTOR, MF, 1K, 1/4W, 1% (NTSC, PAL-M)	
138	048-259	R89,180	RESISTOR, MF, 1K, 1/4W, 1% (PAL/SECAM, LOW BAND COLOR)	
139	048-618	R141,179	RESISTOR, MF, 2K, 1/4W, 1%	J

ASSEMBLY NO. 1373147 TITLE MODULATOR PWA, MODULE NO. 12

ITEM NO.	AMPEX PART NO.	REFERENCE NUMBER	DESCRIPTION	JEDEC NO. OR MFR. PART NO.
140	048-619	R48,49	RESISTOR, MF, 2.49K, 1/4W, 1%	
141	048-625	R29,29	RESISTOR, MF, 150 OHM, 1/4W, 1%	
142	048-671	R128	RESISTOR, MF, 422 OHM, 1/4W, 1% (PAL/SECAM)	
143	048-672	R7	RESISTOR, MF, 332 OHM, 1/4W, 1%	
144	048-674	R127	RESISTOR, MF, 2.15K, 1/4W, 1%	
145	048-712	R150,153,190, 191	RESISTOR, MF, 75 OHM, 1/4W, 1%	
146	048-727	R15,93	RESISTOR, MF, 499 OHM, 1/4W, 1%	
147	048-743	R165	RESISTOR, MF, 1.1K, 1/4W, 1%	
148	048-744	R91	RESISTOR, MF, 1.15K, 1/4W, 1%	
149	048-751	R108,124	RESISTOR, MF, 6.04K, 1/4W, 1%	
150	048-794	R64,114,131	RESISTOR, MF, 1K, 1/2W, 1%	
151	048-823	R99	RESISTOR, MF, 2K, 1/2W, 1%	
152	048-952	R2	RESISTOR, MF, 154 OHM, 1/4W, 1%	
153	048-953	R1,26,135	RESISTOR, MF, 249 OHM, 1/4W, 1%	
154	049-360	R5	RESISTOR, COMP, 5.1 OHM, 1/2W, 5%	
155	049-363	R112	RESISTOR, COMP, 30 OHM, 1/4W, 5%	
156	062-256	R101	RESISTOR, MF, 1.27K, 1/4W, 1% (LOW BAND COLOR)	
157	057-982	R197	RESISTOR, MF, 4.12K, 1/4W, 1% (LOW BAND COLOR)	
158	057-173	R17,19	RESISTOR, MF, 5.62K, 1/4W, 1%	
159	057-195	R133,155,182	RESISTOR, MF, 100 OHM, 1/8W, 1%	
160	057-426	R35	RESISTOR, MF, 76.8 OHM, 1/4W, 1%	
161	057-607	R176	RESISTOR, MF, 3.83K, 1/8W, 1%	
162	057-631	R63	RESISTOR, MF, 3.16K, 1/2W, 1%	
163	057-670	R27	RESISTOR, MF, 12.4K, 1/4W, 1% (NTSC, PAL-M, LOW BAND COLOR)	
164	057-670	R27,92	RESISTOR, MF, 12.4K, 1/4W, 1% (PAL/SECAM)	
165	048-704	R68	RESISTOR, MF, 301 OHM, 1/4W, 1% (NTSC, PAL-M, LOW BAND COLOR)	
166	057-678	R101	RESISTOR, MF, 750 OHM, 1/4W, 1% (PAL/SECAM)	
167	048-715	R86	RESISTOR, MF, 536 OHM, 1/4W, 1% (LOW BAND COLOR)	
168	048-662	R94,111	RESISTOR, MF, 3.74K, 1/4W, 1%	
169	057-910	R86,128	RESISTOR, MF, 549 OHM, 1/4W, 1% (NTSC, PAL-M)	
170	057-910	R86	RESISTOR, MF, 549 OHM, 1/4W, 1% (PAL/SECAM)	
171	058-277	R97	RESISTOR, VAR, 500 OHM, 1W, WW	
173	058-592	R65	RESISTOR, VAR, 2K, 1W	
174	058-474	R43	RESISTOR, VAR, CARBON, 500 OHM, 1/2W	
175	058-564	R56	RESISTOR, VAR, CERMET, 500 OHM, 1/2W	
176	062-040	R160	THERMISTOR, 470 OHM, 1/8W, 10%	
177	062-257	R142,187	RESISTOR, MF, 1.33K, 1/4W, 1%	
179	062-417	R116	RESISTOR, MF, 309 OHM, 1/2W, 1%	
180	062-422	R134	RESISTOR, MF, 3.16K, 1/8W, 1%	
181	062-423	R158,174	RESISTOR, MF, 26.7 OHM, 1/8W, 1%	
182	062-424	R173,175	RESISTOR, MF, 47.5 OHM, 1/8W, 1%	
183	062-425	R161	RESISTOR, MF, 49.9 OHM, 1/8W, 1%	
184	062-654	R164	RESISTOR, MF, 1.07K, 1/8W, 1%	
185	062-688	R83	RESISTOR, MF, 348 OHM, 1/4W, 1%	J

ASSEMBLY NO. 1373147 TITLE MODULATOR PWA, MODULE NO. 12

ITEM NO.	AMPEX PART NO.	REFERENCE NUMBER	DESCRIPTION	JEDEC NO. OR MFR. PART NO.
186	062-547	R159	RESISTOR, MF, 348 OHM, 1/8W, 1%	
187	057-910	R128	RESISTOR, MF, 549 OHM, 1/4W, 1% (LOW BAND COLOR)	
188	062-393	R87	RESISTOR, MF, 825 OHM, 1/4W, 1% (HIGH BAND)	
189	062-418	R157	RESISTOR, MF, 309 OHM, 1/4W, 1%	
190	048-256	R87	RESISTOR, MF, 3.48K, 1/4W, 1% (LOW BAND COLOR)	
191	060-490	R16	RESISTOR, MF, 165 OHM, 1/4W, 1%	
192	060-491	R70	RESISTOR, MF, 266 OHM, 1/4W, 0.25% (HIGH BAND)	
193	066-786	R92	RESISTOR, MF, 7.68K, 1/4W, 1% (NTSC, PAL-M, LOW BAND COLOR)	
194	057-516	R143,144,185, 186	RESISTOR, MF, 154 OHM, 1/8W, 1%	
195	062-354	R70	RESISTOR, MF, 255 OHM, 1/4W, 1% (LOW BAND COLOR)	
196	014-248	Q16	TRANSISTOR	2N2222
197	014-364	Q12	TRANSISTOR	2N2905A
198	014-505	Q1-3,8-10,13-15, 17,18,22,23,25, 27,32,33,36,43,45	TRANSISTOR	2N3251
199	014-506	Q4,6,7,11,20,21, 26,28,30,31,37, 47	TRANSISTOR	2N2501
200	014-581	Q34,35,40,41,46, 49	TRANSISTOR	2N2369A
201	014-738	Q42	TRANSISTOR	2N4260
202	014-852	Q5	TRANSISTOR	MD2369A
203	580-133	Q19,24	TRANSISTOR	2N4093
204	580-292	Q38	TRANSISTOR, DUAL	
205	580-511	Q29,39,44,48	TRANSISTOR	2N5841
209	014-366		HEATSINK, XSTR, T0-18, REF: Q2,3,13,23,27	
210	143-981		JACK, PC TIP, REF: J1-A,B,C,J2-A,B,C,J3	
213	014-712		SPACER, DUAL, XSTR, REF: Q5	
214	014-783		SPACER, DUAL, XSTR, REF: Q38	
215	280-130		SPACER, XSTR, T0-18, REF: Q1,3,6-11,13-28,30-37,39-41,43,45-47,49	
218	280-998		SPACER, XSTR, T0-5, REF: Q12	
220	103307-01		SPACER, 0.25 LG, REF: Q38	
221	602-012	J1-3	PLUG, SHORTING, RED	
223	6000001-20		KNOB	
224	250-188		BUMPER, PAD	
227	302-395		STRAP, CABLE	
228	119-259	S1	SWITCH, TOGGLE, LEVER-LOCK	
230	932-034		BEAD, FERRITE, 1/4 IN, REF: Q38	
234	501-169		WASHER, PLAIN, NO. 4	
235	473-365		SCREW, XREC, FLAT HD, 100°C/SK NO. 2-56 X 0.188 LG	
236	473-325		SCREW, XREC, PAN HD, NO. 4-40 X 0.312 LG	
237	471-325		SCREW, FH, NO. 4-40 X 0.188 LG	
238	496-004		NUT, ASSEM, NO. 4	
243	471-060		SCREW, PAN HD, NO. 4-40 X 0.250 LG	
244	502-024		WASHER, INT TOOTH, NO. 4	
246	932-035		BEAD, FERRITE, 1/8 IN, REF: Q2,4,20,29,38,42,44,48	J

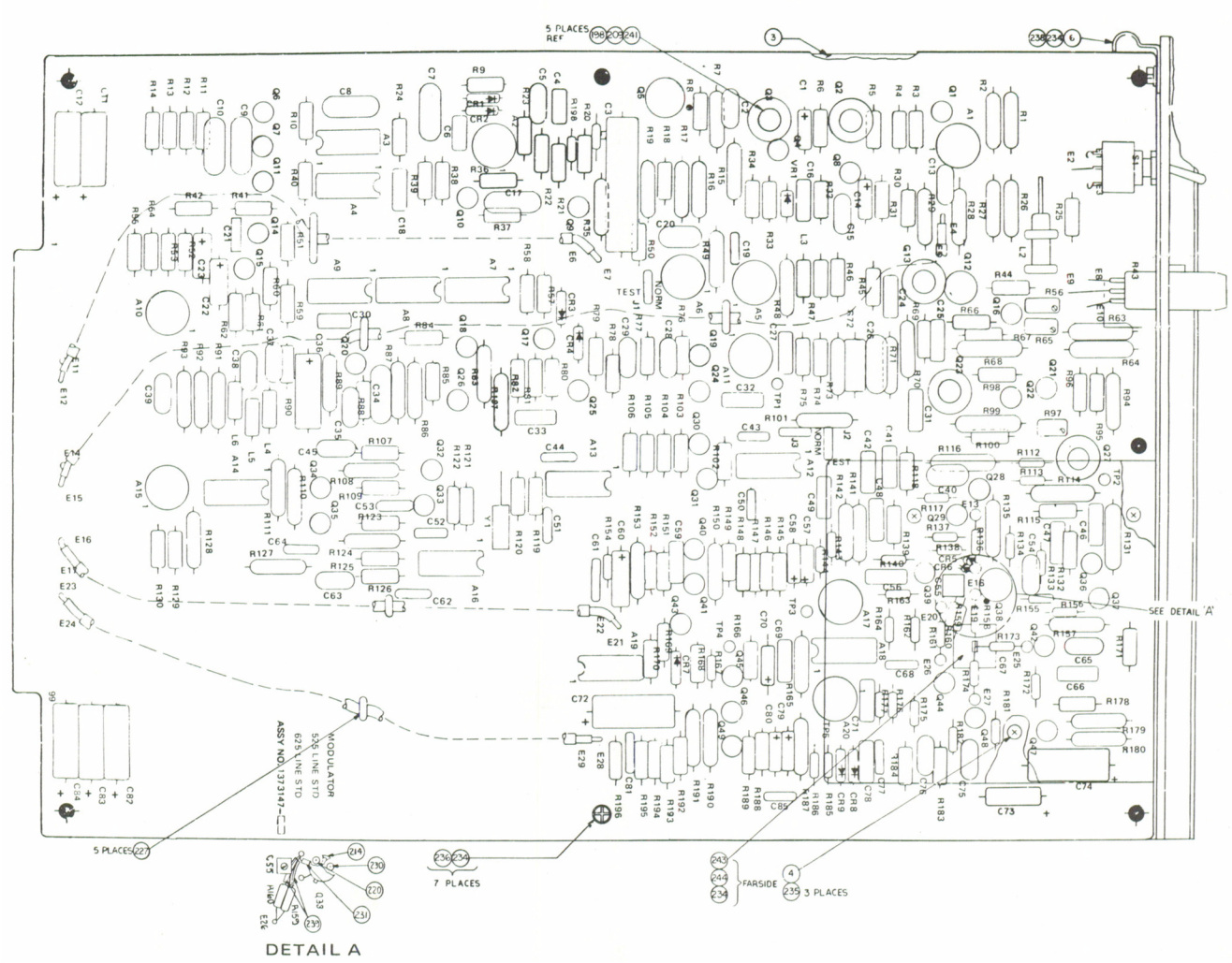

Assembly No. 1373147. Modulator PWA, Module No. 12

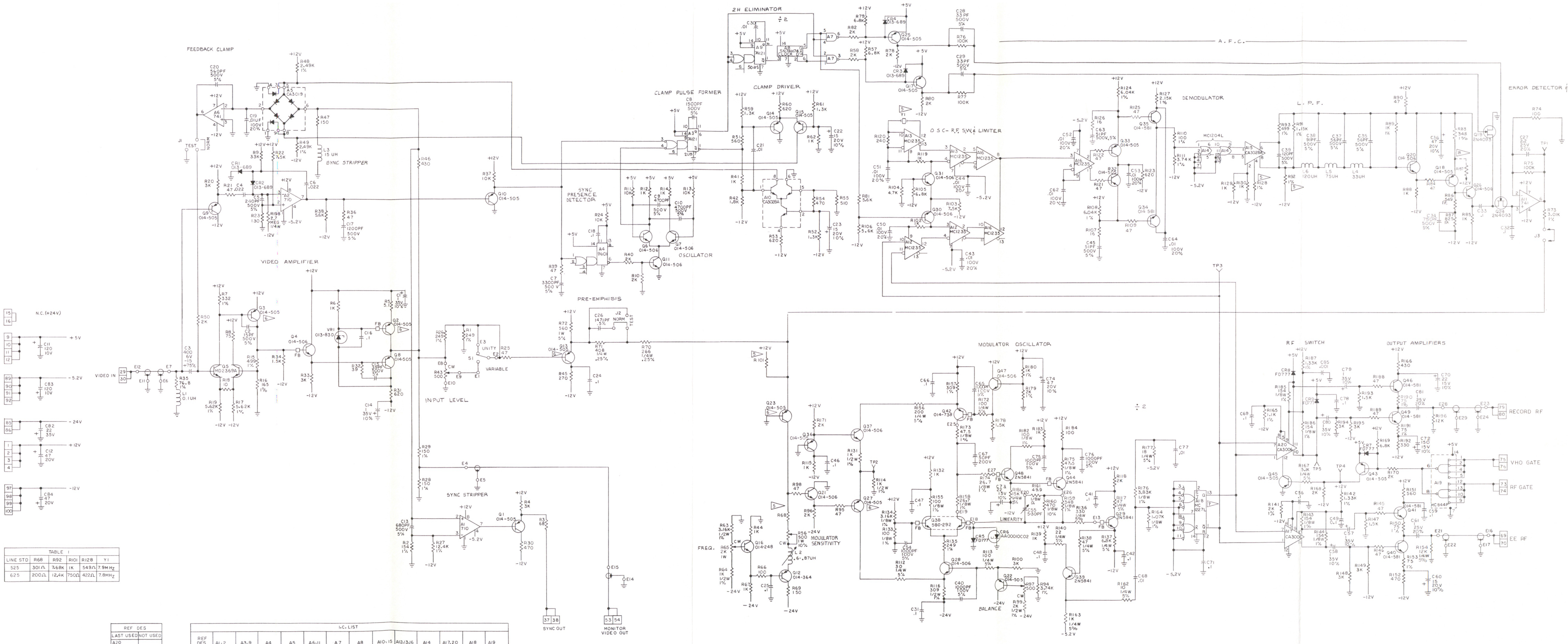

TABLE 1					
LINE STD	R68	R92	R101	R128	Y1
525	301Ω	7.68K	1K	549Ω	7.9MHz
625	200Ω	12.4K	750Ω	422Ω	7.8MHz

NOTES UNLESS OTHERWISE SPECIFIED
1. CAPACITANCE VALUES ARE IN MICROFARADS, 50V, 5%.
2. RESISTANCE VALUES ARE IN OHMS, 1/2W, 5%.
3. 1% RESISTOR ARE METAL FILM 1/4W
4. UNUSED PWB PINS ARE GROUND.
5. SEE TABLE "1" FOR LINE STD COMPONENTS.
6. USE ITEM 209 HEATSINK.
7. SELECTED PART, AMPEX PART NO. 1368516-01, VENDOR P/N MC1227L.
8. FOR FUTURE DESIGN

REF DES	
LAST USED	NOT USED
A20 C85 CR9 E29 L6 Q49 R198 TP5 Y1	

I.C. LIST													
REF DES	A1,2	A3,9	A4	A5	A6,11	A7	A8	A10,15	A12,13,16	A14	A17,20	A18	A19
AMPEX P/N	586-124	586-533	586-309	586-255	586-269	586-168	586-700	586-249	586-488	586-489	586-253	1368516-01	586-274
VENDOR P/N	μA710	F74121	F9601	CA3019	μA741	SN74H00	F74H74	CA3028A	MC1235	MC1204	CA3006	MC1227L	MC844P
VOLTAGE PIN	(8 +12V)	14(+5V)	14(+5V)			14(+5V)	14(+5V)		7(-5.2V)	7(-5.2V)			14(+5V)
GND PIN	1	7	7			7	7		14	14		14	7

(A)

Schematic No. 1373149.
Modulator PWA, High Band,
Module No. 12

AMPEX 1809178-02

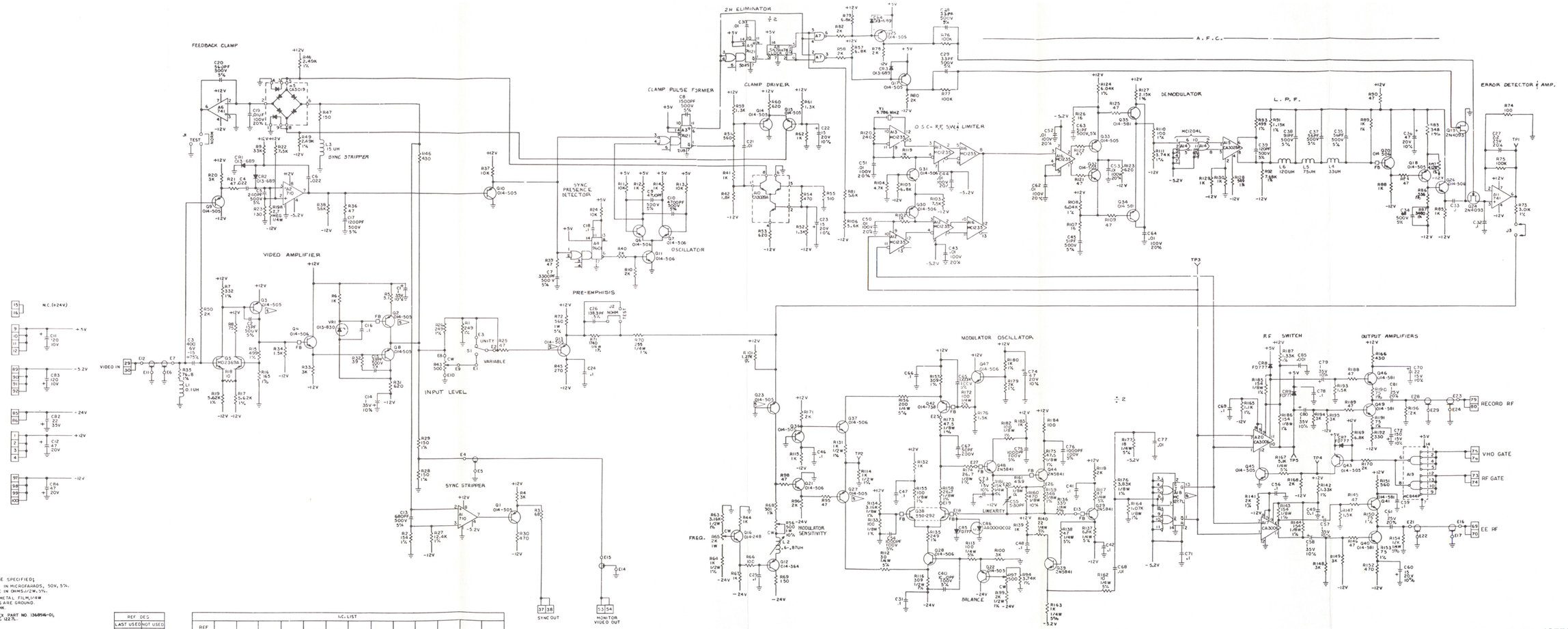

NOTES UNLESS OTHERWISE SPECIFIED:
1. CAPACITANCE VALUES ARE IN MICROFARADS, 50V, 5%.
2. RESISTANCE VALUES ARE IN OHMS, 1/2W, 5%.
3. 1% RESISTORS ARE METAL FILM, 1/4W.
4. UNUSED PWB PINS ARE GROUND.
5. USE ITEM 209 HEATSINK.
6. SELECTED PART, AMPEX PART NO. 1360516-01, VENDOR PART NO. NC-122 T.

REF DES	
LAST USED	NOT USED
A30	
C83	
C93	
L7	
L49	
R198	
TP5	
Y1	

I.C. LIST													
REF DES	A1-2	A3-9	A4	A5	A6-11	A7	A8	A10-15	A12-3,6	A14	A17,20	A18	A19
AMPEX P/N	586-164	586-533	586-309	586-255	586-269	586-168	586-700	586-249	586-488	586-489	586-253	360516-01	586-274
MOTOR P/N	UA 710	F 74121	F 9601	CA3019	UA741	SN74H00	F74H 74	CA3028A	MC1733	MC1204	CA3006	MC1027L	MC844P
VOLTAGE PIN	B +12V	14(+5V)	14(+5V)			14(+5V)	14(+5V)		7(-5.2V)	7(-5.2V)			14(+5V)
GND PIN	1	7	7			7	7		14	14		14	7

AMPEX 1809178-02

Schematic No. 1375297.
Modulator PWA, Low Band Color,
Module No. 12

11-103/104

ITEM NO.	AMPEX PART NO.	REFERENCE NUMBER	DESCRIPTION	JEDEC NO. OR MFR. PART NO.
	1373153-04		MONITOR SWITCH LOGIC AND COLOR FRAMING DETECTOR PWA	
2	1373155		SCHEMATIC	
5	1373285-13		OVERLAY, MDL	
6	1373272-01		SHIELD, PWB	
7	1373273-01		HANDLE, MDL	
8	1373227-01		CONTACT, GND	
9	471-325		SCREW, FLAT HD, NO. 4-40 X 0.187	
10	473-325		SCREW, MACH, ASSY, NO. 4-40 X 0.312	
11	496-004		NUT, ASSEM, NO. 4	
12	501-169		WASHER, PLAIN, NO. 4	
13	013-689	CR1-10,12-26	DIODE	FD600
15	013-830	VR1-3	DIODE, ZENER	1N966B
16	014-505	Q1,2,5,6,9,15,17, 18,26,27,32,33, 35-47,66,69,70, 72,73,74	TRANSISTOR	2N3251
17	014-247	Q10	TRANSISTOR	2N2219
18	014-364	Q29	TRANSISTOR	2N2905A
20	014-506	Q3,4,7,8,16,19, 20,28,30,31,64, 65,67,68,71	TRANSISTOR	2N2501
21	014-597	Q21	TRANSISTOR, DUAL	
23	580-133	Q11,12,13,22-25, 48,49,51-63,75	TRANSISTOR	2N4093
24	030-057	C1,5,6,17,21,37,38	CAPACITOR, CER, DISC, 0.01 UF, 100V, 20%	
25	030-094	C15,19	CAPACITOR, MONO, 1 UF, 25V, 20%	
26	030-101	C10	CAPACITOR, MONO, 0.47 UF, 25V, 20%	
27	030-182	C50	CAPACITOR, MONO, 0.33 UF, 25V, 20%	
28	030-095	C49	CAPACITOR, MONO, 0.1 UF, 25V, 20%	
29	030-223	C16	CAPACITOR, MONO, 2.2 UF, 25V, 20%	
31	034-153	C36	CAPACITOR, MICA, 1000 PF, 500V, 5%	
32	034-156	C41	CAPACITOR, MICA, 5 PF, 500V, 5%	
33	034-180	C11,43,45	CAPACITOR, MICA, 39 PF, 500V, 5%	
34	034-182	C32	CAPACITOR, MICA, 56 PF, 500V, 5%	
35	034-185	C22,23	CAPACITOR, MICA, 75 PF, 500V, 5%	
36	034-240	C40	CAPACITOR, MICA, 220 PF, 500V, 5%	
39	034-283	C35	CAPACITOR, MICA, 820 PF, 300V, 5%	
40	034-940	C28,29	CAPACITOR, MICA, 82 PF, 300V, 5%	
41	034-962	C31	CAPACITOR, MICA, 33 PF, 300V, 5%	
42	056-177	C34	CAPACITOR, MICA, 4700 PF, 500V, 5%	
44	035-734	C2	CAPACITOR, MYLAR, 0.01 UF, 50V, 5%	
45	035-893	C7,8,9,12,13,14, 18,20,33,42,44,46	CAPACITOR, MYLAR' 0.1 UF, 50V, 5%	
				G

ASSEMBLY NO. 1373153 TITLE MONITOR SWITCH LOGIC AND COLOR FRAMING DETECTOR PWA, MODULE NO. 13

ITEM NO.	AMPEX PART NO.	REFERENCE NUMBER	DESCRIPTION	JEDEC NO. OR MFR. PART NO.
46	035-598	C30	CAPACITOR, MYLAR, 0.047 UF, 50V, 5%	
48	037-367	C24-27	CAPACITOR, TANT, 2.2 UF, 20V, 10%	
49	037-745	C39	CAPACITOR, TANT, 47 UF, 6V, 10%	
50	037-746	C4,48	CAPACITOR, TANT, 47 UF, 20V, 10%	
51	037-186	C3,47	CAPACITOR, TANT, 120 UF, 10V, 10%	
53	041-361	R41,73,89,91,97, 101,105,108,111, 114,117,120,123, 126,211	RESISTOR, COMP, 7.5K, 1/2W, 5%	
54	049-360	R49,195,202	RESISTOR, COMP, 5.1 OHM, 1/2W, 5%	
55	041-357	R43,44,74,88,90, 95,99,103,106, 109,112,115,118, 121,124,209	RESISTOR, COMP, 5.6K, 1/2W, 5%	
56	041-002	R55	RESISTOR, COMP, 10 OHM, 1/2W, 5%	
57	041-454	R12,45,59,172, 174,191,198	RESISTOR, COMP, 39 OHM, 1/2W, 5%	
58	041-283	R42,189,196	RESISTOR, COMP, 47 OHM, 1/2W, 5%	
59	041-345	R129	RESISTOR, COMP, 51 OHM, 1/2W, 5%	
60	041-534	R140	RESISTOR, COMP, 62 OHM, 1/2W, 5%	
61	041-003	R131,179,187	RESISTOR, COMP, 100 OHM, 1/2W, 5%	
62	041-334	R79,80	RESISTOR, COMP, 200 OHM, 1/2W, 5%	
63	041-473	R132,184	RESISTOR, COMP, 240 OHM, 1/2W, 5%	
64	041-528	R183,188	RESISTOR, COMP, 300 OHM, 1/2W, 5%	
65	041-336	R51	RESISTOR, COMP, 470 OHM, 1/2W, 5%	
66	041-404	R75,76	RESISTOR, COMP, 510 OHM, 1/2W, 5%	
67	041-343	R16	RESISTOR, COMP, 680 OHM, 1/2W, 5%	
68	041-007	R168,169	RESISTOR, COMP, 750 OHM, 1/2W, 5%	
69	041-245	R28,30,48,77,78, 85,127,185,194, 201	RESISTOR, COMP, 1K, 1/2W, 5%	
70	041-405	R175,182	RESISTOR, COMP, 1.2K, 1/2W, 5%	
71	041-462	R128	RESISTOR, COMP, 1.3K, 1/2W, 5%	
72	041-008	R46,186,192,199, 203,204	RESISTOR, COMP, 1.5K, 1/2W, 5%	
74	041-316	R31,33,35,53,54	RESISTOR, COMP, 2.4K, 1/2W, 5%	
75	041-475	R81-84,190,197	RESISTOR, COMP, 3K, 1/2W, 5%	
76	041-331	R147	RESISTOR, COMP, 3.3K, 1/2W, 5%	
77	041-001	R180,181,205	RESISTOR, COMP, 5.1K, 1/2W, 5%	
79	041-330	R137	RESISTOR, COMP, 6.8K, 1/2W, 5%	

G

ASSEMBLY NO. 1373153 TITLE MONITOR SWITCH LOGIC AND COLOR FRAMING DETECTOR PWA, MODULE NO. 13

ITEM NO.	AMPEX PART NO.	REFERENCE NUMBER	DESCRIPTION	JEDEC NO. OR MFR. PART NO.
82	041-010	R96,100,104,107, 110,113,116,119, 122,125,134,136, 141,142,144,178, 208	RESISTOR, COMP, 2K, 1/2W, 5%	
83	041-604	R13	RESISTOR, COMP, 11K, 1/2W, 5%	
85	041-020	R64,157,159,161, 163,165,167	RESISTOR, COMP, 47K, 1/2W, 5%	
86	041-358	R15	RESISTOR, COMP, 62K, 1/2W, 5%	
88	041-027	R63,65	RESISTOR, COMP, 220K, 1/2W, 5%	
89	041-522	R130	RESISTOR, COMP, 910 OHM, 1/2W, 5%	
90	041-023	R29,38,39,52,57, 58,66,67,70,71, 145,146,149-156, 158,160,162,164, 166,210	RESISTOR, COMP, 100K, 1/2W, 5%	
91	041-280	R170	RESISTOR, COMP, 820 OHM, 1W, 5%	
92	048-711	R193,200	RESISTOR, MF, 73.2 OHM, 1/4W, 1%	
93	048-712	R47,69	RESISTOR, MF, 75 OHM, 1/4W, 1%	
94	048-618	R177	RESISTOR, MF, 2000 OHM, 1/4W, 1%	
95	048-257	R176	RESISTOR, MF, 3010 OHM, 1/4W, 1%	
97	057-422	R36,37	RESISTOR, MF, 10.5K, 1/4W, 1%	
98	041-014	R32,34,40,68,72, 86,87,94,98,102	RESISTOR, COMP, 10K, 1/2W, 5%	
99	062-515	R133,135	RESISTOR, MF, 499 OHM, 1/8W, 1%	
100	062-548	R1,10,17,26	RESISTOR, MF, 604 OHM, 1/8W, 1%	
101	057-948	R6,7,22,23	RESISTOR, MF, 1100 OHM, 1/8W, 1%	
102	057-622	R2,3,8,9,18,19, 24,25	RESISTOR, MF, 1620 OHM, 1/8W, 1%	
103	062-610	R4,5,20,21	RESISTOR, MF, 1740 OHM, 1/8W, 1%	
104	062-379	R138	RESISTOR, MF, 2000 OHM, 1/8W, 1%	
105	057-202	R171	RESISTOR, MF, 7500 OHM, 1/8W, 1%	
106	057-203	R11,60	RESISTOR, MF, 10K, 1/8W, 1%	
107	042-777	R173	RESISTOR, MF, 27.4K, 1/8W, 1%	
108	062-644	R62	RESISTOR, MF, 40.2K, 1/8W, 1%	
109	062-607	R139	RESISTOR, MF, 237K, 1/8W, 1%	
111	041-254	R14,27,56,143	RESISTOR, COMP, 15K, 1/2W, 5%	
112	059-351	R61	RESISTOR, VAR, WW, 20K, 1W, 5%	
114	058-893	R50	RESISTOR, VAR, 200K, 1/2W, 10%	
115	540-003	L1,2	INDUCTOR, FXD, 220 UH, 5%	
116	540-015	L3	INDUCTOR, FXD, 1000 UH, 5%	
117	540-030	L5	INDUCTOR, FXD, 330 UH, 5%	
118	051-338	L4	INDUCTOR, FXD, 22 UH, 5%	
				G

ASSEMBLY NO. 1373153 TITLE MONITOR SWITCH LOGIC AND COLOR FRAMING DETECTOR PWA, MODULE NO. 13

ITEM NO.	AMPEX PART NO.	REFERENCE NUMBER	DESCRIPTION	JEDEC NO. OR MFR. PART NO.
120	586-075	A4,25,26	INTEGRATED CIRCUIT	SN7400N
121	586-076	A5,14	INTEGRATED CIRCUIT	SN7410N
122	586-077	A13	INTEGRATED CIRCUIT	SN7420N
123	586-097	A2	INTEGRATED CIRCUIT	F932
124	586-121	A18	INTEGRATED CIRCUIT	UA711
125	586-153	A3,11	INTEGRATED CIRCUIT	MC846P
126	586-255	A6,7	INTEGRATED CIRCUIT	CA3019
127	586-261	A9,16,19,22-24, 27,34	INTEGRATED CIRCUIT	LM302H
128	586-269	A17,37	INTEGRATED CIRCUIT	UA741
129	586-326	A15	INTEGRATED CIRCUIT	SN7404N
130	586-335	A10,35	INTEGRATED CIRCUIT	LM306H
131	586-309	A1,21,33,36	INTEGRATED CIRCUIT	UL9601
132	586-336	A20,28	INTEGRATED CIRCUIT	DM8800
133	586-415	A29	INTEGRATED CIRCUIT	MC857P
134	586-425	A32	INTEGRATED CIRCUIT	MC853P
135	586-489	A8,31	INTEGRATED CIRCUIT	MC1204L
136	586-533	A30,38	INTEGRATED CIRCUIT	SN74121N
137	586-152	A12	INTEGRATED CIRCUIT	MC836P
143	280-998		SPACER, XSTR, T0-5, REF: Q10,29	
144	280-130		SPACER, XSTR, T0-18, REF: Q1-9,11-20,22-28,30-33,35-49,51-73	
145	143-981		JACK, PC TIP, CLOSED ENTRY, REF: J1-8(A,B)J9,10(A,B,C)	
146	602-012	J1-10	PLUG, SHORTING, RED	
148	616-569		CABLE, COAX, 75 OHM	
150	250-188		BUMPER, PAD, BLK, RBR, ADH BACK	

G

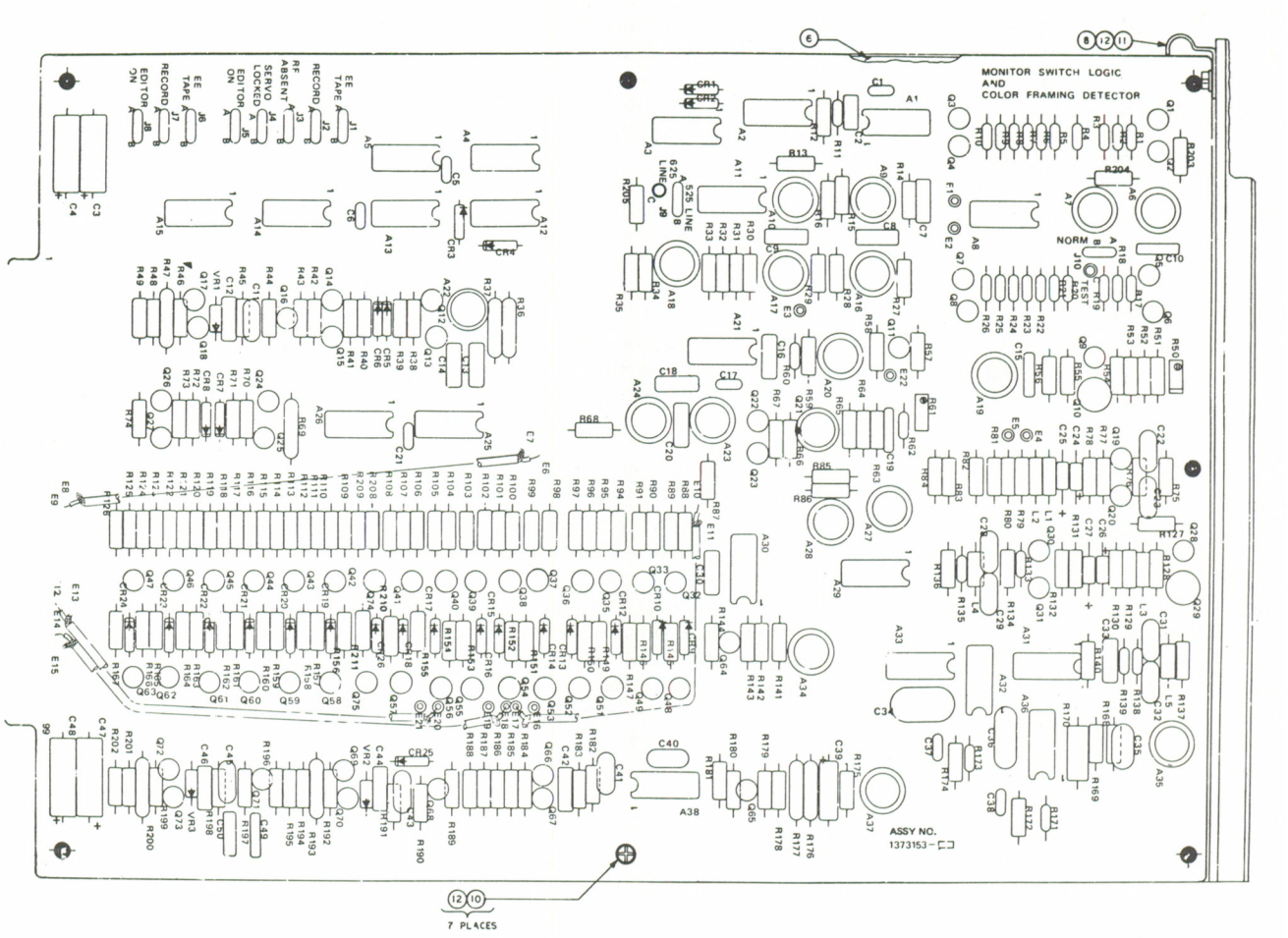

Assembly No. 1373153. Monitor Switch Logic and Color Framing Detector PWA, Module No. 13

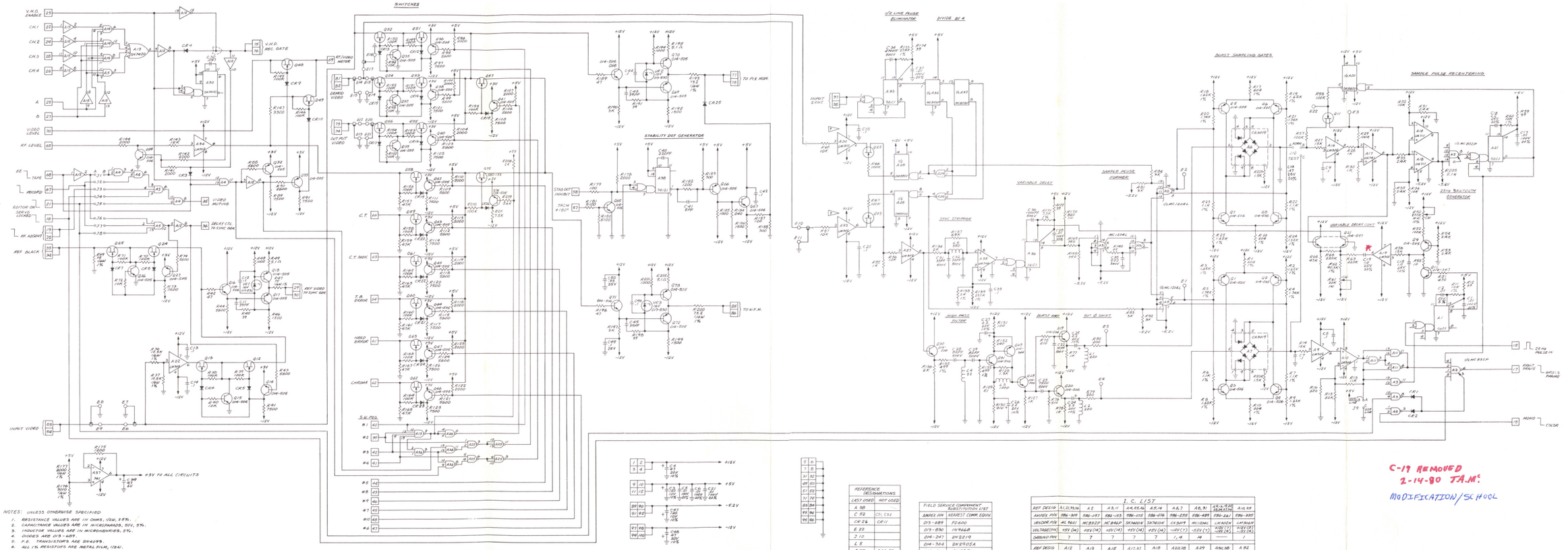

NOTES: UNLESS OTHERWISE SPECIFIED

1. RESISTANCE VALUES ARE IN OHMS, 1/2W, 5%.
2. CAPACITANCE VALUES ARE IN MICROFARADS, 50V, 5%.
3. INDUCTOR VALUES ARE IN MICROHENRIES, 5%.
4. DIODES ARE 019-689.
5. F.E. TRANSISTORS ARE 2N4393.
6. ALL 1% RESISTORS ARE METAL FILM, 1/8W.
7. VENDOR RESTRICTED TO NATIONAL SEMICONDUCTOR OR FAIRCHILD FOR 623-350-434. DO NOT MIX VENDORS ON THE SAME PRINTED WIRING ASSY.

REFERENCE DESIGNATIONS	
LAST USED	NOT USED
A 38	
C 52	C51, C52
CR 24	CR 11
E 23	
J 10	
L 5	
Q 75	Q 74, 50
R 211	R 208, 209, 210, 211
VR 3	

FIELD SERVICE COMPONENT SUBSTITUTION LIST	
AMPEX P/N	NEAREST COMM. EQUIV.
019-689	FD 600
019-830	1N 914 B
014-247	2N 2219
014-364	2N 2905 A
014-505	2N 3251
014-506	2N 2501
014-597	NONE
520-183	2N 4093

I. C. LIST

REF DESIG	A1, 39, 34	A2	A3, 11	A4, 25, 26	A5, 14	A6, 7	A8, 31	A9, 16, 18, 22, 30, 32, 36	A10, 35
AMPEX P/N	586-209	586-197	586-153	586-075	586-076	586-255	586-489	586-241	586-385
VENDOR P/N	MC 9601	MC 8822P	MC 846P	SN 7400N	SN 7404N	CA 3049	MC 1314L	LM 320H	LM 340K
VOLTAGE (PIN)	+5V (14)	+5V (14)	+5V (14)	+5V (14)	+5V (14)	+12V (7) -12V (7)	+12V (7) -12V (4)	+12V (8) -12V (4)	+12V (3) -12V (4)
GROUND PIN	7	7	7	7	7	7	14	—	1

REF DESIG	A12	A13	A15	A17, 37	A18	A20, 28	A29	A30, 38	A 33
AMPEX P/N	586-152	586-277	586-236	586-229	586-121	586-396	586-615	586-535	586-425
VENDOR P/N	MC 874P	SN 7420N	SN 7400N	uA 741 C	uA 711 C	SN 75150	MC 8577P	SN 74121N	MC 853P
VOLTAGE (PIN)	+5V (14)	+5V (14)	+5V (14)	+12V (7) -12V (4)	+12V (7) -12V (4)	+5V (14) -12V (7)	+5V (14)	+5V (14)	+5V (14)
GROUND PIN	7	7	7	—	1	3	7	7	7

C-19 REMOVED
2-14-80 T.A.M.
MODIFICATION/SCHOOL

Schematic No. 1373155.
Monitor Switch Logic and Color Framing Detector PWA, Module No. 13

©

ITEM NO.	AMPEX PART NO.	REFERENCE NUMBER	DESCRIPTION	JEDEC NO. OR MFR. PART NO.
	1375386-01		BURST DETECTOR PWA	
2	1375388		SCHEMATIC, BURST DETECTOR	
3	1373272-01		SHIELD, PWB	
4	1373273-01		HANDLE, MODULE	
5	1373285-42		OVERLAY	
6	1373227-01		CONTACT, GROUND	
9	013-599	CR1	DIODE	1N914
11	030-094	C4	CAPACITOR, MONO, 1.0 UF, 25V, 20%	
12	035-893	C3	CAPACITOR, MYLAR, 0.1 UF, 50V, 5%	
13	037-186	C1	CAPACITOR, TANT, 120 UF, 10V, 10%	
14	037-746	C2,5	CAPACITOR, TANT, 47 UF, 20V, 10%	
17	041-408	R3,5	RESISTOR, COMP, 10K, 1/4W, 5%	
18	041-430	R1,4,9	RESISTOR, COMP, 1.5K, 1/4W, 5%	
19	041-518	R2	RESISTOR, COMP, 33K, 1/4W, 5%	
20	041-531	R7	RESISTOR, COMP, 750 OHM, 1/4W, 5%	
21	041-648	R6	RESISTOR, COMP, 36 OHM, 1/4W, 5%	
22	041-778	R8	RESISTOR, COMP, 2.2M, 1/4W, 5%	
25	250-188		BUMPER, PAD, ADH SACK	
28	471-325		SCREW, FH, NO. 4-40 X 0.187 LG	
29	473-325		SCREW, XREC, PAN HD, NO. 4-40 X 0.312 LG	
30	496-004		NUT, ASSEM, NO. 4	
31	501-169		WASHER, PLAIN, NO. 4	
33	586-075	A1	INTEGRATED CIRCUIT	SN7400N
34	586-124	A3	INTEGRATED CIRCUIT	UA710HC
35	586-335	A2	INTEGRATED CIRCUIT	LM306H

SHEET 1 OF 1

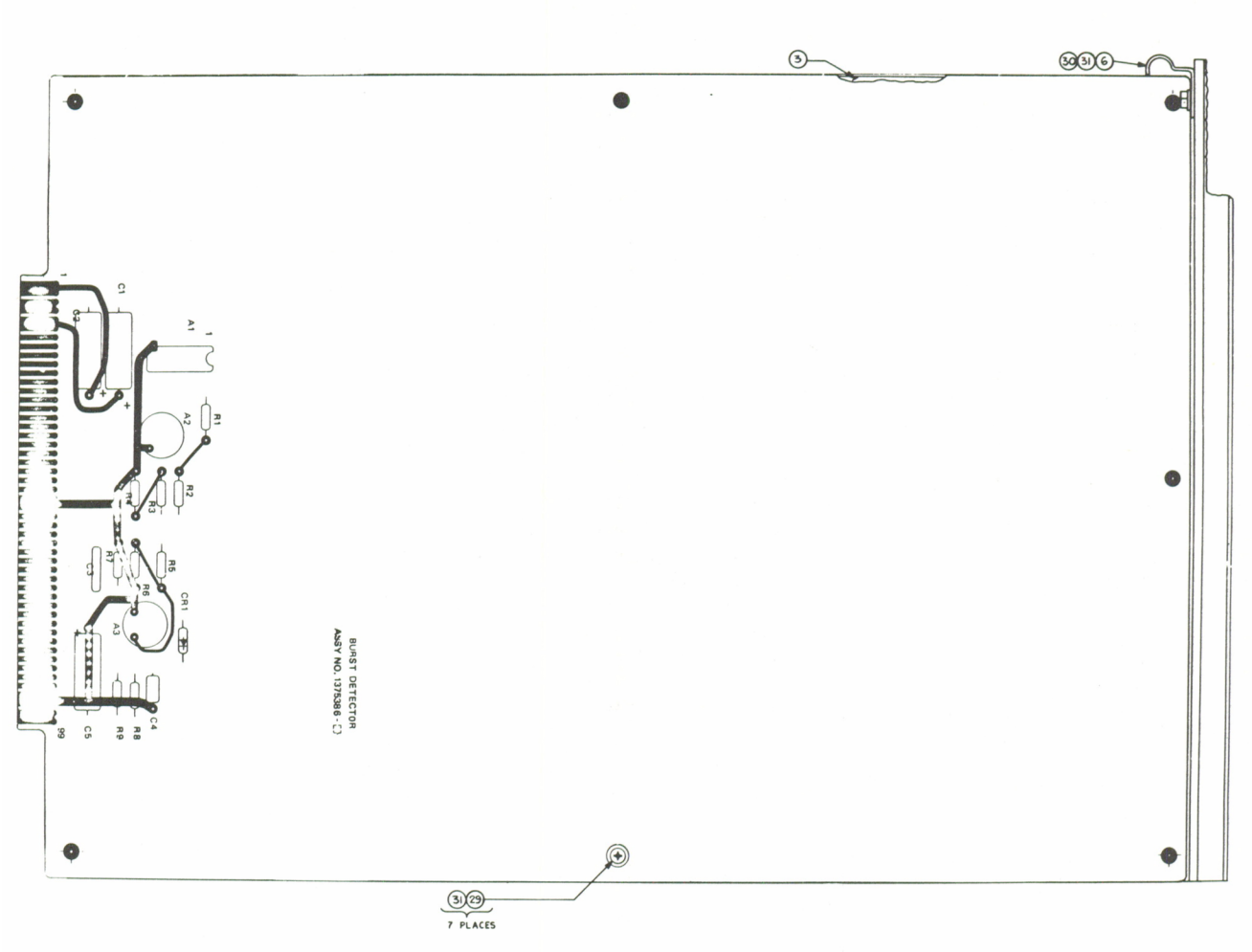

Assembly No. 1375386. Burst Detector PWA, Module No. 14

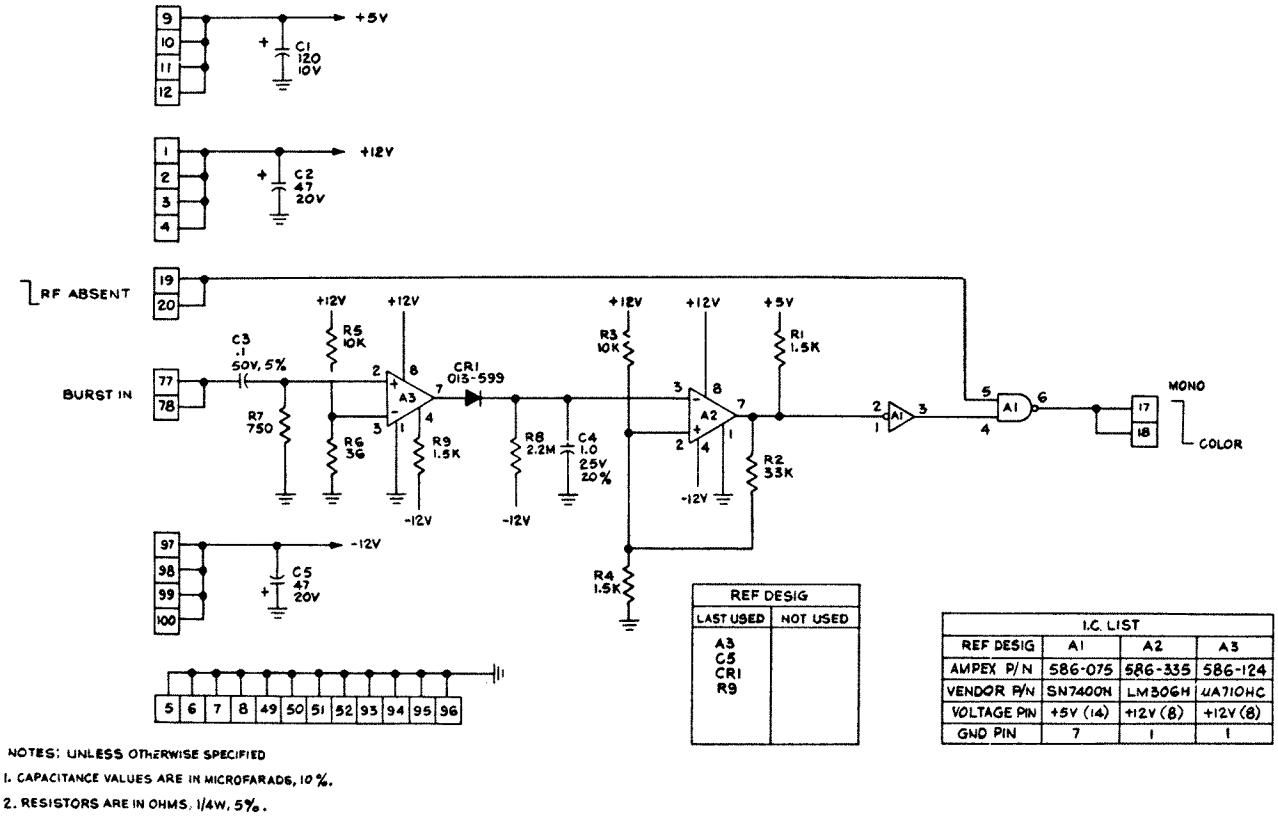

NOTES: UNLESS OTHERWISE SPECIFIED

1. CAPACITANCE VALUES ARE IN MICROFARADS, 10%.
2. RESISTORS ARE IN OHMS, 1/4W, 5%.

REF DESIG	
LAST USED	NOT USED
A3 C5 CR1 R9	

I.C. LIST			
REF DESIG	A1	A2	A3
AMPEX P/N	586-075	586-335	586-124
VENDOR P/N	SN7400N	LM306H	uA710HC
VOLTAGE PIN	+5V (14)	+12V (8)	+12V (8)
GND PIN	7	1	1

Schematic No. 1375388. Burst Detector PWA, Module No. 14

ITEM NO.	AMPEX PART NO.	REFERENCE NUMBER	DESCRIPTION	JEDEC NO. OR MFR. PART NO.
	1373165-04		AUTO-CHROMA PWA	
2	1373167		SCHEMATIC	
5	1373285-14		OVERLAY	
6	1373272		SHIELD, PWB	
7	1373273-13		HANDLE, MODULE	
8	049-360	R95,111	RESISTOR, COMP, 5.1 OHM, 1/2W, 5%	
9	041-283	R106	RESISTOR, COMP, 47 OHM, 1/2W, 5%	
10	041-384	R81,84	RESISTOR, COMP, 68 OHM, 1/2W, 5%	
11	041-003	R94,98,100,112, 115,130	RESISTOR, COMP, 100 OHM, 1/2W, 5%	
12	041-553	R80,85	RESISTOR, COMP, 120 OHM, 1/2W, 5%	
13	041-404	R109	RESISTOR, COMP, 510 OHM, 1/2W, 5%	
14	041-336	R9,10,50,51,60, 62,65	RESISTOR, COMP, 470 OHM, 1/2W, 5%	
15	041-006	R8,49	RESISTOR, COMP, 620 OHM, 1/2W, 5%	
17	041-012	R90,91	RESISTOR, COMP, 4.3K, 1/2W, 5%	
19	041-010	R12-16,24-40,67, 68,72,78,79,82,83	RESISTOR, COMP, 2K, 1/2W, 5%	
20	041-475	R97,114,120	RESISTOR, COMP, 3K, 1/2W, 5%	
22	041-309	R116	RESISTOR, COMP, 8.2K, 1/2W, 5%	
24	041-254	R11,48,59,61	RESISTOR, COMP, 15K, 1/2W, 5%	
25	041-529	R103	RESISTOR, COMP, 20K, 1/2W, 5%	
26	041-604	R108	RESISTOR, COMP, 11K, 1/2W, 5%	
27	041-498	R66,88	RESISTOR, COMP, 24K, 1/2W, 5%	
28	041-535	R74	RESISTOR, COMP, 30K, 1/2W, 5%	
29	041-021	R89	RESISTOR, COMP, 51K, 1/2W, 5%	
30	041-023	R63,76,86,102	RESISTOR, COMP, 100K, 1/2W, 5%	
31	041-286	R107	RESISTOR, COMP, 1M, 1/2W, 5%	
33	041-322	R75	RESISTOR, COMP, 18K, 1/2W, 5%	
34	041-018	R69	RESISTOR, COMP, 39K, 1/2W, 5%	
35	041-245	R96,110,117,127, 129,136	RESISTOR, COMP, 1K, 1/2W, 5%	
36	041-014	R64,70,139	RESISTOR, COMP, 10K, 1/2W, 5%	
38	057-675	R134	RESISTOR, MF, 301 OHM, 1/4W, 1%	
39	062-359	R131,132	RESISTOR, MF, 196 OHM, 1/4W, 1%	
40	062-294	R7,23,47,58	RESISTOR, MF, 392 OHM, 1/4W, 1%	
41	062-253	R128	RESISTOR, MF, 649 OHM, 1/4W, 1%	
42	048-259	R77,104	RESISTOR, MF, 1K, 1/4W, 1%	
43	062-483	R5,21,45,56	RESISTOR, MF, 1470 OHM, 1/4W, 1%	
44	062-482	R1,3,52,54	RESISTOR, MF, 1580 OHM, 1/4W, 1%	
45	057-499	R6,22,46,57	RESISTOR, MF, 866 OHM, 1/4W, 1%	
46	048-618	R73,101,105, 125,126	RESISTOR, MF, 2K, 1/4W, 1%	
47	048-761	R123	RESISTOR, MF, 2430 OHM, 1/4W, 1%	
48	042-481	R17,19,41,43	RESISTOR, MF, 2740 OHM, 1/4W, 1%	
49	048-256	R118	RESISTOR, MF, 3480 OHM, 1/4W, 1%	G

ASSEMBLY NO. 1373165 TITLE AUTO-CHROMA PWA, MODULE NO. 14

ITEM NO.	AMPEX PART NO.	REFERENCE NUMBER	DESCRIPTION	JEDEC NO. OR MFR. PART NO.
50	048-648	R2,4,18,20,42, 44,53,55	RESISTOR, MF, 3830 OHM, 1/4W, 1%	
51	062-259	R119,124	RESISTOR, MF, 4420 OHM, 1/4W, 1%	
52	057-917	R133	RESISTOR, MF, 5760 OHM, 1/4W, 1%	
53	057-911	R122	RESISTOR, MF, 1500 OHM, 1/4W, 1%	
54	041-239	R138	RESISTOR, COMP, 2.2K, 1/2W, 5%	
55	041-361	R92,93,140	RESISTOR, COMP, 7.5K, 1/2W, 5%	
56	044-873	R121	RESISTOR, VAR, CERMET, 1K, 1W, 10%	
57	058-459	R135	RESISTOR, VAR, CARBON, 5K, 500W, 10%	
58	044-299	R87	RESISTOR, VAR, WW, 5K, 1W, 5%	
59	044-616	R137	RESISTOR, VAR, CERMET, 50K, 1W, 5%	
60	030-057	C1,4,19,34,46, 51,55,67	CAPACITOR, CER, DISC, 0.01 UF, 100V, 20%	
61	067-013	C41	CAPACITOR, NON-POLARIZED, 20 UF, 15V, 20%	
63	035-893	C13,53,56,58,59	CAPACITOR, MYLAR, 0.1 UF, 50V, 5%	
64	037-367	C54	CAPACITOR, TANT, 2.2 UF, 20V, 10%	
65	037-985	C42,43	CAPACITOR, TANT, 15 UF, 20V, 10%	
66	037-136	C5,7,9,11,14-18, 20-30	CAPACITOR, TANT, 39 UF, 10V, 10%	
67	037-746	C31,66	CAPACITOR, TANT, 47 UF, 20V, 10%	
68	037-186	C32,65	CAPACITOR, TANT, 120 UF, 10V, 10%	
69	035-734	C2,33,37,64	CAPACITOR, MYLAR, 0.01 UF, 50V, 5%	
70	034-943	C61,63	CAPACITOR, MICA, 0.27 PF, 500V, 5%	
71	034-180	C57,60	CAPACITOR, MICA, 39 PF, 500V, 5%	
72	034-286	C62	CAPACITOR, MICA, 200 PF, 500V, 5%	
73	034-941	C39	CAPACITOR, MICA, 51 PF, 500V, 5%	
74	034-319	C6,8,10,12,44, 48,49	CAPACITOR, MICA, 270 PF, 500V, 5%	
75	034-212	C47,50	CAPACITOR, MICA, 330 PF, 500V, 5%	
76	056-163	C38	CAPACITOR, MICA, 470 PF, 500V, 5%	
77	034-326	C3,45,52	CAPACITOR, MICA, 750 PF, 500V, 5%	
79	034-153	C40	CAPACITOR, MICA, 1000 PF, 500V, 5%	
80	034-970	C35,36	CAPACITOR, MICA, 1500 PF, 500V, 5%	
83	541-068	L2	INDUCTOR, VAR, 10 UH, 20%	
84	540-008	L1	INDUCTOR, FXD, 680 UH, 5%	
85	541-073	L3	INDUCTOR, VAR, 6.8 UH, 20%	
87	014-505	Q9-11,29-31,39-42,45,46,49,50	TRANSISTOR	2N3251
88	014-506	Q1-3,32-34,43, 47,48,51	TRANSISTOR	2N2501
89	580-133	Q35,44	TRANSISTOR	2N4093
91	014-852	Q52	TRANSISTOR, DUAL	MD2369A
92	014-600	Q4-8,12-28,36-38,53	TRANSISTOR	2N3912
93	013-689	CR1-3	DIODE	FD600
94	013-830	VR1,2	DIODE, ZENER	1N966B
96	587-163	A29	INTEGRATED CIRCUIT	MC1330 G

ASSEMBLY NO. 1373165 TITLE AUTO-CHROMA PWA, MODULE NO. 14

ITEM NO.	AMPEX PART NO.	REFERENCE NUMBER.	DESCRIPTION	JEDEC NO. OR MFR. PART NO.
97	586-124	A28	INTEGRATED CIRCUIT	UA710HC
98	586-269	A20	INTEGRATED CIRCUIT	UA741HC
99	586-261	A4,8,16,17	INTEGRATED CIRCUIT	LM302H
100	586-533	A2,3,12-15,21-24	INTEGRATED CIRCUIT	SN74121N
101	586-617	A25	INTEGRATED CIRCUIT	F9602DC
102	586-326	A27	INTEGRATED CIRCUIT	SN7404P
103	586-076	A26	INTEGRATED CIRCUIT	SN7410N
104	586-075	A11	INTEGRATED CIRCUIT	SN7400N/ F9002
105	586-789	A19	INTEGRATED CIRCUIT	UA711HC
106	586-489	A1,9	INTEGRATED CIRCUIT	MC1204L
107	586-255	A5,7	INTEGRATED CIRCUIT	CA3019
108	586-282	A18	INTEGRATED CIRCUIT	MC1439G
109	586-800	A10	INTEGRATED CIRCUIT	SN74193N
110	586-509	A6	INTEGRATED CIRCUIT	F9311DC
113	119-259	S1,2	SWITCH, TOGGLE, LEVER-LOCK	
118	280-130		SPACER, XSTR, T0-18, REF: Q1-51,53	
120	932-035		BEAD, FERRITE, 1/8 IN	
122	6000001-20		KNOB, BLK, REF: R135	
123	143-981		CONNECTOR, JACK, PC TIP, REF: J1,2	
126	602-012	J1,2	PATCH BOARD PART, SHORTING PLUG	
128	250-188		BUMPER, PAD, BLK RBR, ADHESIVE BACK	
130	473-325		SCREW, XREC, PAN HD, NO. 4-40 X 0.312 LG	
131	501-169		WASHER, PLAIN, NO. 4	
132	471-325		SCREW, FLAT HD, NO. 4-40 X 0.187 LG	
133	1373227-01		CONTACT, GND	
134	496-004		NUT, ASSEM, NO. 4	
135	041-526	R99	RESISTOR, COMP, 1.6K, 1/2W, 5%	
136	041-007	R71,113	RESISTOR, COMP, 750 OHM, 1/2W, 5%	

G

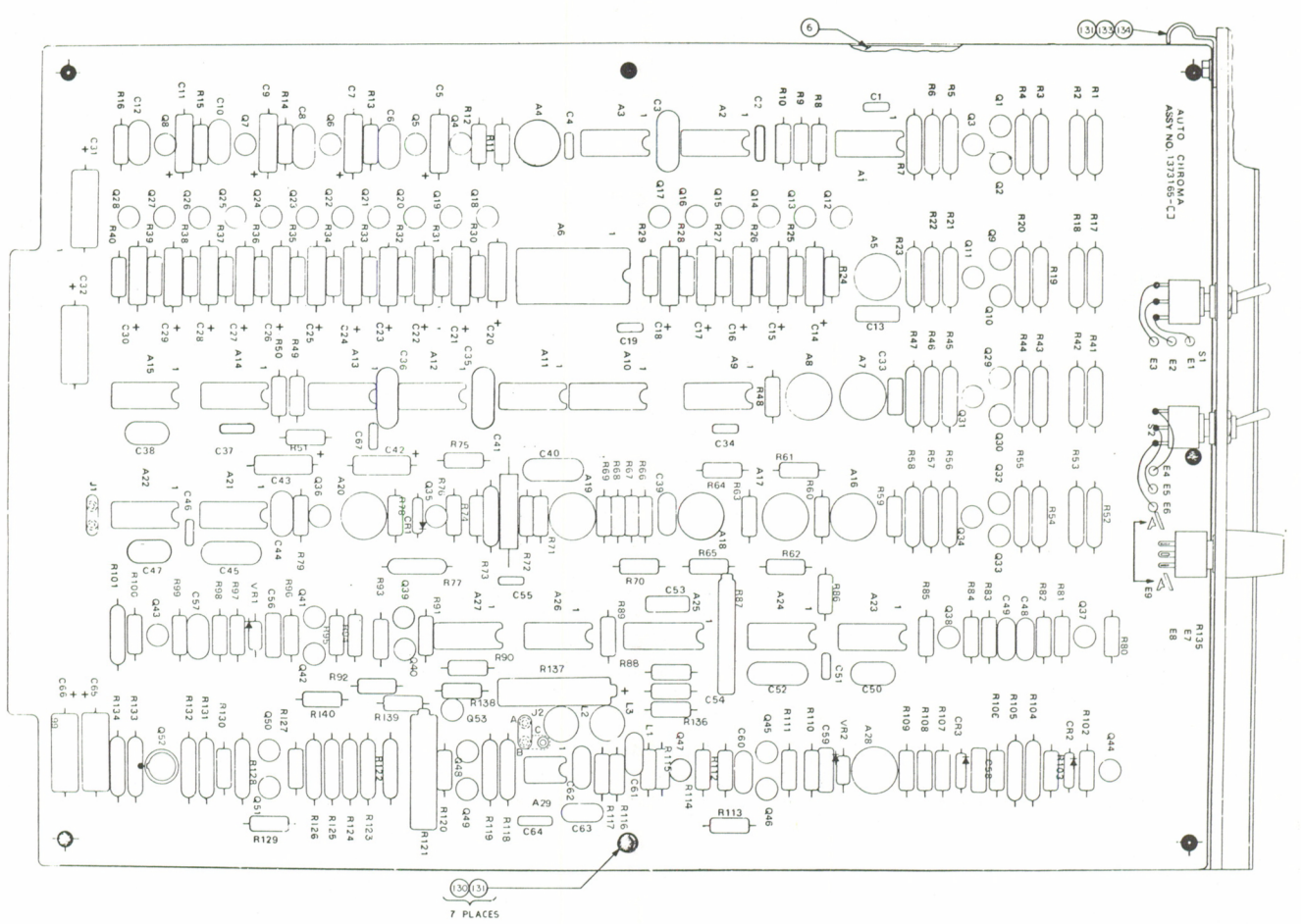

Assembly No. 1373165. Auto-Chroma PWA, Module No. 14

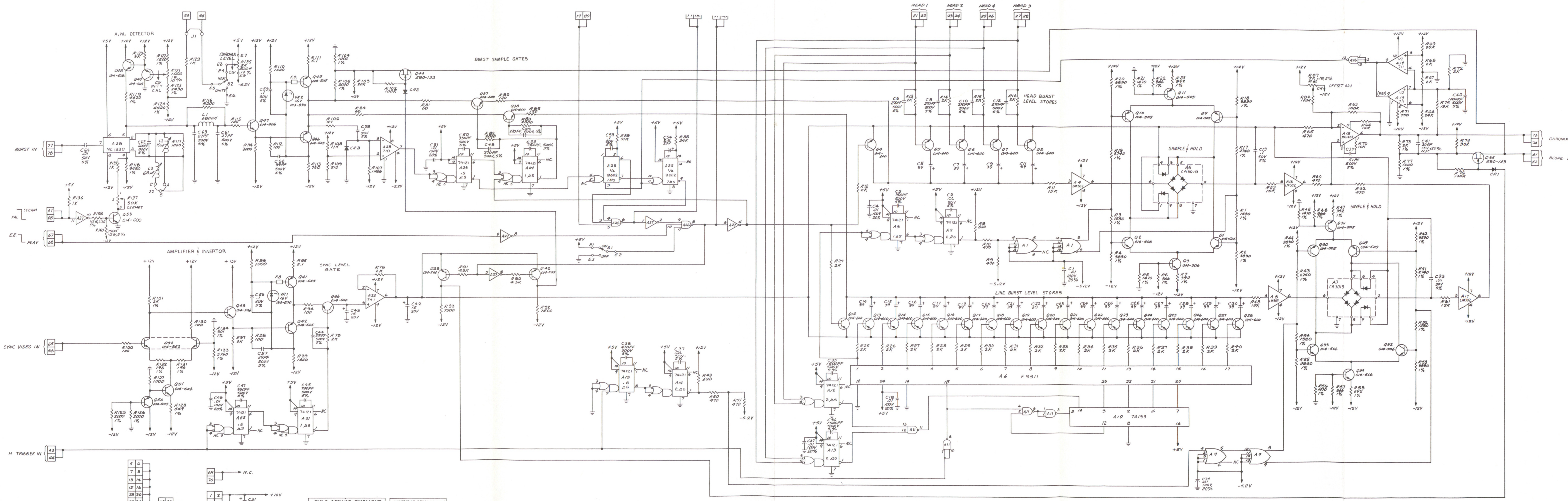

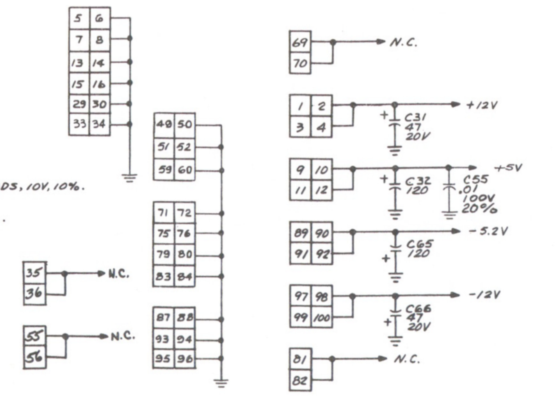

NOTES: UNLESS OTHERWISE SPECIFIED

1. ALL DIODES ARE 013-689.
2. ALL CAPACITOR VALUES ARE IN MICROFARADS, 10V, 10%.
3. ALL RESISTORS ARE 1/2W, 5%.
4. ALL 1% RESISTORS ARE 1/4W, MF (CD10).

B

FIELD SERVICE COMPONENT SUBSTITUTION LIST	
AMPEX PART NO.	NEAREST COM'L.EQ.
013-689	NONE
013-830	IN966B
014-852	MD2369A
014-505	2N3251
014-506	2N2501
014-600	2N3912
580-133	2N4093

REFERENCE DESIGNATION	
LAST USED	NOT USED
A 29 J2	
C 67	
CR3	
E 9	
L 3	
Q 53	
R140	
VR2 S2	

I.C. LIST

REF DESIG.	A1,9	A27	A11	A18	A26	A29	A28	A20	A4,8,16,17
AMPEX P/N	586-489	586-326	586-075	586-282	586-076	586-163	586-124	586-269	586-261
VENDOR P/N	MC1204L	SN7404P	SN7400N/9002	MC1439G	SN7410N	MC1330	UA710	UA741	LM302
VOLTAGE(PIN)	(7) -5.2V	(14) +5V	(14) +5V	(7) +12V (4) -12V	(14) +5V	(6) +5V (8) -12V	(8) +12V (4) -5.2V	(7) +12V (4) -12V	(7) +12V (4) -12V
GROUND	14	7	7	—	7	—	1	—	—

REF DESIG.	A19	A5,7	A10	A6	A2,3,12-15,21-24	A25
AMPEX P/N	586-789	586-255	586-800	586-509	586-533	586-617
VENDOR P/N	UA711	CA3019	SN74193N	F9311	SN74121N	F9602
VOLTAGE(PIN)	(10) +12V	—	(16) +5V	(24) +5V	(14) +5V	(16) +5V
GROUND	1	7	8	12	7	8

Schematic No. 1373167.
Auto-Chroma PWA, Module No. 14

ITEM NO.	AMPEX PART NO.	REFERENCE NUMBER	DESCRIPTION	JEDEC NO. OR MFR. PART NO.
	1373055-02		SWITCHER AND EQUALIZER PWA, NTSC/PAL-M, HIGH BAND	
	1373055-03		SWITCHER AND EQUALIZER PWA, PAL/SECAM, HIGH BAND	
	1373055-04		SWITCHER AND EQUALIZER PWA, LOW BAND COLOR	
2	1373057		SCHEMATIC, 525 LINE STD	
4	1373285-15		OVERLAY	
5	1373064-01		DELAY LINE ASSY (HIGH BAND)	
6	1373272-01		SHIELD, PWB	
7	1373273-01		HANDLE, MODULE	
8	013-689	CR1,2,3	DIODE	FD600
9	1373227-01		CONTACT, GND	
10	014-505	Q2,10,15,20,22, 24,26,28,30,44,46	TRANSISTOR	2N3251
11	014-581	Q1,3-9,11-14,16-19, 21,23,25,27,29,31, 32,33,45	TRANSISTOR	2N2369A
13	030-057	C1,2,7,16,39,40,42, 45,49,50,61,62,68, 69,76,77,92	CAPACITOR, CER, 0.01 UF, 100V, 20%	
15	030-094	C47	CAPACITOR, MONO, 1.0 UF, 25V, 20%	
16	034-153	C34,35	CAPACITOR, MICA, 1000 PF, 500V, 5%	
17	034-963	C73	CAPACITOR, MICA, 15 PF, 500V, 5%	
18	034-213	C10,14	CAPACITOR, MICA, 150 PF, 500V, 5%	
19	034-240	C12,13	CAPACITOR, MICA, 220 PF, 500V, 5%	
20	034-286	C5	CAPACITOR, MICA, 200 PF, 500V, 5%	
21	034-319	C44	CAPACITOR, MICA, 270 PF, 500V, 5%	
22	034-347	C9	CAPACITOR, MICA, 180 PF, 500V, 5%	
23	034-939	C67	CAPACITOR, MICA, 91 PF, 500V, 5% (NTSC/PAL-M)	
24	034-940	C46,48	CAPACITOR, MICA, 82 PF, 500V, 5%	
25	034-941	C43	CAPACITOR, MICA, 51 PF, 500V, 5%	
26	034-944	C11	CAPACITOR, MICA, 20 PF, 500V, 5%	
27	034-970	C31-33	CAPACITOR, MICA, 1500 PF, 500V, 5%	
28	035-734	C3,17-23,36,37,41, 51-57,75	CAPACITOR, MYLAR, 0.01 UF, 500V, 5%	
30	035-883	C30	CAPACITOR, MYLAR, 0.068 UF, 50V, 5%	
31	035-893	C4,6,8,15,27-29, 60,63,64,66,70-72	CAPACITOR, MYLAR, 0.1 UF, 50V, 5%	
33	037-164	C74	CAPACITOR, TANT, 1.0 UF, 35V, 10%	
34	037-186	C24	CAPACITOR, TANT, 120 UF, 10V, 10%	
35	037-746	C25,91	CAPACITOR, TANT, 47 UF, 20V, 10%	
36	037-985	C26	CAPACITOR, TANT, 15 UF, 20V, 10%	
37	038-052	C59	CAPACITOR, VAR, 0.8–12 PF, 750 VDC	
38	041-003	R59,64,103,124, 127,161,163,171	RESISTOR, COMP, 100 OHM, 1/2W, 5%	
39	041-004	R14	RESISTOR, COMP, 220 OHM, 1/2W, 5%	
40	041-007	R10	RESISTOR, COMP, 750 OHM, 1/2W, 5%	
41	041-008	R141	RESISTOR, COMP, 1.5K, 1/2W, 5% (NTSC/PAL-M)	
				L

ASSEMBLY NO. 1373055 TITLE SWITCHER AND EQUALIZER PWA, MODULE NO. 15

ITEM NO.	AMPEX PART NO.	REFERENCE NUMBER	DESCRIPTION	JEDEC NO. OR MFR. PART NO.
42	041-009	R135,165	RESISTOR, COMP, 1.8K, 1/2W, 5%	
43	041-010	R13,105,108,111, 114,117,120,157	RESISTOR, COMP, 2.0K, 1/2W, 5%	
44	041-014	R6,25,33,65,80, 91,136,178	RESISTOR, COMP, 10K, 1/2W, 5%	
45	041-023	R142,143,145-152	RESISTOR, COMP, 100K, 1/2W, 5%	
46	041-001	R144	RESISTOR, COMP, 5.1K, 1/2W, 5% (NTSC/PAL-M, LOW BAND COLOR)	
47	041-245	R1,2,44,46,49, 51,57,58,75,76, 107,110,113,116, 119,122,123,166	RESISTOR, COMP, 1000 OHM, 1/2W, 5%	
49	041-254	R162	RESISTOR, COMP, 15K, 1/2W, 5%	
50	041-256	R131,189	RESISTOR, COMP, 560 OHM, 1/2W, 5%	
51	041-273	R11	RESISTOR, COMP, 270 OHM, 1/2W, 5%	
52	041-278	R106,109,112, 115,118,121	RESISTOR, COMP, 2700 OHM, 1/2W, 5%	
53	041-283	R3,4,8,9,12,42, 52,60,63,67-69, 70,77,78,82,83, 98,99,101,102, 159,170,175,176, 180,181,191	RESISTOR, COMP, 47 OHM, 1/2W, 5%	
55	041-309	R160	RESISTOR, COMP, 8200 OHM, 1/2W, 5%	
56	041-317	R100	RESISTOR, COMP, 820 OHM, 1/2W, 5%	
57	041-329	R43	RESISTOR, COMP, 330 OHM, 1/2W, 5%	
58	041-334	R126,134	RESISTOR, COMP, 200 OHM, 1/2W, 5%	
59	041-336	R17,48,50	RESISTOR, COMP, 470 OHM, 1/2W, 5%	
60	041-343	R104,164	RESISTOR, COMP, 680 OHM, 1/2W, 5%	
61	041-344	R19,24,125,130	RESISTOR, COMP, 390 OHM, 1/2W, 5%	
62	041-461	R129	RESISTOR, COMP, 180 OHM, 1/2W, 5%	
63	041-474	R30,53,54,90	RESISTOR, COMP, 36 OHM, 1/2W, 5%	
64	041-475	R16,31,32,88,89	RESISTOR, COMP, 3K, 1/2W, 5% (HIGH BAND)	
65	041-485	R15	RESISTOR, COMP, 16 OHM, 1/2W, 5%	
66	041-489	R57,61,62,79, 81,177,179	RESISTOR, COMP, 33 OHM, 1/2W, 5%	
67	041-500	R182,183	RESISTOR, COMP, 510 OHM, 1W, 5%	
68	041-516	R168	RESISTOR, COMP, 75 OHM, 1/2W, 5%	
69	041-593	R18	RESISTOR, COMP, 110 OHM, 1/2W, 5%	
70	041-833	R20,23	RESISTOR, COMP, 750 OHM, 1W, 5%	
71	041-963	R128	RESISTOR, COMP, 12 OHM, 1/2W, 5%	
72	041-478	R190	RESISTOR, COMP, 1.1K, 1/2W, 5%	
73	250-188		BUMPER, PAD, BLK RBR, ADH BACK	
74	034-184	C67	CAPACITOR, MICA, 68 PF, 500V, 5% (PAL/SECAM)	
75	041-525	R141,144	RESISTOR, COMP, 3.6K, 1/2W, 5% (PAL/SECAM)	
76	041-475	R16,31,32,88, 89, 141	RESISTOR, COMP, 3K, 1/2W, 5% (LOW BAND COLOR)	
77	044-735	R45	RESISTOR, VAR, CER, 100 OHM, 1W, 10%	
78	044-792	R138	RESISTOR, VAR, CER, 500 OHM, 1W, 10%	
79	051-360	L8	INDUCTOR, FXD, 4700 UH, 5%	L

ASSEMBLY NO. 1373055 TITLE SWITCHER AND EQUALIZER PWA, MODULE NO. 15

ITEM NO.	AMPEX PART NO.	REFERENCE NUMBER	DESCRIPTION	JEDEC NO. OR MFR. PART NO.
80	051-593	L1,4	INDUCTOR, FXD, 0.39 UH, 20%	
81	051-599	L7	INDUCTOR, FXD, 0.82 UH, 5%	
82	1373492		SCHEMATIC, 625 LINE, STD	
83	056-292	C65	CAPACITOR, MICA, 500 PF, 500V, 5%	
84	062-807	R186,187	RESISTOR, MF, 25.5 OHM, 1/8W, 1%	
85	062-847	R188	RESISTOR, MF, 100 OHM, 1/8W, 1%	
88	062-496	R139	RESISTOR, MF, 665 OHM, 1/4W, 1%	
89	057-817	R132	RESISTOR, MF, 8250 OHM, 1/4W, 1%	
90	057-175	R27,28,35,36, 85,86,93,94	RESISTOR, MF, 1910 OHM, 1/4W, 1%	
91	048-889	R173	RESISTOR, MF, 49.9 OHM, 1/4W, 1%	
93	048-709	R47	RESISTOR, MF, 51.1 OHM, 1/4W, 1% (HIGH BAND)	
94	057-908	R21,22	RESISTOR, MF, 71.5 OHM, 1/4W, 1%	
95	048-712	R66,71,72	RESISTOR, MF, 75 OHM, 1/4W, 1%	
96	048-692	R38,39,96,97	RESISTOR, MF, 82.5 OHM, 1/4W, 1%	
97	057-979	R40,41,55,56,73, 74,184,185	RESISTOR, MF, 147 OHM, 1/4W, 1%	
98	062-392	R156	RESISTOR, MF, 215 OHM, 1/4W, 1%	
99	057-675	R167,172,174	RESISTOR, MF, 301 OHM, 1/4W, 1%	
100	057-679	R153-155	RESISTOR, MF, 634 OHM, 1/4W, 1%	
101	048-260	R158	RESISTOR, MF, 681 OHM, 1/4W, 1%	
102	057-791	R137	RESISTOR, MF, 1740 OHM, 1/4W, 1%	
103	057-911	R169	RESISTOR, MF, 1500 OHM, 1/4W, 1%	
104	057-914	R140	RESISTOR, MF, 2870 OHM, 1/4W, 1%	
105	057-174	R133	RESISTOR, MF, 4320 OHM, 1/4W, 1%	
106	057-913	R26,29,34,37,84, 87,92,95	RESISTOR, MF, 2550 OHM, 1/4W, 1%	
107	042-471	R47	RESISTOR, MF, 100 OHM, 1/4W, 1%	
108	103307-02		STANDOFF, REF: C59	
109	541-142	L2,3,9	INDUCTOR, FXD, 1.2 UH, 5% (NTSC/PAL-M, LOW BAND COLOR)	
111	139-037	J2,5	CONNECTOR, COAX, RF	
113	143-981		JACK, CLOSED ENTRY, REF: J1,3,4,6,7	
114	226-035		BEAD, FERRITE	
115	501-169		WASHER, SM PATT, NO. 4	
116	280-130		PAD, MTG, XSTR, T0-18, REF: Q1-46	
118	471-325		SCREW, FH, NO. 4-40 X 0.188 LG	
119	302-395		STRAP, CABLE, MOLDED	
120	473-325		SCREW, ASSEM, NO. 4-40 X 5/16	
121	540-022	L9	INDUCTOR, FXD, 0.68 UH, 20% (PAL/SECAM)	
122	541-142	L2,3	INDUCTOR, FXD, 1.2 UH, 5% (PAL/SECAM)	
123	501-008		WASHER, PLAIN, NO. 4	
124	496-004		NUT, ASSY, NO. 4-40	
125	580-133	Q34-43	TRANSISTOR	2N4093
126	586-168	A10,13,19	INTEGRATED CIRCUIT	SN74H00N

L

SHEET 3 OF 5

ASSEMBLY NO. 1373055 TITLE SWITCHER AND EQUALIZER PWA, MODULE NO. 15

ITEM NO.	AMPEX PART NO.	REFERENCE NUMBER	DESCRIPTION	JEDEC NO. OR MFR. PART NO.
128	586-255	A1-4,14-17	INTEGRATED CIRCUIT	CA3019
129	586-447	A18,20	INTEGRATED CIRCUIT	CA3026
130	586-533	A5-8	INTEGRATED CIRCUIT	SN74121N
131	586-700	A11,12	INTEGRATED CIRCUIT	SN74H74N
132	587-095	A9	INTEGRATED CIRCUIT	SN74S74N
135	602-012		PLUG, SHORTING	
138	932-035		BEAD, FERRITE	
139	1365686-01	L6	INDUCTOR, VAR, 1.5 UH	
140	1365686-02	L10	INDUCTOR, VAR, 2.2 UH	
141	1365686-03	L5	INDUCTOR, VAR, 3.9 UH	
142	1365687-35	L11	INDUCTOR, VAR, 1.37 UH (HIGH BAND)	
143	1365687-34	L12	INDUCTOR, VAR, 1.13 UH (HIGH BAND)	
144	1365687-33	L13	INDUCTOR, VAR, 0.910 UH (HIGH BAND)	
145	1365687-32	L16	INDUCTOR, VAR, 0.251 UH (HIGH BAND)	
146	1365687-31	L14	INDUCTOR, VAR, 0.146 UH (HIGH BAND)	
147	1365687-30	L15	INDUCTOR, VAR, 0.139 UH (HIGH BAND)	
148	1366188-26	T1	TRANSFORMER, VAR, 2.12 UH (PAL/SECAM)	
149	1366188-27	T3	TRANSFORMER, VAR, 2.26 UH (PAL/SECAM)	
150	1366188-19	T1	TRANSFORMER, VAR, 3.41 UH (NTSC/PAL-M)	
151	1366188-18	T3	TRANSFORMER, VAR, 2.92 UH (NTSC/PAL-M)	
152	1366188-17	T2	TRANSFORMER, VAR, 2.57 UH (NTSC/PAL-M)	
153	1366188-28	T2	TRANSFORMER, VAR, 2.44 UH (PAL/SECAM)	
154	034-183	C38	CAPACITOR, MICA, 62 PF, 5%	
155	034-215	C58	CAPACITOR, MICA, 10 PF, 5%	
156	056-508	C78	CAPACITOR, MICA, 115 PF, 1% (HIGH BAND)	
157	056-640	C79	CAPACITOR, MICA, 232 PF, 1% (HIGH BAND)	
158	056-636	C80	CAPACITOR, MICA, 8.7 PF, ±0.5 PF (HIGH BAND)	
159	056-637	C81	CAPACITOR, MICA, 38 PF, ±0.5 PF (HIGH BAND)	
160	034-919	C82	CAPACITOR, MICA, 270 PF, 1% (HIGH BAND)	
161	056-638	C83	CAPACITOR, MICA, 42 PF, ±0.5 PF (HIGH BAND)	
162	034-688	C84	CAPACITOR, MICA, 30 PF, ±0.5 PF (HIGH BAND)	
163	056-639	C85	CAPACITOR, MICA, 96.2 PF, 1% (HIGH BAND)	
164	056-635	C86	CAPACITOR, MICA, 656 PF, 1% (NTSC/PAL-M)	
165	034-540	C87,89	CAPACITOR, MICA, 51.0 PF, 1% (HIGH BAND)	
166	056-634	C88	CAPACITOR, MICA, 587 PF, 1% (HIGH BAND)	
167	056-633	C90	CAPACITOR, MICA, 532 PF, 1% (NTSC/PAL-M)	
168	034-241	C90	CAPACITOR, MICA, 360 PF, 1% (PAL/SECAM)	
169	056-290	C86	CAPACITOR, MICA, 430 PF, 1% (PAL/SECAM)	
172	1375298		SCHEMATIC (LOW BAND COLOR)	
173	1373064-02		DELAY LINE ASSEMBLY (LOW BAND COLOR)	
175	1365687-47	L15	INDUCTOR, VAR, 0.192 UH (LOW BAND COLOR)	
176	1365687-48	L14	INDUCTOR, VAR, 0.201 UH (LOW BAND COLOR)	
177	1365687-49	L16	INDUCTOR, VAR, 0.347 UH (LOW BAND COLOR)	
178	1365687-50	L13	INDUCTOR, VAR, 1.25 UH (LOW BAND COLOR)	
179	1365687-51	L12	INDUCTOR, VAR, 1.56 UH (LOW BAND COLOR)	
				L

ASSEMBLY NO. 1373055 TITLE SWITCHER AND EQUALIZER PWA, MODULE NO. 15

ITEM NO.	AMPEX PART NO.	REFERENCE NUMBER	DESCRIPTION	JEDEC NO. OR MFR. PART NO.
180	1365687-36	L11	INDUCTOR, VAR, 1.87 UH (LOW BAND COLOR)	
182	1366188-29	T2	TRANSFORMER, VAR, 3.55 UH (LOW BAND COLOR)	
183	1366188-30	T3	TRANSFORMER, VAR, 4.03 UH (LOW BAND COLOR)	
184	1366188-14	T1	TRANSFORMER, VAR, 4.70 UH (LOW BAND COLOR)	
186	034-224	C78	CAPACITOR, MICA, 160 PF, 1% (LOW BAND COLOR)	
187	034-517	C86	CAPACITOR, MICA, 910 PF, 1% (LOW BAND COLOR)	
188	034-876	C79	CAPACITOR, MICA, 321 PF, 1% (LOW BAND COLOR)	
189	056-311	C82	CAPACITOR, MICA, 372 PF, 1% (LOW BAND COLOR)	
190	056-395	C83	CAPACITOR, MICA, 58.2 PF, 1% (LOW BAND COLOR)	
191	056-405	C81	CAPACITOR, MICA, 53 PF, 1% (LOW BAND COLOR)	
192	056-407	C87,89	CAPACITOR, MICA, 71 PF, 1% (LOW BAND COLOR)	
193	056-511	C85	CAPACITOR, MICA, 134 PF, 1% (LOW BAND COLOR)	
194	056-580	C80	CAPACITOR, MICA, 12 PF, ±0.5 PF (LOW BAND COLOR)	
195	056-495	C84	CAPACITOR, MICA, 41 PF, 1% (LOW BAND COLOR)	
196	056-673	C88	CAPACITOR, MICA, 810 PF, 1% (LOW BAND COLOR)	
197	056-383	C90	CAPACITOR, MICA, 736 PF, 1% (LOW BAND COLOR)	
198	034-961	C67	CAPACITOR, MICA, 120 PF, 500V, 5% (LOW BAND COLOR)	

L

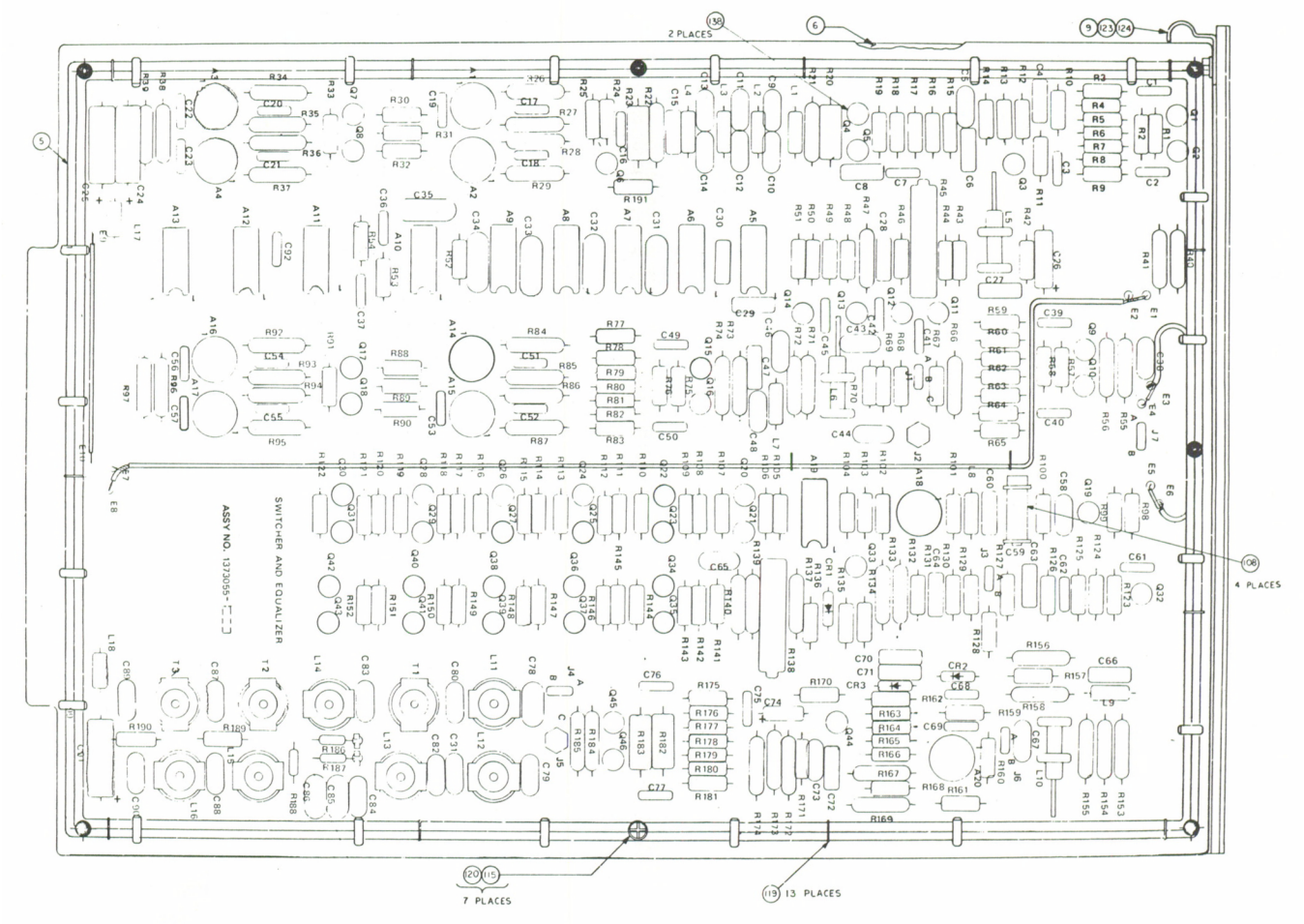

Assembly No. 1373055. Switcher and Equalizer PWA, Module No. 15

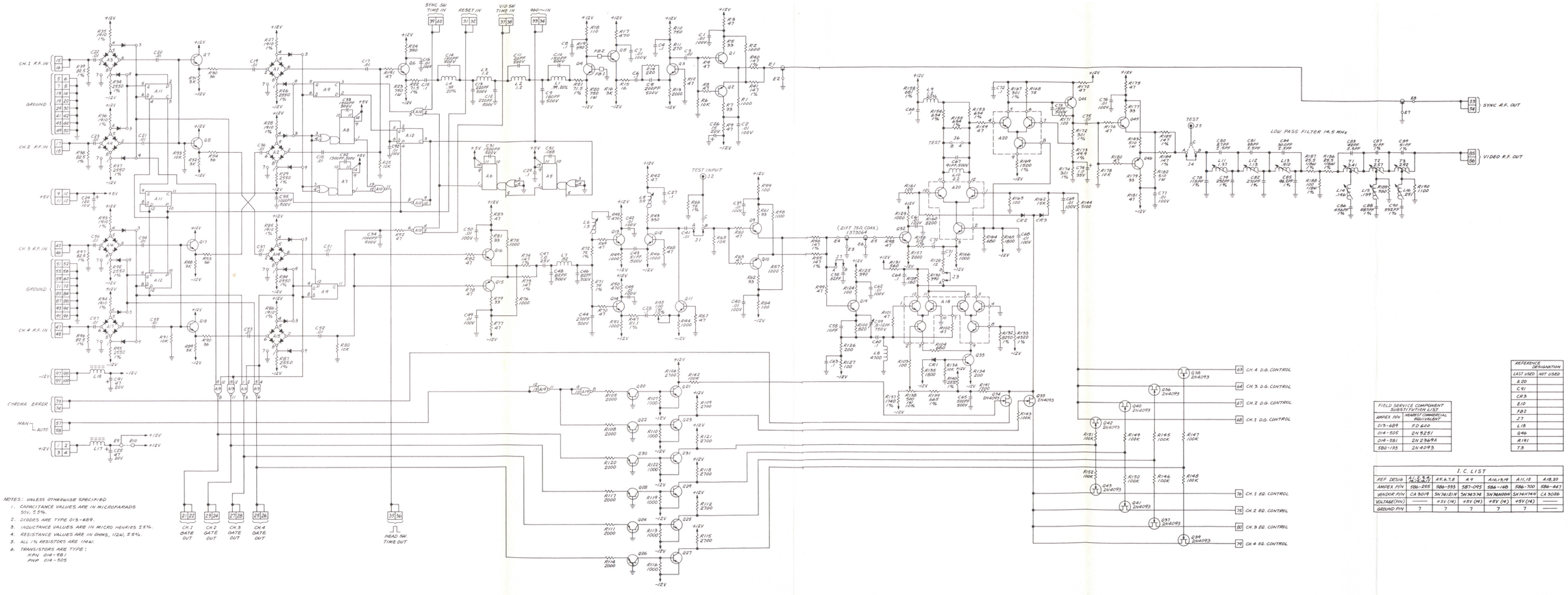

NOTES: UNLESS OTHERWISE SPECIFIED

1. CAPACITANCE VALUES ARE IN MICROFARADS 50V, ±5%.
2. DIODES ARE TYPE 015-689.
3. INDUCTANCE VALUES ARE IN MICRO HENRIES ±5%.
4. RESISTANCE VALUES ARE IN OHMS, 1/2W, ±5%.
5. ALL 1% RESISTORS ARE 1/4W.
6. TRANSISTORS ARE TYPE:
   NPN 014-581
   PNP 014-505

FIELD SERVICE COMPONENT SUBSTITUTION LIST	
AMPEX P/N	NEAREST COMMERCIAL EQUIVALENT
015-689	FD 600
014-505	2N5251
014-581	2N 2369A
580-195	2N 4093

REFERENCE DESIGNATION	
LIST USED	NOT USED
A 20	
C 91	
CR 3	
E 10	
FB 2	
J 7	
L 18	
Q 46	
R 191	
T 3	

I. C. LIST

REF DESIG	A1, 2, 5, 6, A3, A4	A4, A7, A8	A 9	A10, 13, 14	A11, 12	A 18, 20
AMPEX P/N	586-295	586-593	587-095	586-160	586-700	586-447
VENDOR P/N	CA 3019	SN74121N	SN74S74	SN74H00N	SN74H74N	CA 3028
VOLTAGE(PIN)	———	+5V (14)	+5V (14)	+5V (14)	+5V (14)	———
GROUND PIN	7	7	7	7	7	———

Schematic No. 1373057.
Switcher and Equalizer PWA,
High Band, NTSC/PAL-M, Module No. 15

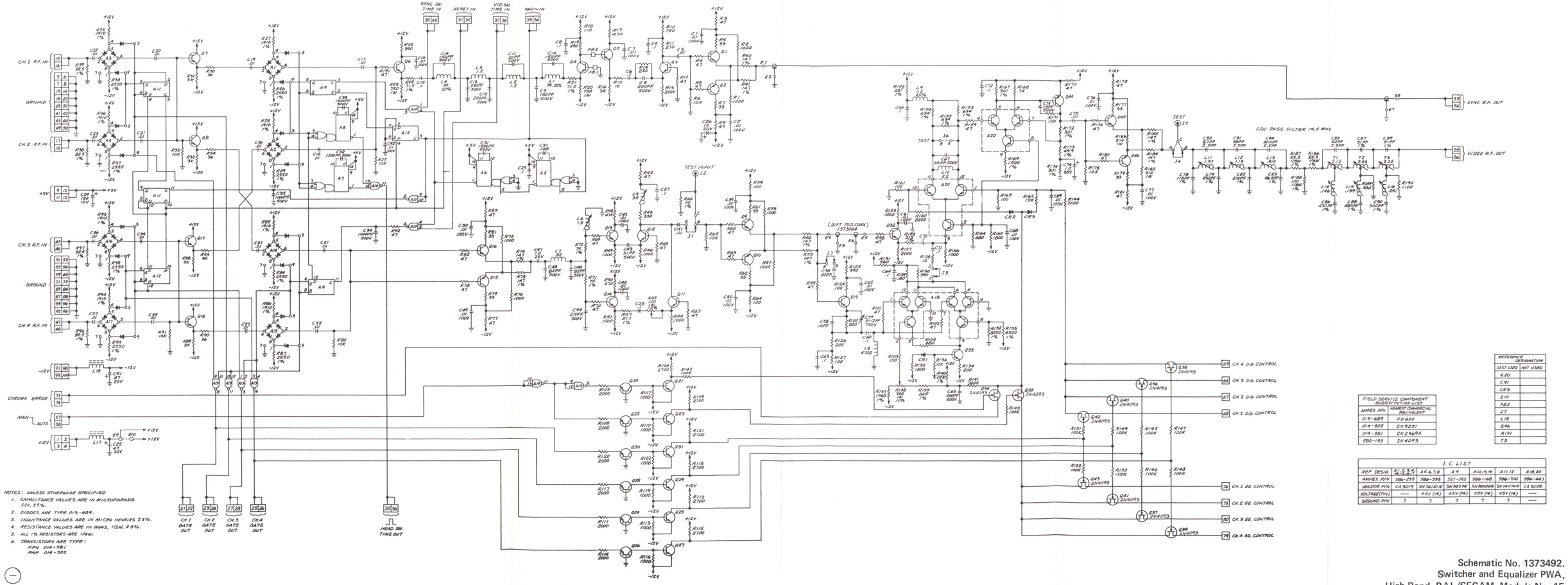

NOTES: UNLESS OTHERWISE SPECIFIED
1. CAPACITANCE VALUES ARE IN MICROFARADS 50V. ±5%.
2. DIODES ARE TYPE 015-689.
3. INDUCTANCE VALUES ARE IN MICRO HENRIES ±5%.
4. RESISTANCE VALUES ARE IN OHMS, 1/2W, ±5%.
5. ALL 1% RESISTORS ARE 1/4W.
6. TRANSISTORS ARE TYPE:
   NPN 014-581
   PNP 014-505

FIELD SERVICE COMPONENT SUBSTITUTION LIST	
AMPEX P/N	NEAREST COMMERCIAL EQUIVALENT
015-689	FD 600
014-505	2N5251
014-581	2N2369A
580-193	2N4093

REFERENCE DESIGNATION	
LAST USED	NOT USED
A20	
C91	
CR3	
E10	
FB2	
J7	
L18	
Q46	
R191	
T3	

I.C. LIST						
REF DESIG	A1,3,5,7, A2,4,6,8	A9	A10,13,14	A11,12	A18,20
AMPEX P/N	586-255	586-593	587-095	586-168	586-700	586-447
VENDOR P/N	CA 3019	SN76131N	SN76160N	SN74174N	CA 3028
VOLTAGE(PIN)	—	+5V (14)	+5V (14)	+5V (14)	+5V (14)	—
GROUND PIN	7	7	7	7	7	—

Schematic No. 1373492.
Switcher and Equalizer PWA,
High Band, PAL/SECAM, Module No. 15

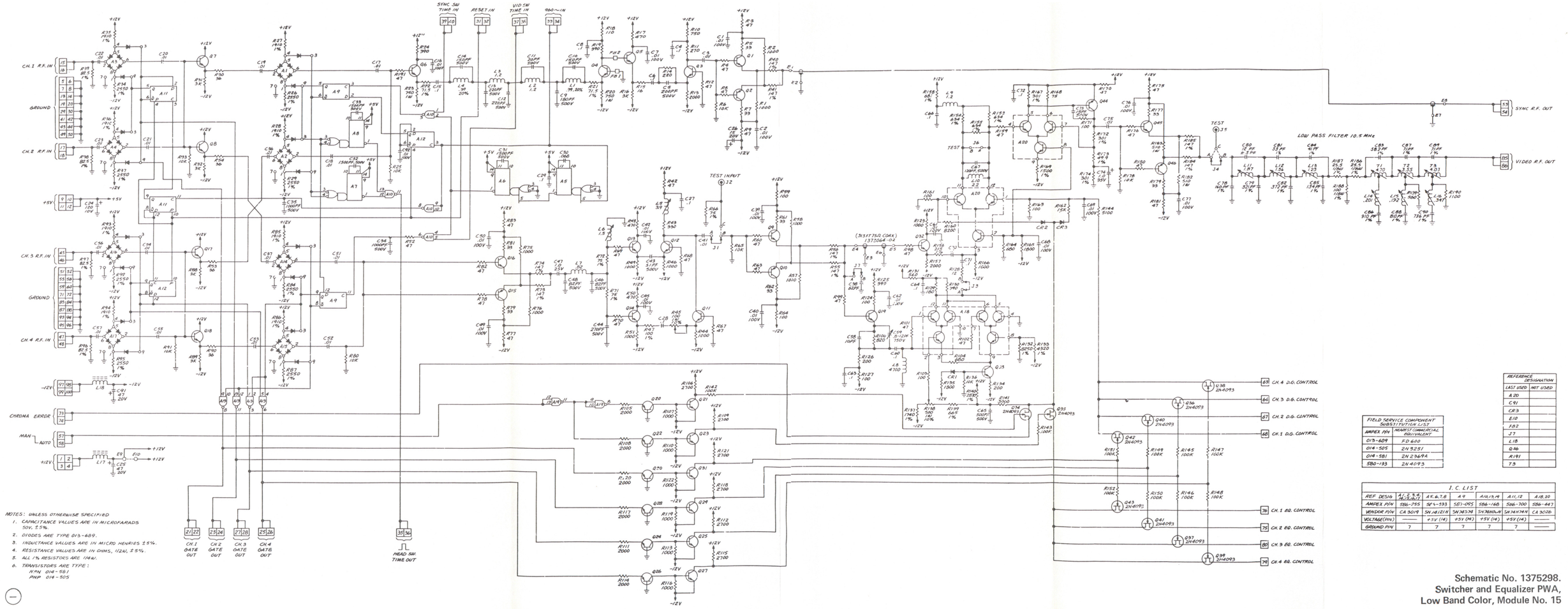

NOTES: UNLESS OTHERWISE SPECIFIED

1. CAPACITANCE VALUES ARE IN MICROFARADS 50V, ±5%.
2. DIODES ARE TYPE 015-689.
3. INDUCTANCE VALUES ARE IN MICRO HENRIES ±5%.
4. RESISTANCE VALUES ARE IN OHMS, 1/2W, ±5%.
5. ALL 1% RESISTORS ARE 1/4W.
6. TRANSISTORS ARE TYPE:
   NPN 014-581
   PNP 014-505

FIELD SERVICE COMPONENT SUBSTITUTION LIST	
AMPEX P/N	NEAREST COMMERCIAL EQUIVALENT
015-609	FD 600
014-505	2N 5251
014-581	2N 3569A
580-133	2N 4093

REFERENCE DESIGNATION	
LAST USED	NOT USED
A20	
C91	
CR3	
E10	
F82	
J7	
L18	
Q46	
R191	
T3	

I.C LIST						
REF DESIG	A1, 2, 3, 5, 6, 7, 8, 9, 10, 12	A5, 6, 7, 8	A9	A10, 13, 14	A11, 12	A18, 20
AMPEX P/N	586-755	586-593	587-095	586-168	586-700	586-647
VENDOR P/N	CA 3019	SN 74121N	SN 7437N	SN 7490N	SN 74174N	CA 3026
VOLTAGE(PIN)	——	+5V (14)	+5V (14)	+5V (14)	+5V (14)	——
GROUND PIN	7	7	7	7	7	——

Schematic No. 1375298.
Switcher and Equalizer PWA,
Low Band Color, Module No. 15

ITEM NO.	AMPEX PART NO.	REFERENCE NUMBER	DESCRIPTION	JEDEC NO. OR MFR. PART NO.
	1373058-05		DEMODULATOR PWA, NTSC/PAL-M, HIGH BAND	
	1373058-07		DEMODULATOR PWA, PAL/SECAM, HIGH BAND	
	1373058-08		DEMODULATOR PWA, LOW BAND COLOR	
3	1373060		SCHEMATIC, 525 LINE STD	
4	1373061		SCHEMATIC, 625 LINE STD	
5	1373285-16		OVERLAY	
6	1373272		SHIELD, PWB	
7	1373273-01		HANDLE, MODULE	
8	1365687-23	L7	INDUCTOR, VAR, 2.25 UH (NTSC/PAL-M)	
9	1365687-36	L7	INDUCTOR, VAR, 1.87 UH (PAL/SECAM)	
10	1365687-38	L9	INDUCTOR, VAR, 2.65 UH (NTSC/PAL-M)	
11	1365687-37	L9	INDUCTOR, VAR, 2.21 UH (PAL/SECAM)	
12	1365687-40	L11	INDUCTOR, VAR, 3.25 UH (NTSC/PAL-M)	
13	1365687-39	L11	INDUCTOR, VAR, 2.71 UH (PAL/SECAM)	
14	1365687-43	L4	INDUCTOR, VAR, 11.6 UH (NTSC/PAL-M)	
15	1365687-41	L4	INDUCTOR, VAR, 9.67 UH (PAL/SECAM)	
16	1365687-45	L2	INDUCTOR, VAR, 13.3 UH (NTSC/PAL-M)	
17	1365687-42	L2	INDUCTOR, VAR, 11.1 UH (PAL/SECAM)	
18	1365687-46	L1	INDUCTOR, VAR, 14.2 UH (NTSC/PAL-M)	
19	1365687-44	L1	INDUCTOR, VAR, 11.8 UH (PAL/SECAM)	
21	250-188		BUMPER, PAD, BLK RBR, ADH BACK	
22	1366188-23	T3	TRANSFORMER, VAR, 34.3 UH (NTSC/PAL-M)	
23	1366188-20	T3	TRANSFORMER, VAR, 28.6 UH (PAL/SECAM)	
24	1366188-24	T2	TRANSFORMER, VAR, 35.5 UH (NTSC/PAL-M)	
25	1366188-21	T2	TRANSFORMER, VAR, 29.6 UH (PAL/SECAM)	
26	1366188-25	T1	TRANSFORMER, VAR, 36.1 UH (NTSC/PAL-M)	
27	1366188-22	T1	TRANSFORMER, VAR, 30.1 UH (PAL/SECAM)	
28	103307-02		STANDOFF, 0.125 LG, REF: C82	
30	013-689	CR1-6	DIODE	FD600
32	014-247	Q27	TRANSISTOR	2N2219
33	014-364	Q28	TRANSISTOR	2N2905A
34	014-505	Q8,9,11,12,14, 18-20,24,25,29	TRANSISTOR	2N3251
35	014-506	Q10,15-17,21,23, 26	TRANSISTOR	2N2501
38	014-576	Q1	TRANSISTOR	2N2784
39	014-581	Q6,7	TRANSISTOR	2N2369A
42	014-613		HEATSINK, T0-5, REF: Q2	
46	014-738	Q4,5,22	TRANSISTOR	2N4260
47	014-852	Q2,3,13	TRANSISTOR	MD2369A
48	1375287		SCHEMATIC, LOW BAND COLOR	

J

ASSEMBLY NO. 1373058 TITLE DEMODULATOR PWA, MODULE NO. 16

ITEM NO.	AMPEX PART NO.	REFERENCE NUMBER	DESCRIPTION	JEDEC NO. OR MFR. PART NO.
50	030-057	C1,2,4,5,10,13, 14,16,17,19,25, 27,28,31,32,33,35, 36,38,68,74,84,85	CAPACITOR, CER, DISC, 0.01 UF, 100V, 20%	
52	030-094	C29,39,49,54	CAPACITOR, CER, MONO, 1.0 UF, 25V, 20%	
54	030-223	C48,57,58,72,73,97	CAPACITOR, CER, MONO, 2.2 UF, 25V, 20%	
57	034-185	C81	CAPACITOR, MICA, 75 PF, 500V, 5% (LOW BAND COLOR)	
58	034-153	C66,78	CAPACITOR, MICA, 1000 PF, 500V, 5%	
59	034-156	C44	CAPACITOR, MICA, 5 PF, 500V, ±0.5 PF	
60	034-181	C80	CAPACITOR, MICA, 47 PF, 500V, 5% (NTSC, PAL-M)	
61	034-182	C30	CAPACITOR, MICA, 56 PF, 500V, 5% (NTSC, PAL-M, LOW BAND COLOR)	
64	034-215	C40,41	CAPACITOR, MICA, 10 PF, 500V, ±0.5 PF (NTSC, PAL-M, LOW BAND COLOR)	
65	034-215	C41,56,64	CAPACITOR, MICA, 10 PF, 500V, ±0.5 PF (PAL/SECAM)	
66	034-540	C3,15,26,34	CAPACITOR, MICA, 51 PF, 500V, 1% (NTSC, PAL-M)	
67	034-540	C3,11,15,26,34	CAPACITOR, MICA, 51 PF, 500V, 1% (PAL/SECAM)	
68	034-182	C30,80,81	CAPACITOR, MICA, 56 PF, 500V, 5% (PAL/SECAM)	
69	034-289	C51,52,92	CAPACITOR, MICA, 1200 PF, 500V, 5%	
70	034-312	C69	CAPACITOR, MICA, 6200 PF, 300V, 1%	
71	034-363	C67	CAPACITOR, MICA, 2000 PF, 500V, 1%	
72	034-388	C91	CAPACITOR, MICA, 3300 PF, 500V, 5%	
73	034-923	C79	CAPACITOR, MICA, 2700 PF, 500V, 5% (PAL/SECAM)	
74	034-930	C50,53,65	CAPACITOR, MICA, 680 PF, 300V, 5%	
76	034-941	C80	CAPACITOR, MICA, 51 PF, 500V, 5% (LOW BAND COLOR)	
77	034-922	C79	CAPACITOR, MICA, 2400 PF, 500V, 5% (LOW BAND COLOR)	
78	034-939	C23	CAPACITOR, MICA, 91 PF, 500V, 5%	
79	034-941	C81	CAPACITOR, MICA, 51 PF, 500V, 5% (NTSC, PAL-M)	
80	034-759	C20,56,64	CAPACITOR, MICA, 15 PF, 500V, ±0.5 PF (NTSC, PAL-M, LOW BAND COLOR)	
81	034-759	C20	CAPACITOR, MICA, 15 PF, 500V, ±0.5 PF (PAL/SECAM)	
82	034-958	C79	CAPACITOR, MICA, 2200 PF, 500V, 5% (NTSC, PAL-M)	
83	034-961	C24	CAPACITOR, MICA, 120 PF, 500V, 5%	
84	034-965	C87	CAPACITOR, MICA, 250 PF, 500V, 5%	
85	034-970	C90	CAPACITOR, MICA, 1500 PF, 500V, 5%	
89	035-734	C18,37	CAPACITOR, MYLAR, 0.01 UF, 50V, 5%	
91	035-828	C93,94	CAPACITOR, MYLAR, 0.022 UF, 50V, 5%	
93	035-893	C61,62,75,86,88	CAPACITOR, MYLAR, 0.1 UF, 50V, 5%	
96	037-109	C59,60	CAPACITOR, TANT, 10 UF, 20V, 10%	
97	037-164	C71	CAPACITOR, TANT, 1 UF, 35V, 10%	
98	037-186	C6,95	CAPACITOR, TANT, 120 UF, 10V, 10%	
100	037-746	C7,96	CAPACITOR, TANT, 47 UF, 20V, 10%	
101	037-985	C8,12,45,46	CAPACITOR, TANT, 15 UF, 20V, 10%	
102	037-136	C76,77	CAPACITOR, TANT, 39 UF, 10V, 10%	
104	038-052	C82	CAPACITOR, VAR, 0.8–12 PF, 750V	
107	041-001	R169	RESISTOR, COMP, 5100 OHM, 1/2W, 5%	
109	041-006	R24,55,109,118	RESISTOR, COMP, 620 OHM, 1/2W, 5%	J

ASSEMBLY NO. 1373058 TITLE DEMODULATOR PWA, MODULE NO. 16

ITEM NO.	AMPEX PART NO.	REFERENCE NUMBER	DESCRIPTION	JEDEC NO. OR MFR. PART NO.
110	041-008	R135	RESISTOR, COMP, 1.5K, 1/2W, 5%	
111	041-010	R81	RESISTOR, COMP, 2K, 1/2W, 5%	
112	041-013	R137	RESISTOR, COMP, 4.7K, 1/2W, 5%	
113	041-014	R80,113,114,153, 154,166	RESISTOR, COMP, 10K, 1/2W, 5%	
114	041-016	R148	RESISTOR, COMP, 22K, 1/2W, 5%	
115	041-017	R171	RESISTOR, COMP, 33K, 1/2W, 5%	
116	041-020	R79	RESISTOR, COMP, 47K, 1/2W, 5%	
117	041-023	R29,96	RESISTOR, COMP, 100K, 1/2W, 5%	
118	041-003	R10,11,155,156	RESISTOR, COMP, 100 OHM, 1/2W, 5%	
121	041-239	R91,108,128	RESISTOR, COMP, 2.2K, 1/2W, 5%	
122	041-245	R75,105,124,127, 157,159	RESISTOR, COMP, 1K, 1/2W, 5%	
123	041-283	R17,18,25,26,44, 45,49,50,56,57,84, 85,126,136,142, 165,168	RESISTOR, COMP, 47 OHM, 1/2W, 5%	
124	041-286	R173	RESISTOR, COMP, 1M, 1/2W, 5%	
125	041-291	R170	RESISTOR, COMP, 160 OHM, 1/2W, 5%	
126	041-316	R134	RESISTOR, COMP, 2.4K, 1/2W, 5%	
128	041-321	R83	RESISTOR, COMP, 200K, 1/2W, 5%	
129	041-334	R88	RESISTOR, COMP, 200 OHM, 1/2W, 5%	
130	041-336	R101,111,116,120, 163	RESISTOR, COMP, 470 OHM, 1/2W, 5%	
131	041-344	R12	RESISTOR, COMP, 390 OHM, 1/2W, 5%	
132	041-357	R167	RESISTOR, COMP, 5.6K, 1/2W, 5%	
133	041-384	R140	RESISTOR, COMP, 68 OHM, 1/2W, 5%	
134	041-397	R82	RESISTOR, COMP, 10M, 1/2W, 5%	
135	041-404	R112,115	RESISTOR, COMP, 510 OHM, 1/2W, 5%	
136	041-462	R110,117	RESISTOR, COMP, 1.3K, 1/2W, 5%	
137	041-473	R78	RESISTOR, COMP, 240 OHM, 1/2W, 5%	
138	041-475	R139	RESISTOR, COMP, 3K, 1/2W, 5%	
139	041-485	R22,23,53,54	RESISTOR, COMP, 16 OHM, 1/2W, 5%	
140	041-999	R161,162	RESISTOR, COMP, 560 OHM, 1W, 5%	
141	041-489	R9	RESISTOR, COMP, 33 OHM, 1/2W, 5%	
142	042-467	R175	RESISTOR, MF, 100K, 1/4W, 1% (PAL/SECAM)	
143	042-471	R14,48,69,102	RESISTOR, MF, 100 OHM, 1/4W, 1%	
144	042-478	R86	RESISTOR, MF, 200 OHM, 1/4W, 1%	
146	044-792	R1	RESISTOR, VAR, CER, 500 OHM, 1W, 10%	
147	044-873	R19	RESISTOR, VAR, CER, 1000 OHM, 1W, 10%	
149	048-256	R60,77,152	RESISTOR, MF, 3480 OHM, 1/4W, 1% (LOW BAND COLOR)	
150	048-256	R60	RESISTOR, MF, 3480 OHM, 1/4W, 1% (NTSC, PAL-M)	
151	048-256	R2,60	RESISTOR, MF, 3480 OHM, 1/4W, 1% (PAL/SECAM)	
152	048-257	R121,164	RESISTOR, MF, 3010 OHM, 1/4W, 1%	
153	048-259	R5,6,42,43,73, 132,133	RESISTOR, MF, 1000 OHM, 1/4W, 1%	
154	048-618	R2,123	RESISTOR, MF, 2000 OHM, 1/4W, 1% (NTSC, PAL-M, LOW BAND COLOR)	J

ITEM NO.	AMPEX PART NO.	REFERENCE NUMBER	DESCRIPTION	JEDEC NO. OR MFR. PART NO.
155	048-618	R123	RESISTOR, MF, 2000 OHM, 1/4W, 1% (PAL/SECAM)	
156	048-619	R106,107,129,130	RESISTOR, MF, 2490 OHM, 1/4W, 1%	
157	048-624	R138	RESISTOR, MF, 182 OHM, 1/4W, 1%	
158	048-625	R3,8,145,146	RESISTOR, MF, 150 OHM, 1/4W, 1%	
159	048-653	R131	RESISTOR, MF, 475 OHM, 1/4W, 1%	
160	048-662	R13,46,147	RESISTOR, MF, 3740 OHM, 1/4W, 1%	
162	048-671	R103	RESISTOR, MF, 422 OHM, 1/4W, 1% (PAL/SECAM)	
163	048-674	R16,47	RESISTOR, MF, 2150 OHM, 1/4W, 1%	
164	048-712	R15	RESISTOR, MF, 75 OHM, 1/4W, 1%	
165	048-722	R71	RESISTOR, MF, 56.2 OHM, 1/4W, 1%	
166	048-726	R72	RESISTOR, MF, 226 OHM, 1/4W, 1%	
167	048-727	R39	RESISTOR, MF, 499 OHM, 1/4W, 1%	
168	048-744	R40	RESISTOR, MF, 1150 OHM, 1/4W, 1%	
169	048-751	R51,52,58	RESISTOR, MF, 6040 OHM, 1/4W, 1%	
170	048-954	R104	RESISTOR, MF, 511 OHM, 1/4W, 1%	
171	048-955	R150	RESISTOR, MF, 47.5 OHM, 1/4W, 1%	
174	056-022	C40	CAPACITOR, MICA, 6.8 PF, 500V, ±0.5 PF (PAL/SECAM)	
175	056-109	C70	CAPACITOR, MICA, 8200 PF, 100V, 5%	
176	056-163	C89	CAPACITOR, MICA, 470 PF, 500V, 5%	
177	056-631	C55	CAPACITOR, MICA, 437 PF, 500V, 1% (NTSC, PAL-M)	
178	056-628	C55	CAPACITOR, MICA, 365 PF, 500V, 1% (PAL/SECAM)	
179	056-630	C63	CAPACITOR, MICA, 380 PF, 500V, 1% (NTSC, PAL-M)	
180	056-147	C63	CAPACITOR, MICA, 318 PF, 500V, 1% (PAL/SECAM)	
181	056-450	C9	CAPACITOR, MICA, 168 PF, 500V, 1% (NTSC, PAL-M)	
182	056-626	C9	CAPACITOR, MICA, 140 PF, 500V, 1% (PAL/SECAM)	
183	056-550	C47	CAPACITOR, MICA, 700 PF, 500V, 1% (HIGH BAND)	
184	034-540	C3,15,26,34,47	CAPACITOR, MICA, 51 PF, 500V, 1% (LOW BAND COLOR)	
185	056-405	C83	CAPACITOR, MICA, 53 PF, 500V, 1% (LOW BAND COLOR)	
186	056-365	C11	CAPACITOR, MICA, 71.8 PF, 500V, 1% (LOW BAND COLOR)	
187	034-880	C42	CAPACITOR, MICA, 78.2 PF, 500V, 1% (LOW BAND COLOR)	
188	056-422	C9	CAPACITOR, MICA, 186 PF, 500V, 1% (LOW BAND COLOR)	
189	056-524	C21	CAPACITOR, MICA, 217.5 PF, 500V, 1% (LOW BAND COLOR	
190	056-624	C11	CAPACITOR, MICA, 65 PF, 500V, 1% (NTSC, PAL-M)	
191	056-290	C63	CAPACITOR, MICA, 430 PF, 500V, 1% (LOW BAND COLOR)	
192	056-625	C42	CAPACITOR, MICA, 70 PF, 500V, 1% (NTSC, PAL-M)	
193	056-395	C42	CAPACITOR, MICA, 58.2 PF, 500V, 1% (PAL/SECAM)	
194	056-627	C21	CAPACITOR, MICA, 196 PF, 500V, 1% (NTSC, PAL-M)	
195	056-145	C21	CAPACITOR, MICA, 163 PF, 500V, 1% (PAL/SECAM)	
196	056-401	C43	CAPACITOR, MICA, 449 PF, 500V, 1% (NTSC, PAL-M)	
197	056-629	C43	CAPACITOR, MICA, 375 PF, 500V, 1% (PAL/SECAM)	
198	056-632	C83	CAPACITOR, MICA, 745.6 PF, 500V, ±0.25% (HIGH BAND)	
199	056-216	C55	CAPACITOR, MICA, 500 PF, 500V, 1% (LOW BAND COLOR)	
200	034-371	C43	CAPACITOR, MICA, 510 PF, 500V, 1% (LOW BAND COLOR)	
201	048-715	R76,151	RESISTOR, MF, 536 OHM, 1/4W, 1% (LOW BAND COLOR)	
202	057-042	R27,28,31,32,89, 90,94,95,92,119	RESISTOR, MF, 10K, 1/4W, 1%	J

ASSEMBLY NO. 1373058 TITLE DEMODULATOR PWA, MODULE NO. 16

ITEM NO.	AMPEX PART NO.	REFERENCE NUMBER	DESCRIPTION	JEDEC NO. OR MFR. PART NO.
203	057-173	R20,21	RESISTOR, MF, 5.62K, 1/4W, 1%	
204	057-175	R36,37,65-67, 98,99	RESISTOR, MF, 1.91K, 1/4W, 1%	
205	057-189	R149	RESISTOR, MF, 11.5K, 1/4W, 1% (PAL/SECAM)	
206	057-426	R70	RESISTOR, MF, 76.8 OHM, 1/4W, 1%	
207	057-670	R41	RESISTOR, MF, 12.4K, 1/4W, 1% (PAL/SECAM)	
208	057-673	R144	RESISTOR, MF, 16.5K, 1/4W, 1% (PAL/SECAM)	
209	057-675	R59,125	RESISTOR, MF, 301 OHM, 1/4W, 1%	
210	057-789	R38,68,100	RESISTOR, MF, 402 OHM, 1/4W, 1%	
211	057-797	R87	RESISTOR, MF, 8.66K, 1/4W, 1%	
212	057-910	R76,103	RESISTOR, MF, 549 OHM, 1/4W, 1% (NTSC, PAL-M)	
213	057-910	R76	RESISTOR, MF, 549 OHM, 1/4W, 1% (PAL/SECAM)	
214	057-914	R35,63,64,97	RESISTOR, MF, 2.87K, 1/4W, 1%	
215	057-979	R158,160	RESISTOR, MF, 147 OHM, 1/4W, 1%	
216	057-910	R103	RESISTOR, MF, 549 OHM, 1/4W, 1% (LOW BAND COLOR)	
217	058-170	R172	RESISTOR, VAR,CER, 10K, 1W, 10%	
218	058-423	R30	RESISTOR, VAR, CER, 200K, 1W, 10%	
219	062-413	R174	RESISTOR, MF, 4.22K, 1/4W, 1% (LOW BAND COLOR)	
220	048-620	R175	RESISTOR, MF, 4.75K, 1/4W, 1% (LOW BAND COLOR)	
221	062-393	R77	RESISTOR, MF, 825 OHM, 1/4W, 1% (HIGH BAND)	
222	062-416	R33,34,61,62	RESISTOR, MF, 40.2K, 1/4W, 1%	
223	062-441	R143	RESISTOR, MF, 280 OHM, 1/4W, 1% (PAL/SECAM)	
224	048-790	R122	RESISTOR, MF, 37.4K, 1/4W, 1%	
225	062-541	R7	RESISTOR, MF, 357 OHM, 1/4W, 1%	
226	048-672	R74	RESISTOR, MF, 332 OHM, 1/4W, 1% (LOW BAND COLOR)	
227	057-829	R143	RESISTOR, MF, 374 OHM, 1/4W, 1% (LOW BAND COLOR)	
228	066-785	R4	RESISTOR, MF, 127 OHM, 1/4W, 1%	
229	062-688	R74,143	RESISTOR, MF, 348 OHM, 1/4W, 1% (NTSC, PAL-M)	
230	062-688	R74	RESISTOR, MF, 348 OHM, 1/4W, 1% (PAL/SECAM)	
231	066-787	R151	RESISTOR, MF, 544 OHM, 1/4W, 0.25% (HIGH BAND)	
232	066-788	R152	RESISTOR, MF, 798.8 OHM, 1/4W, 0.25% (HIGH BAND)	
233	066-786	R41,141	RESISTOR, MF, 7680 OHM, 1/4W, 1% (NTSC, PAL-M, LOW BAND COLOR)	
234	066-786	R141	RESISTOR, MF, 7680 OHM, 1/4W, 1% (PAL/SECAM)	
235	066-757	R149	RESISTOR, MF, 14.3K, 1/4W, 1% (NTSC, PAL-M, LOW BAND COLOR)	
236	062-773	R144	RESISTOR, MF, 20.5K, 1/4W, 1% (NTSC, PAL-M, LOW BAND COLOR)	
239	058-893	R93	RESISTOR, VAR, CER, 200K, 1/2W, 10%	
246	139-037	J2	CONNECTOR, COAX	
248	143-981		JACK, CLOSED ENTRY, REF: J1, J3-7	
250	280-130		SPACER, XSTR, T0-18	
254	280-998		SPACER, XSTR, T0-5, REF: Q27,28	
255	473-325		SCREW ASSY, NO. 4-40 X 5/16	
256	051-889	L14	INDUCTOR, FIXED, 0.68 UH, ±10%	
257	540-004	L8	INDUCTOR, FIXED, 33 UH, ±5%	
				J

ASSEMBLY NO. 1373058 TITLE DEMODULATOR PWA, MODULE NO. 16

ITEM NO.	AMPEX PART NO.	REFERENCE NUMBER	DESCRIPTION	JEDEC NO. OR MFR. PART NO.
258	540-071	L3	INDUCTOR, FIXED, 120 UH, ±5%	
259	541-973	L13	INDUCTOR, FIXED, 1.0 UH, ±5%	
260	051-928	L6	INDUCTOR, FIXED, 75 UH, ±5%	
262	032-395		STRAP, CABLE, MOLDED	
264	586-124	A18,32,35	INTEGRATED CIRCUIT	UA710
265	586-167	A26	INTEGRATED CIRCUIT	SN74H10N
266	586-168	A6,27	INTEGRATED CIRCUIT	SN74H00N
267	586-249	A7	INTEGRATED CIRCUIT	CA3028A
268	586-225	A5,12,13,20,22, 30	INTEGRATED CIRCUIT	CA3019
269	586-261	A14	INTEGRATED CIRCUIT	LM302H
270	586-269	A21,29	INTEGRATED CIRCUIT	UA741HC
271	586-335	A15	INTEGRATED CIRCUIT	LM306H
272	586-473	A19	INTEGRATED CIRCUIT	MC1210L
273	586-488	A2,3,4,9,10,11	INTEGRATED CIRCUIT	MC1235L
274	586-489	A1,8	INTEGRATED CIRCUIT	MC1204L
275	586-533	A23,24,25,28,33, 34	INTEGRATED CIRCUIT	SN74121N
276	586-617	A16,31	INTEGRATED CIRCUIT	F9602
277	587-225	A17	INTEGRATED CIRCUIT	SN74L10N
280	580-634	Q4,5,10,11,21,22	HEATSINK, DUAL, T0-18	
281	1366188-31	T3	TRANSFORMER, VAR, 41.3 UH (LOW BAND COLOR)	
282	1366188-32	T2	TRANSFORMER, VAR, 42.3 UH (LOW BAND COLOR)	
283	1366188-33	T1	TRANSFORMER, VAR, 43.2 UH (LOW BAND COLOR)	
286	602-012		PLUG, SHORTING, REF: J1,3,4,5,6	
292	1373227-01		CONTACT, GROUND	
294	471-325		SCREW, FLAT HD, NO. 4-40 X 3/16	
296	496-004		NUT, ASSEMBLED, NO. 4	
298	501-169		WASHER, PLAIN, NO. 4	
300	932-035		BEAD, FERRITE, 1/8 IN, REF: BASE Q16,17,18,19	
302	1365687-12	L7	INDUCTOR, VAR, 2.78 UH (LOW BAND COLOR)	
303	1365687-40	L9	INDUCTOR, VAR, 3.25 UH (LOW BAND COLOR)	
304	1365687-17	L11	INDUCTOR, VAR, 3.72 UH (LOW BAND COLOR)	
305	1365687-52	L4	INDUCTOR, VAR, 13.9 UH (LOW BAND COLOR)	
306	1365687-53	L2	INDUCTOR, VAR, 15.0 UH (LOW BAND COLOR)	
307	1365687-54	L1	INDUCTOR, VAR, 15.7 UH (LOW BAND COLOR)	

J

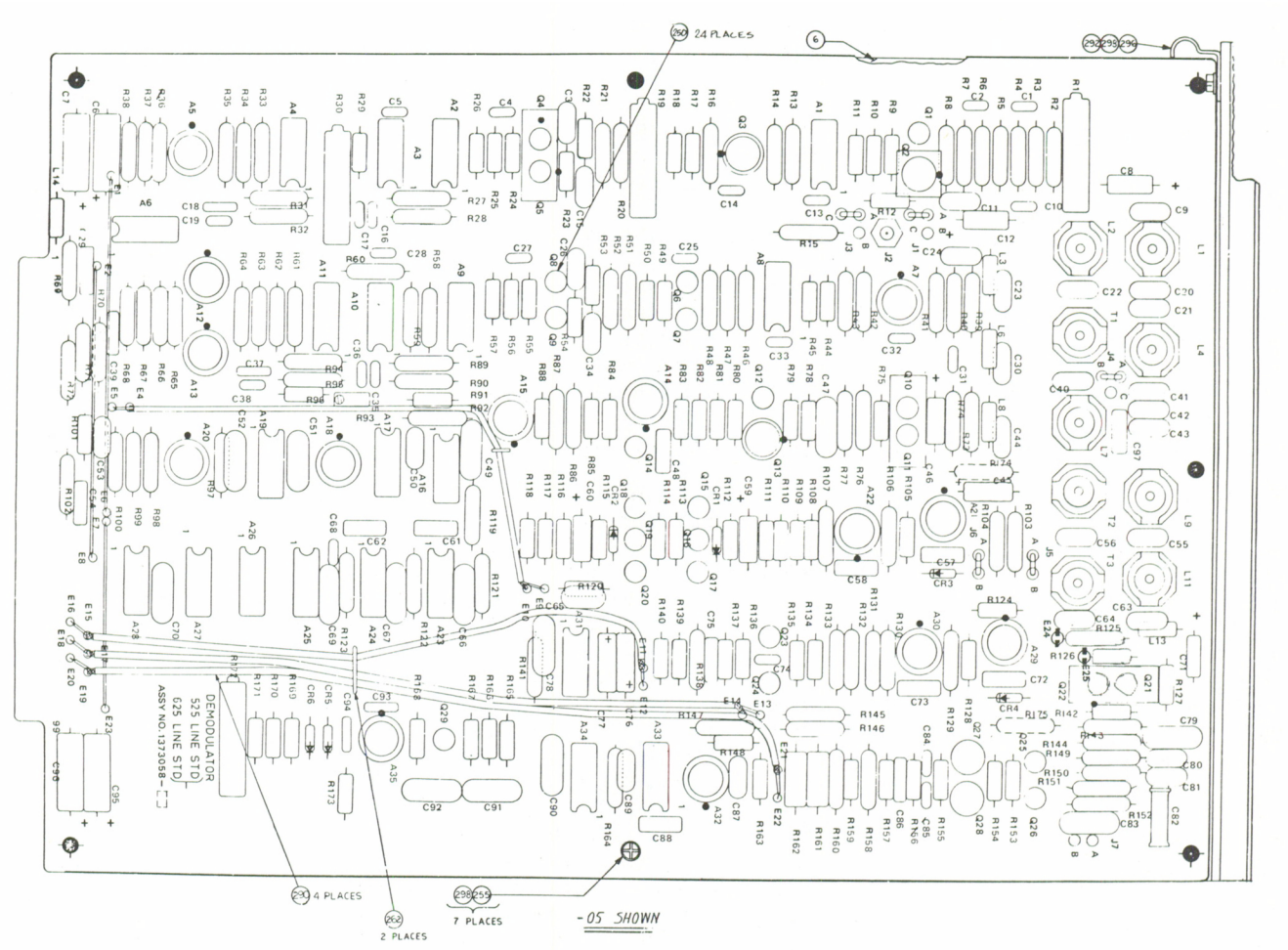

Assembly No. 1373058. Demodulator PWA, Module No. 16

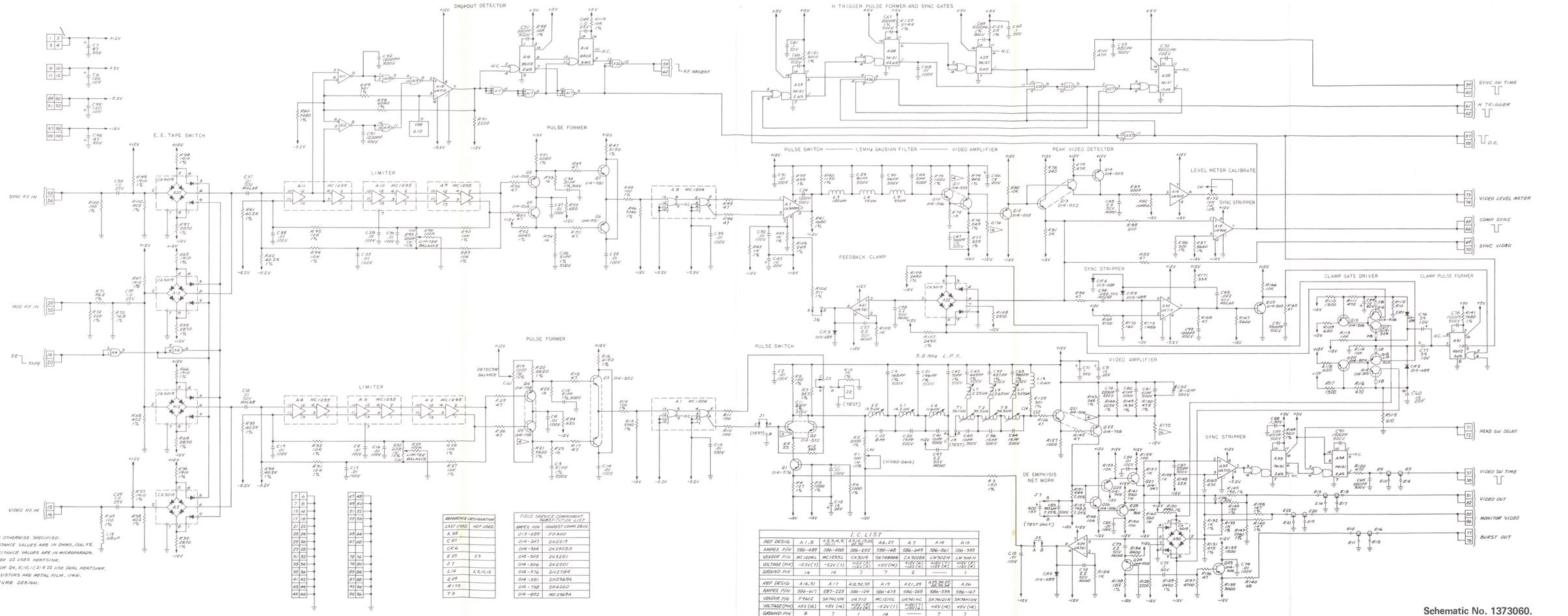

NOTES: UNLESS OTHERWISE SPECIFIED.
1. ALL RESISTANCE VALUES ARE IN OHMS, (10Ω), 5%.
2. ALL CAPACITANCE VALUES ARE IN MICROFARADS.
3. TRANSISTOR Q2 USES HEATSINK.
4. TRANSISTOR Q4, 5, 10, 11 & 22 USE DUAL HEATSINK.
5. ALL 1% RESISTORS ARE METAL FILM, 1/4W.
6. FOR FUTURE DESIGN.

REFERENCE DESIGNATION	
LAST USED	HOT USED
A 35	
C 97	
CR 6	
E 25	E 5
J 7	
L 14	L 5, 10, 12
Q 29	
R 175	
T 3	

FIELD SERVICE COMPONENT SUBSTITUTION LIST	
AMPEX P/N	NEAREST COMM. EQUIV.
013-689	FD 600
014-247	2N2219
014-364	2N2905A
014-505	2N3251
014-506	2N2501
014-516	2N2784
014-551	2N2369A
014-738	2N4260
014-852	MD2369A

I. C. LIST

REF DESIG	A1, 8	A2, 3, 4, 9, 12	A5, 6, 7, 10, 11	A6, 27	A7	A14	A15
AMPEX P/N	586-489	586-480	586-255	586-168	586-249	586-561	586-395
VENDOR P/N	MC1204L	MC1295L	CA3049	SN74800N	CA3028A	LM302H	LM 306 H
VOLTAGE (PIN)	-5.2V(7)	-5.2V (7)	+12V (8) -5.2V (1)	+5V (14)	+12V (6) -5.2V (3)	+12V (7) -12V (4)	+12V (8) -12V (4)
GROUND PIN	14	14	7	7	2	——	1

REF DESIG	A16, 31	A17	A18, 32, 35	A19	A21, 29	A23, 24, 25, 28, 33, 34	A26
AMPEX P/N	586-617	587-225	586-124	586-673	586-249	586-593	586-167
VENDOR P/N	F9602	SN74LI0N	UA710	MC1010L	UA741HC	SN74121N	SN74H10N
VOLTAGE (PIN)	+5V (16)	+5V (14)	+12V (8) -5.2V (4)	-5.2V (1)	+12V (7) -12V (4)	+5V (14)	+5V (14)
GROUND PIN	8	7	1	14	——	7	7

Schematic No. 1373060.
Demodulator PWA, High Band,
NTSC/PAL-M, Module No. 16

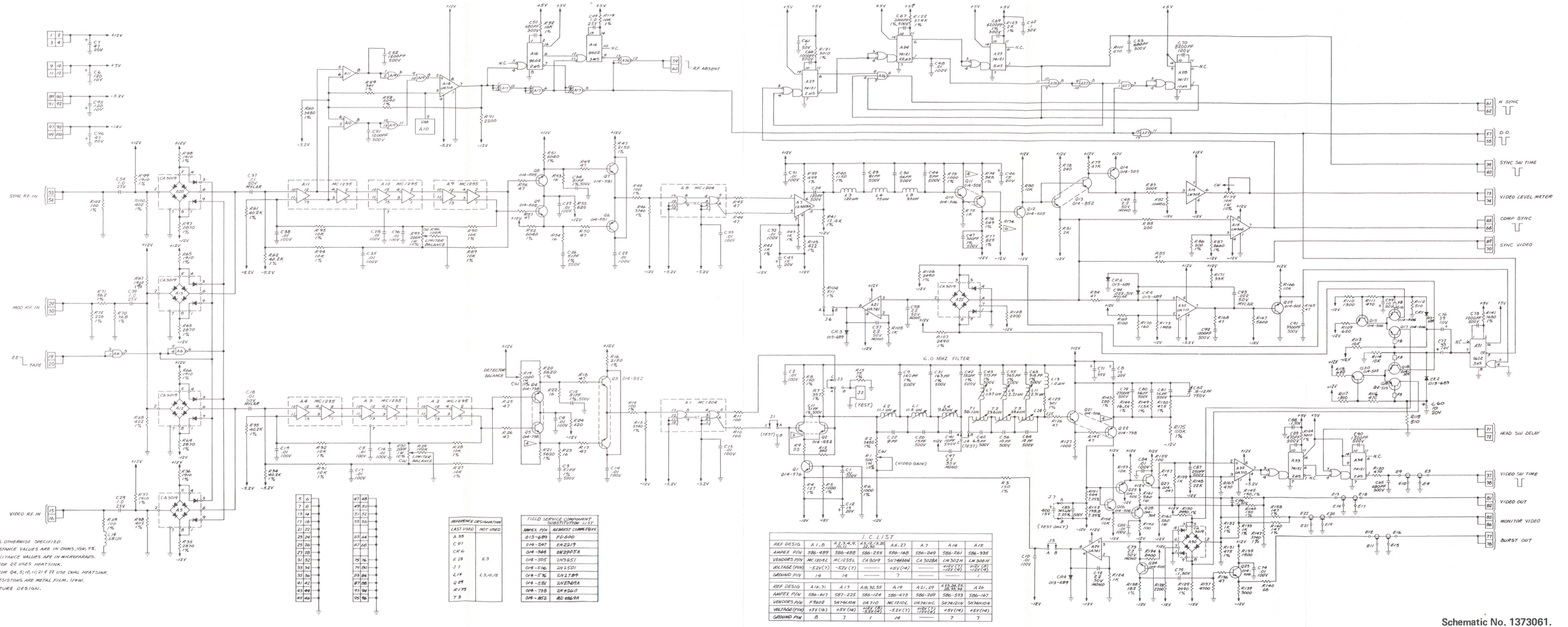

REFERENCE DESIGNATION	
LAST USED	NOT USED
A 35	
C 91	
CR 6	
E 28	E3
J 7	
L 14	L5,10,12
Q 29	
R 175	
T 3	

FIELD SERVICE COMPONENT SUBSTITUTION LIST	
AMPEX P/N	REPAIRSET COMPATIBLE
013-689	FD 600
014-347	EN 2219
014-386	2N 2905A
014-502	2N 3251
014-506	2N 2501
014-536	SN 2784
014-581	2N 3640A
014-738	2N 4260
014-852	AD 2166A

I.C. LIST

REF DESIG	A1,8	A2,3,4,9, 10,11	A5,6,7,13, 30,36	A6,27	A7	A14	A15
AMPEX P/N	586-489	586-488	586-255	586-168	586-249	586-261	586-935
VENDORS P/N	MC1204C	MC1235L	CA3019	SN74H60N	CA3028A	LM302H	LM306H
VOLTAGE (PIN)	-12V(7)	-12V(7)	———	+12V(14)	———	+15V(7) -12V(4)	+15V(7) -12V(4)
GROUND P/N	14	14	———	7	———	1	1
REF DESIG	A14,31	A17	A18,32,35	A19	A21,29	A23,24,25, 28,33,34	A26
AMPEX P/N	586-847	587-225	586-124	586-473	586-269	586-533	586-167
VENDORS P/N	F9602	SN74H10N	UA710	MC1210L	UA741HC	SN74H21N	SN74H10N
VOLTAGE (PIN)	+5V(16)	+5V(14)	+12V(8) -5.2V(4)	-5.2V(7)	+12V(7) -15V(4)	+5V(14)	+5V(14)
GROUND P/N	8	7	1	14	———	7	7

Schematic No. 1373061.
Demodulator PWA, High Band,
PAL/SECAM, Module No. 16

AMPEX 1809178-02

11-145/146

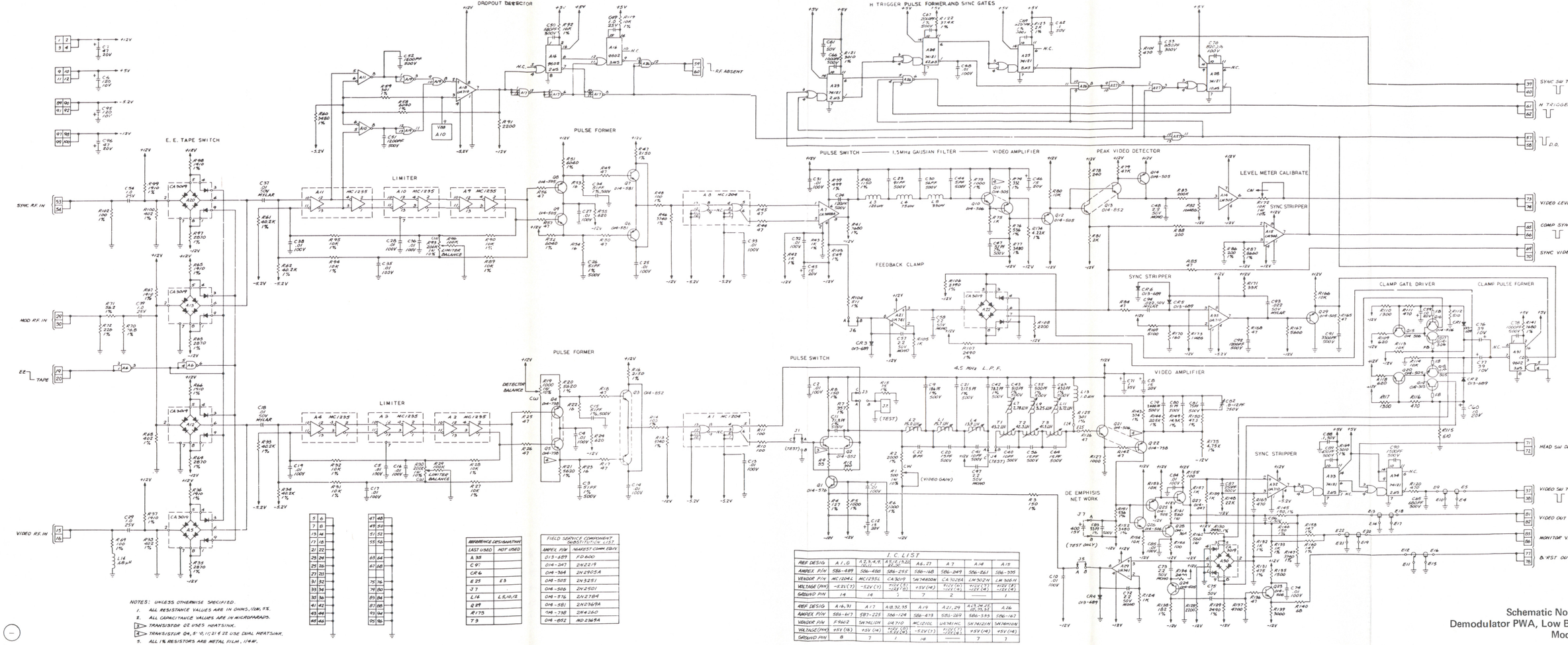

NOTES: UNLESS OTHERWISE SPECIFIED.
1. ALL RESISTANCE VALUES ARE IN OHMS, 1/2W, 5%.
2. ALL CAPACITANCE VALUES ARE IN MICROFARADS.
3. ▷ TRANSISTOR Q2 USES HEATSINK.
4. ▷ TRANSISTOR Q4, 5, 9, 11, 21 & 22 USE DUAL HEATSINK.
5. ALL 1% RESISTORS ARE METAL FILM, 1/4W.

REFERENCE DESIGNATION	
LAST USED	NOT USED
A 35	
C 91	
CR 6	
E 25	E 3
J 7	
L 16	L 5, 10, 12
Q 29	
R 175	
T 3	

FIELD SERVICE COMPONENT SUBSTITUTION LIST	
AMPEX P/N	NEAREST COMM EQUIV
013-689	FD 600
014-247	2N2219
014-368	2N2905A
014-505	2N3251
014-506	2N2501
014-576	2N2784
014-581	2N2369A
014-738	2N4260
014-852	MD2369A

I.C. LIST

REF DESIG	A1, 0	A2, 3, 4, 9, 20, 23	A5, 6, 7, 8, 22, 26	A6, 27	A7	A14	A15
AMPEX P/N	586-489	586-480	586-255	586-168	586-249	506-261	586-395
VENDOR P/N	MC1204L	MC1235L	CA3019	SN74H00N	CA3028A	LM302H	LM 306 H
VOLTAGE (PIN)	-12V (7)	-12V (7)	+12V (5) -12V (3)	+5V (14)	+12V (6) -12V (4)	+12V (7) -12V (4)	+12V (7) -12V (4)
GROUND PIN	14	14	1	7	2	——	1

REF DESIG	A16, 31	A17	A18, 32, 35	A19	A21, 29	A24, 34, 25, 30, 33, 35	A28
AMPEX P/N	586-467	587-225	586-124	586-473	585-269	586-395	586-467
VENDOR P/N	F9602	SN74LS09	UA710	MC1210C	UA741HC	SN74H22N	SN74H10N
VOLTAGE (PIN)	+5V (16)	+5V (14)	+12V (5) -12V (4)	-12V (7)	+12V (7) -12V (4)	+5V (14)	+5V (14)
GROUND PIN	8	7	1	14	——	7	7

Schematic No. 1375287.
Demodulator PWA, Low Band Color,
Module No. 16

ITEM NO.	AMPEX PART NO.	REFERENCE NUMBER	DESCRIPTION	JEDEC NO. OR MFR. PART NO.
	1374165-02		VIDEO INPUT MODULE ASSEMBLY, NTSC/PAL-M	
2	1373285-17		OVERLAY	
3	1373272-01		SHIELD, PWB	
4	1373273-13		HANDLE, MODULE	
5	1373227-01		CONTACT, GND	
6	471-325		SCREW, MACH, FLAT HD, NO. 4-40 X 0.188 LG	
7	473-325		SCREW, MACH, PAN HD, XREC, NO. 4-40 X 0.325 LG	
8	496-004		NUT, KEP, NO. 4	
9	501-169		WASHER, PLAIN, NO. 4	
10	058-459	R200	RESISTOR, VAR, 5K	
11	119-259	S1	SWITCH, SPDT	
12	6000001-20		KNOB, BLK	
14	250-188		BUMPER, PAD	
15	1374010-02		VIDEO INPUT PWA	
				D

SHEET 1 OF 1

ITEM NO.	AMPEX PART NO.	REFERENCE NUMBER	DESCRIPTION	JEDEC NO. OR MFR. PART NO.
	1374010-02		VIDEO INPUT PWA, BD NO. 17, NTSC/PAL-M	
3	1374012		SCHEMATIC	
4	1374107-01	T1	TRANSFORMER, ADJ	
7	013-257	VR1,6,9	DIODE	1N753A
8	013-332	VR5,8	DIODE	1N750A
9	013-358	VR3	DIODE	1N751A
10	013-371	VR7	DIODE	IN964B
11	013-599	CR1,2	DIODE	1N914
12	013-972	CR3,4	DIODE	F1004
13	013-983	VR2,4	DIODE	IN752A
17	014-505	Q4-6,9,10,11,13, 16,19,20,24,25,30	TRANSISTOR	2N3251
18	014-506	Q1,2,14,15,17, 21-23,27-29,31, 32,34,35	TRANSISTOR	2N2501
19	014-581	Q3,7,12,18,33	TRANSISTOR	2N2369A
20	014-852	Q26	TRANSISTOR	MD2369A
21	580-319	Q8	TRANSISTOR	2N5555
23	030-056	C1,3,11-13,16, 19-21,23-27, 37-41,44,46-49, 52,53,59,62,71	CAPACITOR, CER, 0.02 MFD, 100V	
24	030-223	C17	CAPACITOR, MONO, 2.2 MFD, 25V	
25	030-963	C31,45,50,56, 60,70,74,75	CAPACITOR, CER, 0.1 MFD, 100V	
27	034-221	C34,36	CAPACITOR, MICA, 200 PF, 500V, 1%	
28	034-222	C15,63	CAPACITOR, MICA, 100 PF, 500V, 1%	
29	034-239	C65	CAPACITOR, MICA, 130 PF, 500V, 1%	
30	034-243	C8,42	CAPACITOR, MICA, 3000 PF, 500V, 1%	
31	034-252	C64	CAPACITOR, MICA, 82 PF, 500V, 1%	
32	034-253	C33,35,58	CAPACITOR, MICA, 330 PF, 500V, 1%	
33	034-285	C55	CAPACITOR, MICA, 75 PF, 500V, 1%	
34	034-297	C22	CAPACITOR, MICA, 180 PF, 500V, 1%	
35	034-688	C66	CAPACITOR, MICA, 30 PF, 500V, ±5 PF	
36	034-919	C67	CAPACITOR, MICA, 270 PF, 500V, 1%	
37	037-367	C14,18,57	CAPACITOR, TANT, 2.2 MFD, 20V, 10%	
38	037-726	C54	CAPACITOR, TANT, 3.3 MFD, 15V, 10%	
39	037-991	C4,30,43,51,69, 72,76,77,80	CAPACITOR, TANT, 22 MFD, 15V, 10%	
42	044-944	R121	RESISTOR, VAR, 5K	
43	044-945	R3,7,73,78,126	RESISTOR, VAR, 10K	
46	051-681	L8	INDUCTOR, VAR, 1 UH	
47	051-680	L9	INDUCTOR, VAR, 1.5 UH	
50	055-131	C32	CAPACITOR, MYLAR, 0.039 MFD, 50V, 5%	
				H

ASSEMBLY NO. 1374010 TITLE VIDEO INPUT PWA, BD NO. 17, NTSC/PAL-M

ITEM NO.	AMPEX PART NO.	REFERENCE NUMBER	DESCRIPTION	JEDEC NO. OR MFR. PART NO.
51	055-133	C5,9	CAPACITOR, MYLAR, 0.0022 MFD, 50V, 5%	
52	055-195	C61	CAPACITOR, MYLAR, 0.0068 MFD, 50V, 5%	
53	056-164	C68	CAPACITOR, MICA, 22 PF, 500V, +0.5 PF	
54	056-290	C2,6,7,10,28,79	CAPACITOR, MICA, 430 PF, 500V, 1%	
55	056-488	C29	CAPACITOR, MICA, 10 PF, 500V, +0.5 PF	
56	056-580	C73	CAPACITOR, MICA, 12 PF, 500V, +0.5 PF	
57	056-603	C78	CAPACITOR, MICA, 47 PF, 500V, +0.5 PF	
60	057-055	R65	RESISTOR, MF, 20 OHM, 1/4W, 2%	
61	057-056	R23,127	RESISTOR, MF, 22 OHM, 1/4W, 2%	
62	057-064	R14,19,20,31,42, 46,62,67-69,72, 119,120	RESISTOR, MF, 47 OHM, 1/4W, 2%	
63	057-065	R41	RESISTOR, MF, 51 OHM, 1/4W, 2%	
64	057-069	R17,18,101	RESISTOR, MF, 75 OHM, 1/4W, 2%	
65	057-072	R90,94,117	RESISTOR, MF, 100 OHM, 1/4W, 2%	
66	057-074	R103	RESISTOR, MF, 120 OHM, 1/4W, 2%	
67	057-075	R129	RESISTOR, MF, 130 OHM, 1/4W, 2%	
68	057-076	R40,70	RESISTOR, MF, 150 OHM, 1/4W, 2%	
69	057-077	R128	RESISTOR, MF, 160 OHM, 1/4W, 2%	
70	057-078	R131	RESISTOR, MF, 180 OHM, 1/4W, 2%	
71	057-079	R63,95	RESISTOR, MF, 200 OHM, 1/4W, 2%	
72	057-083	R21,96,133	RESISTOR, MF, 300 OHM, 1/4W, 2%	
73	057-084	R53,87	RESISTOR, MF, 330 OHM, 1/4W, 2%	
74	057-085	R100	RESISTOR, MF, 360 OHM, 1/4W, 2%	
75	057-086	R138	RESISTOR, MF, 390 OHM, 1/4W, 2%	
76	057-091	R52,54,77,136, 143	RESISTOR, MF, 620 OHM, 1/4W, 2%	
77	057-092	R145,146	RESISTOR, MF, 680 OHM, 1/4W, 2%	
78	057-093	R28,144,147	RESISTOR, MF, 750 OHM, 1/4W, 2%	
79	057-096	R10,24,25,32,33, 38,55,57,61,66,83, 89,93,111,115, 118,132,142	RESISTOR, MF, 1K, 1/4W, 2%	
80	057-098	R22,81,99	RESISTOR, MF, 1.2K, 1/4W, 2%	
81	057-100	R4,43,74	RESISTOR, MF, 1.5K, 1/4W, 2%	
82	057-102	R27,49,59,109	RESISTOR, MF, 1.8K, 1/4W, 2%	
83	057-103	R51,58,60,82,88, 91,92,107,122	RESISTOR, MF, 2K, 1/4W, 2%	
84	057-104	R16,37,45,64,86, 110,114	RESISTOR, MF, 2.2K, 1/4W, 2%	
85	057-105	R11,56,84	RESISTOR, MF, 2.4K, 1/4W, 2%	
86	057-106	R26	RESISTOR, MF, 2.7K, 1/4W, 2%	
87	057-107	R30	RESISTOR, MF, 3K, 1/4W, 2%	
				H

ASSEMBLY NO. 1374010 TITLE VIDEO INPUT PWA, BD NO. 17, NTSC/PAL-M

ITEM NO.	AMPEX PART NO.	REFERENCE NUMBER	DESCRIPTION	JEDEC NO. OR MFR. PART NO.
88	057-108	R76,97,98,140	RESISTOR, MF, 3.3K, 1/4W, 2%	
89	057-109	R12,29,85	RESISTOR, MF, 3.6K, 1/4W, 2%	
90	057-110	R113,137,141	RESISTOR, MF, 3.9K, 1/4W, 2%	
91	057-112	R44,80	RESISTOR, MF, 4.7K, 1/4W, 2%	
92	057-113	R75,112	RESISTOR, MF, 5.1K, 1/4W, 2%	
93	057-114	R36,39,71	RESISTOR, MF, 5.6K, 1/4W, 2%	
94	057-115	R1,48	RESISTOR, MF, 6.2K, 1/4W, 2%	
95	057-116	R125	RESISTOR, MF, 6.8K, 1/4W, 2%	
96	057-117	R139	RESISTOR, MF, 7.5K, 1/4W, 2%	
97	057-120	R2,8,35,50,124	RESISTOR, MF, 10.0K, 1/4W, 2%	
98	057-121	R123	RESISTOR, MF, 11.0K, 1/4W, 2%	
99	057-127	R5,34,79	RESISTOR, MF, 20K, 1/4W, 2%	
100	057-144	R116	RESISTOR, MF, 100K, 1/4W, 2%	
103	062-836	R15,47,130	RESISTOR, MF, 75 OHM, 1/8W, 1%	
105	062-884	R104,105,106	RESISTOR, MF, 301 OHM, 1/8W, 1%	
106	062-894	R13,108	RESISTOR, MF, 402 OHM, 1/8W, 1%	
107	062-968	R102	RESISTOR, MF, 4.99K, 1/8W, 1%	
109	066-599	R9	RESISTOR, MF, 12.7K, 1/8W, 1%	
111	066-752	R134	RESISTOR, MF, 11.8K, 1/8W, 1%	
112	066-802	R6	RESISTOR, MF, 9.76K, 1/8W, 1%	
113	066-790	R135	RESISTOR, MF, 158 OHM, 1/8W, 1%	
116	143-981		JACK, CLOSED ENTRY, REF: J1-3A,B,C,J4A,B,J5A,B,C,E40	
120	226-035	L1,2,5,6,7,10	CORE, SIX APERTURE	
122	280-130		SPACER, XSTR, T0-18, REF: Q1-9,13,15-20,22-25,27-33	
124	302-295		CABLE, STRAP	
126	541-068	L3,4	INDUCTOR, VAR, 10 UH, 20%	
128	586-121	A19	INTEGRATED CIRCUIT	UA711A
129	586-124	A24	INTEGRATED CIRCUIT	UA710C
130	586-276	A31	INTEGRATED CIRCUIT	CA3046
131	586-447	A14	INTEGRATED CIRCUIT	CA3026
132	586-168	A3,7,13,15,21,27,30	INTEGRATED CIRCUIT	SN74H00N
133	586-533	A1,2,5,6,8,10,16, 17,20,23,28,33, 34	INTEGRATED CIRCUIT	SN74121N
134	586-167	A9,22,26,29	INTEGRATED CIRCUIT	SN74H10N
135	586-700	A12,25,32	INTEGRATED CIRCUIT	SN74H74N
136	586-688	A4,11,18	INTEGRATED CIRCUIT	SN74H04N
139	602-012		PLUG, SHORTING, REF: J1-5	
146	932-034	FB1-FB2	BEAD, FERRITE, 0.250 LG	
147	932-035		BEAD, FERRITE, 0.125 LG	

H

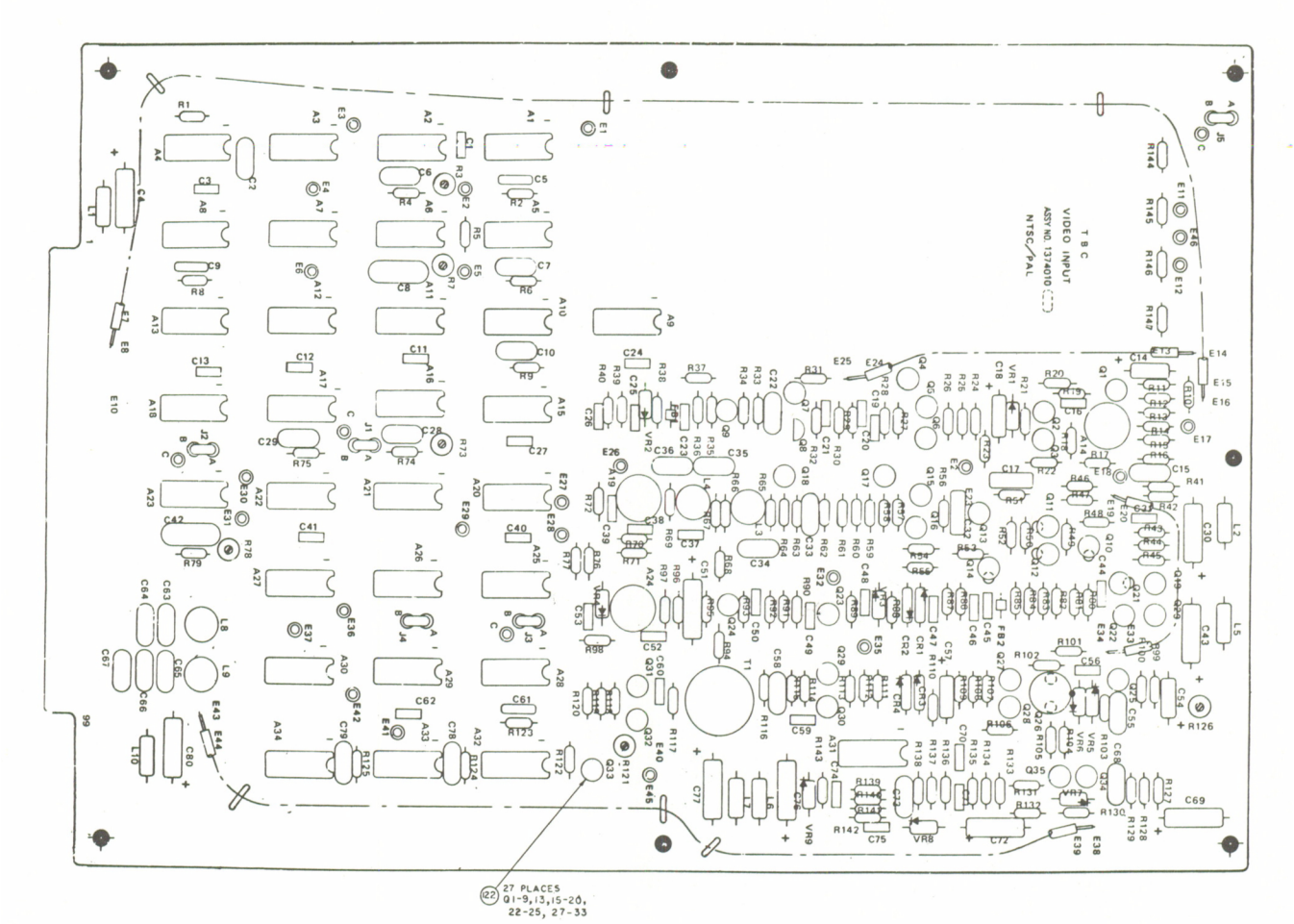

Assembly No. 1374010. Video Input PWA, Board No. 17, NTSC/PAL-M

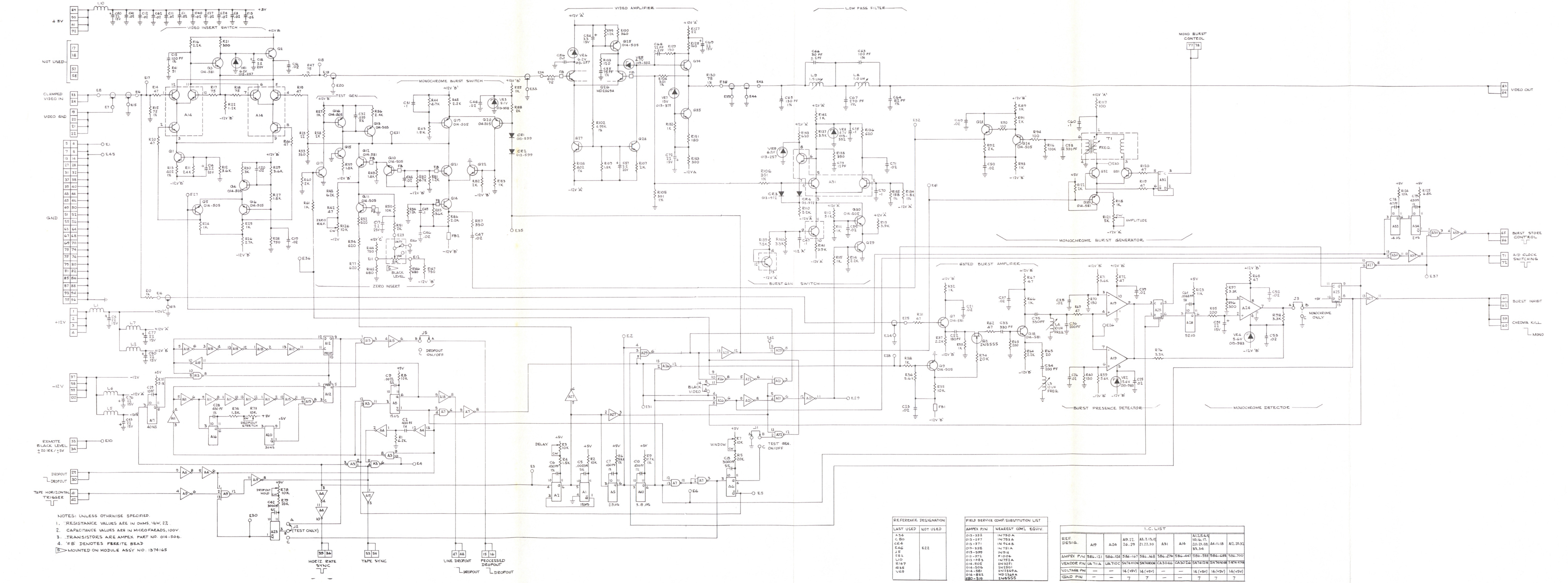

NOTES: UNLESS OTHRWISE SPECIFIED.

1. RESISTANCE VALUES ARE IN OHMS, 1/4W, 2%.
2. CAPACITANCE VALUES ARE IN MICROFARADS, 100V.
3. TRANSISTORS ARE AMPEX PART NO. 014-506.
4. 'FB' DENOTES FERRITE BEAD
5. ▷ MOUNTED ON MODULE ASS'Y NO. 1374165

REFERENCE DESIGNATION	
LAST USED	NOT USED
A34	E22
C80	
CR4	
E46	
J5	
FB2	
L10	
R147	
Q35	
VR9	

FIELD SERVICE COMP. SUBSTITUTION LIST	
AMPEX P/N	NEAREST COM'L EQUIV.
013-332	IN750A
013-257	IN753A
013-371	IN964B
013-358	IN751A
013-599	IN914
013-972	F1004
013-983	IN752A
014-505	2N3251
014-506	2N2501
014-581	2N2369A
014-852	MD2369A
580-319	2N5555

I.C. LIST									
REF. DESIG.	A19	A24	A9, 22, 26, 29	A3, 7, 13, 15, 21, 27, 30	A31	A14	A1, 2, 5, 6, 8, 10, 16, 17, 20, 23, 28, 33, 34	A4, 11, 18	A12, 25, 32
AMPEX P/N	586-121	586-124	586-167	586-168	586-276	586-447	586-533	586-688	586-700
VENDOR P/N	UA711A	UA710C	SN74H10N	SN74H00N	CA3046	CA3026	SN74121N	SN74H04N	SN74H74N
VOLTAGE PIN	—	—	14 (+5V)	14 (+5V)	—	—	14 (+5V)	14 (+5V)	14 (+5V)
GND PIN	—	—	7	7	—	—	7	7	7

B

Schematic No. 1374012.
Video Input PWA, NTSC/PAL-M,
Board No. 17

ITEM NO.	AMPEX PART NO.	REFERENCE NUMBER	DESCRIPTION	JEDEC NO. OR MFR. PART NO.
	1374166-02		VIDEO INPUT MODULE ASSEMBLY, PAL/SECAM	
2	1373285-17		OVERLAY	
3	1373272-01		SHIELD, PWB	
4	1373273-13		HANDLE, MODULE	
5	1373227-01		CONTACT, GND	
6	471-325		SCREW, MACH, FLAT HD, NO. 4-40 X 0.188 LG	
7	473-325		SCREW, MACH, PAN HD, XREC, NO. 4-4- X 0.325 LG	
8	496-004		NUT, KEP, NO. 4	
9	501-169		WASHER, PLAIN, NO. 4	
10	058-459	R200	RESISTOR, VAR, 5K	
11	119-259	S1	SWITCH, SPDT	
12	6000001-20		KNOB, BLK	
14	250-188		BUMPER, PAD	
15	1374014-02		VIDEO INPUT PWA	
				B

SHEET 1 OF 1

ITEM NO.	AMPEX PART NO.	REFERENCE NUMBER	DESCRIPTION	JEDEC NO. OR MFR. PART NO.
	1374014-02		VIDEO INPUT PWA, BD NO. 17, PAL/SECAM	
3	1374016		SCHEMATIC	
6	1374107-01	T1	TRANSFORMER, ADJUSTABLE	
9	013-257	VR2,7,10	DIODE, ZENER	1N753A
10	013-332	VR6,9	DIODE, ZENER	1N750A
11	013-358	VR4	DIODE, ZENER	1N751A
12	013-371	VR8	DIODE, ZENER	1N964B
13	013-983	VR1,3,5	DIODE, ZENER	1N752A
14	013-599	CR7,8	DIODE	1N914
15	013-972	CR1-6,9,10	DIODE	FD1004
17	226-035	L3,4,7,10,13, 14,15	CORE, SIX APERTURE, FED: 1374188-01	
20	014-505	Q7-9,12-14,16, 19,22,23,27,28, 33	TRANSISTOR	2N3251
21	014-506	Q4,5,17,18,20, 24-26,30-32,34-37	TRANSISTOR	2N2501
22	014-581	Q1-3,6,10,15,21, 38	TRANSISTOR	2N2369A
23	014-852	Q29	TRANSISTOR	MD2369A
24	580-319	Q11	TRANSISTOR	2N5555
28	030-056	C4,6,9,16,22,24, 26-28,31,34-36, 38-41,51,54,55, 58,60-64,66,67, 77,81,86	CAPACITOR, CER, 0.02 MFD, 100V	
30	030-223	C14,32	CAPACITOR, MONO, 2.2 MFD, 25V	
31	030-963	C21,45,59,75, 79,85,88,89	CAPACITOR, CER, 0.1 MFD, 100V	
38	056-488	C43	CAPACITOR, MICA, 10 PF, 500V, ±0.5 PF	
39	056-580	C87	CAPACITOR, MICA, 12 PF, 500V, ±0.5 PF	
40	056-164	C83	CAPACITOR, MICA, 22 PF, 500V, ±0.5 PF	
41	034-688	C71	CAPACITOR, MICA, 30 PF, 500V, ±0.5 PF	
42	056-603	C92	CAPACITOR, MICA, 47 PF, 500V, ±0.5 PF	
43	034-918	C2,12	CAPACITOR, MICA, 68 PF, 500V, 1%	
44	034-285	C74	CAPACITOR, MICA, 75 PF, 500V, 1%	
45	034-252	C69	CAPACITOR, MICA, 82 PF, 500V, 1%	
46	034-222	C30,68	CAPACITOR, MICA, 100 PF, 500V, 1%	
47	034-219	C11,48,50	CAPACITOR, MICA, 120 PF, 500V, 1%	
48	034-239	C23,70	CAPACITOR, MICA, 130 PF, 500V, 1%	
49	034-297	C1,37	CAPACITOR, MICA, 180 PF, 500V, 1%	
50	034-225	C78	CAPACITOR, MICA, 220 PF, 500V, 1%	

C

ITEM NO.	AMPEX PART NO.	REFERENCE NUMBER	DESCRIPTION	JEDEC NO. OR MFR. PART NO.
51	034-919	C72	CAPACITOR, MICA, 270 PF, 500V, 1%	
52	034-253	C47,49	CAPACITOR, MICA, 330 PF, 500V, 1%	
53	056-290	C7,8,17,25,42,93	CAPACITOR, MICA, 430 PF, 500V, 1%	
54	034-243	C18,56	CAPACITOR, MICA, 3000 PF, 500V, 1%	
55	034-517	C3,13	CAPACITOR, MICA, 910 PF, 100V, 1%	
58	055-133	C5,15,19	CAPACITOR, MYLAR, 0.0022 MFD, 50V, 5%	
59	055-195	C80	CAPACITOR, MYLAR, 0.0068 MFD, 50V, 5%	
60	055-131	C46	CAPACITOR, MYLAR' 0.039 MFD, 50V, 5%	
63	037-367	C20,29,33,76	CAPACITOR, TANT, 2.2 MFD, 20V	
64	037-726	C73	CAPACITOR, TANT, 3.3 MFD, 15 V	
65	037-991	C10,44,57,65,82, 84,90,91,94	CAPACITOR, TANT, 22 MFD, 15V	
69	044-944	R137	RESISTOR, VAR, 5K	
70	044-945	R9,20,59,96,117	RESISTOR, VAR, 10K	
72	062-836	R34,68,145	RESISTOR, MF, 75 OHM, 1/8W, 1%	
74	066-790	R150	RESISTOR, MF, 158 OHM, 1/8W, 1%	
75	062-884	R123-125	RESISTOR, MF, 301 OHM, 1/8W, 1%	
76	062-894	R32,127	RESISTOR, MF, 402 OHM, 1/8W, 1%	
77	062-968	R122	RESISTOR, MF, 4.99K, 1/8W, 1%	
78	066-802	R18	RESISTOR, MF, 9.76K, 1/8W, 1%	
79	066-752	R149	RESISTOR, MF, 11.8K, 1/8W, 1%	
81	066-599	R28	RESISTOR, MF, 12.7K, 1/8W, 1%	
83	057-055	R26,86	RESISTOR, MF, 20 OHM, 1/4W, 2%	
84	057-056	R42,142	RESISTOR, MF, 22 OHM, 1/4W, 2%	
85	057-064	R7,22,33,37,38, 51,63,67,83,88, 89,90,93,139,140	RESISTOR, MF, 47 OHM, 1/4W, 2%	
86	057-065	R1,12,62	RESISTOR, MF, 51 OHM, 1/4W, 2%	
87	057-069	R36,39,121	RESISTOR, MF, 75 OHM, 1/4W, 2%	
88	057-072	R3,14,17,24, 108,112,136	RESISTOR, MF, 100 OHM, 1/4W, 2%	
89	057-074	R120	RESISTOR, MF, 120 OHM, 1/4W, 2%	
90	057-075	R144	RESISTOR, MF, 130 OHM, 1/4W, 2%	
91	057-076	R58,91	RESISTOR, MF, 150 OHM, 1/4W, 2%	
92	057-077	R143	RESISTOR, MF, 160 OHM, 1/4W, 2%	
93	057-078	R146	RESISTOR, MF, 180 OHM, 1/4W, 2%	
94	057-079	R84,113	RESISTOR, MF, 200 OHM, 1/4W, 2%	
95	057-083	R41,114,148	RESISTOR, MF, 300 OHM, 1/4W, 2%	
96	057-084	R74,105	RESISTOR, MF, 330 OHM, 1/4W, 2%	
97	057-085	R119	RESISTOR, MF, 360 OHM, 1/4W, 2%	
98	057-086	R153	RESISTOR, MF, 390 OHM, 1/4W, 2%	
99	057-090	R4,15	RESISTOR, MF, 560 OHM, 1/4W, 2%	
100	057-091	R72,76,95,151, 158	RESISTOR, MF, 620 OHM, 1/4W, 2%	
101	057-093	R47,162,165	RESISTOR, MF, 750 OHM, 1/4W, 2%	
				C

ASSEMBLY NO. 1374014 TITLE VIDEO INPUT PWA, BD NO. 17, PAL/SECAM

ITEM NO.	AMPEX PART NO.	REFERENCE NUMBER	DESCRIPTION	JEDEC NO. OR MFR. PART NO.
102	057-096	R5,6,23,29,43, 44,50,52,56,77, 78,82,87,101, 107,111,130, 134,138,147, 157,167	RESISTOR, MF, 1K, 1/4W, 2%	
103	057-097	R2,13	RESISTOR, MF, 1.1K, 1/4W, 2%	
104	057-098	R40,99,118	RESISTOR, MF, 1.2K, 1/4W, 2%	
105	057-100	R10,60,64	RESISTOR, MF, 1.5K, 1/4W, 2%	
106	057-102	R46,70,80,128	RESISTOR, MF, 1.8K, 1/4W, 2%	
107	057-103	R73,79,81,100, 106,109,110, 126,159	RESISTOR, MF, 2K, 1/4W, 2%	
108	057-104	R25,27,35,66, 85,104,129,133	RESISTOR, MF, 2.2K, 1/4W, 2%	
109	057-105	R30,75,102	RESISTOR, MF, 2.4K, 1/4W, 2%	
110	057-106	R45	RESISTOR, MF, 2.7K, 1/4W, 2%	
111	057-107	R49	RESISTOR, MF, 3K, 1/4W, 2%	
112	057-108	R94,115,116,155	RESISTOR, MF, 3.3K, 1/4W, 2%	
113	057-109	R31,48,103	RESISTOR, MF, 3.6K, 1/4W, 2%	
114	057-110	R16,132,152, 156,166	RESISTOR, MF, 3.9K, 1/4W, 2%	
115	057-112	R65,98	RESISTOR, MF, 4.7K, 1/4W, 2%	
116	057-113	R61,131	RESISTOR, MF, 5.1K, 1/4 W, 2%	
117	057-114	R55,57,92	RESISTOR, MF, 5.6K, 1/4W, 2%	
118	057-115	R11,69	RESISTOR, MF, 6.2K, 1/4W, 2%	
119	057-116	R161	RESISTOR, MF, 6.8K, 1/4W, 2%	
120	057-117	R154	RESISTOR, MF, 7.5K, 1/4W, 2%	
121	057-120	R8,21,54,71,60	RESISTOR, MF, 10K, 1 /4W, 2%	
122	057-121	R141	RESISTOR, MF, 11K, 1/4W, 2%	
123	057-127	R19,53,97	RESISTOR, MF, 20K, 1/4W, 2%	
124	057-144	R135	RESISTOR, MF, 100K, 1/4W, 2%	
126	057-092	R163,164	RESISTOR, MF, 680 OHM, 1/4W, 2%	
130	143-981	J1-3,A,B,C J4-A,B,J5-A,B,C, J6-A,B, J7-A,B,C E43	JACK, CLOSED ENTRY	
131	602-012	J1-5,7	PLUG, SHORTING	
134	541-068	L1,2,8,9	INDUCTOR, VAR, 10 UH, 20%	
135	051-681	L11	INDUCTOR, VAR, 1 UH	
136	051-680	L12	INDUCTOR, VAR, 1.5 UH	
137	540-057	L6	INDUCTOR, FXD, 10 UH, 5%	
138	540-007	L5	INDUCTOR, FXD, 470 UH, 5%	
142	280-130		SPACER, XSTR, T0-18	
143	932-034		BEAD, FERRITE, 0.250 LG	
144	932-035		BEAD, FERRITE, 0.125 LG	
146	586-268	A1	INTEGRATED CIRCUIT	UA741C C

ASSEMBLY NO. 1374014 TITLE VIDEO INPUT PWA, BD NO. 17, PAL/SECAM

ITEM NO.	AMPEX PART NO.	REFERENCE NUMBER	DESCRIPTION	JEDEC NO. OR MFR. PART NO.
147	586-121	A21	INTEGRATED CIRCUIT	UA711A
148	586-124	A2,26	INTEGRATED CIRCUIT	UA710C
149	586-276	A33	INTEGRATED CIRCUIT	CA3046
150	586-447	A16	INTEGRATED CIRCUIT	CA3026
151	586-168	A5,9,15,17,23, 29,32	INTEGRATED CIRCUIT	SN74H00N
152	586-533	A3,4,7,8,10,12, 18,19,22,25,30, 35,36	INTEGRATED CIRCUIT	SN74121N
153	586-167	A11,24,28,31	INTEGRATED CIRCUIT	SN74H10N
154	586-700	A14,27,34	INTEGRATED CIRCUIT	SN74H74N
155	586-688	A6,13,20	INTEGRATED CIRCUIT	SN74H04N
158	302-395		STRAP, CABLE	
159	616-569		CABLE, COAX, 75 OHM	

C

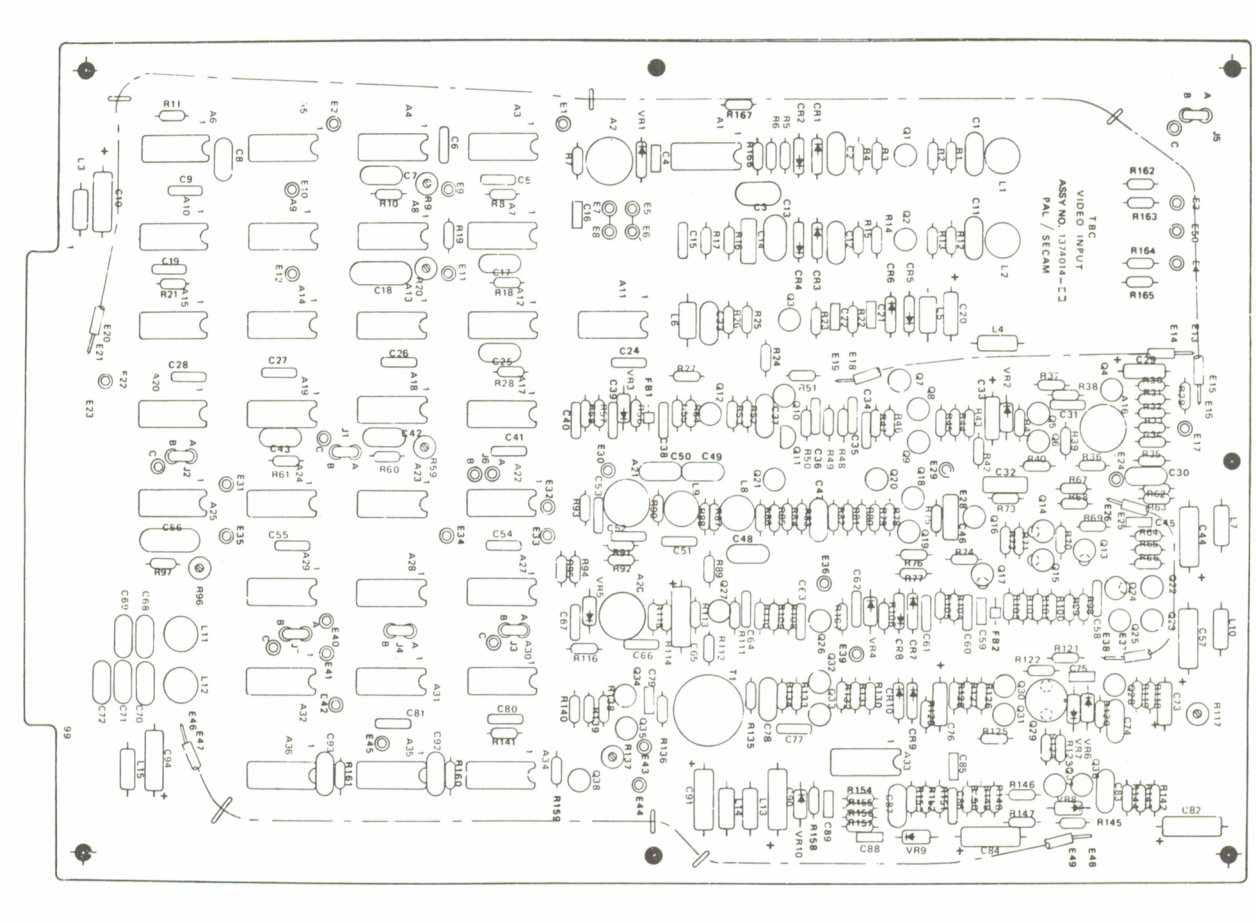

Assembly No. 1374014. Video Input PWA, Board No. 17, PAL/SECAM

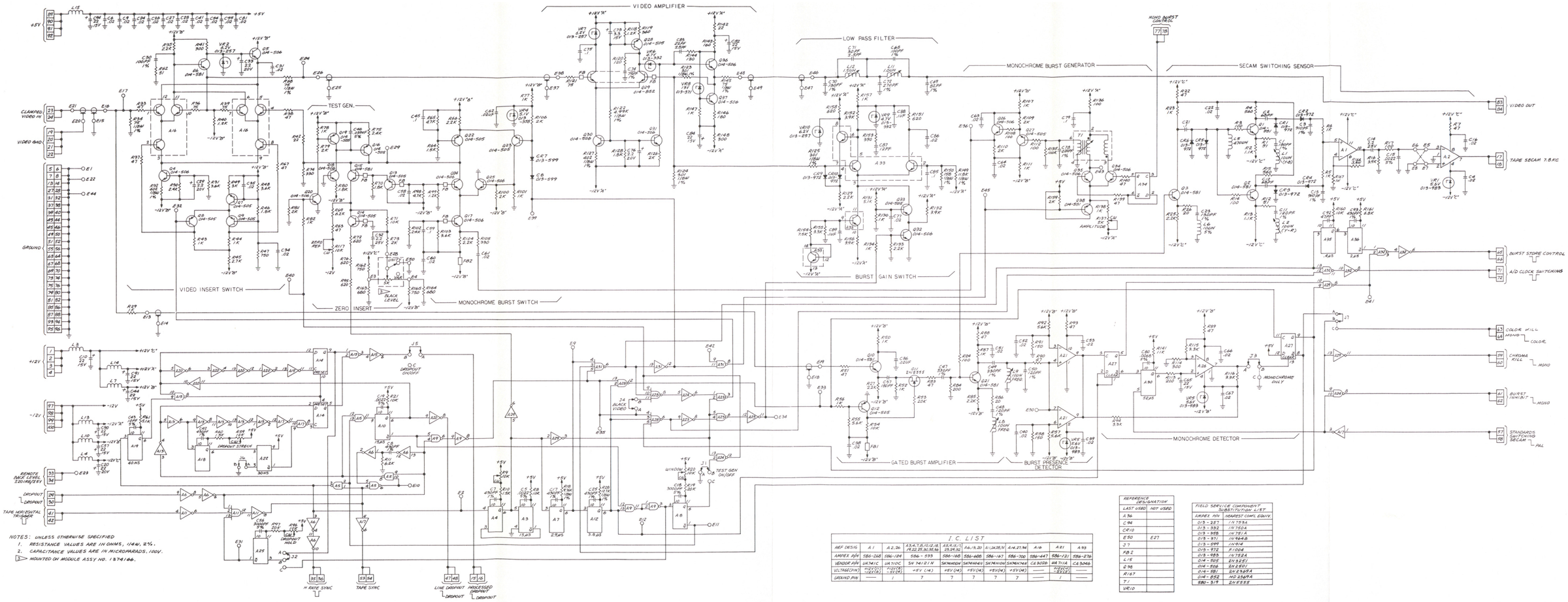

NOTES: UNLESS OTHERWISE SPECIFIED
1. RESISTANCE VALUES ARE IN OHMS, 1/4W, 2%.
2. CAPACITANCE VALUES ARE IN MICROFARADS, 100V.
3 => MOUNTED ON MODULE ASSY NO. 1374166.

I.C. LIST

REF. DESIG.	A1	A2,3A	A3,4,7,8,10,12,16, 19,22,25,30,36	A5,6,11, 23,29,32	A6,13,20	A14,27,34	A15	A21	A33
AMPEX P/N	586-268	586-124	586-133	586-168	586-408	586-167	586-330	586-447	586-121	586-276
VENDOR P/N	UA741C	UA710C	SN 74121 N	SN74H00N	SN74H04N	SN74H10N	SN74H74N	CA 3028	MA 711A	CA 3046
VOLTAGE(V+) VOLTAGE(V-)	+12V(T) -12V(R)	+12V(T) -5V(R)	+5V (A)	+5V (M)	+5V (M)	+5V (M)	+5V (M)	——	+12V(C) -5V(R)	——
GROUND PIN	——	1	7	7	7	7	7	——	1	——

REFERENCE DESIGNATION	
LAST USED	NOT USED
A36	
C94	
CR10	
E50	E27
J7	
FB2	
L15	
Q98	
R187	
T1	
VR10	

FIELD SERVICE COMPONENT SUBSTITUTION LIST	
AMPEX P/N	NEAREST COMP'L EQUIV.
0/3-257	IN 759A
0/3-332	IN 750A
0/3-958	IN 751A
0/3-97/	IN 914B
0/3-899	IN 914
0/3-972	F 1004
0/3-983	IN 752A
0/4-505	2N 3821
0/4-506	2N 3601
0/4-581	SX 2497A
0/4-852	MD 2369A
586-319	2N 5555

Schematic No. 1374016.
Video Input PWA, PAL/SECAM,
Board No. 17

A

ITEM NO.	AMPEX PART NO.	REFERENCE NUMBER	DESCRIPTION	JEDEC NO. OR MFR. PART NO.
	1374167-03		A/D CONVERTER A MODULE ASSEMBLY, MODULE NO. 18	
	1374167-05		A/D CONVERTER B MODULE ASSEMBLY, MODULE NO. 19	
3	1373272-01		SHIELD, PWB	
5	1373227-01		CONTACT, GND	
6	471-325		SCREW, MACH, FLAT HD, NO. 4-40 X 0.188 LG	
7	473-325		SCREW, MACH, PAN HD, XREC, NO. 4-40 X 0.325 LG	
8	496-004		NUT, KEP, NO. 4	
9	501-169		WASHER, PLAIN, NO. 4	
13	250-188		BUMPER, PAD, BLK RBR, ADH BACK	
14	1374254-01		A/D CONVERTER A PWA	
16	1373285-38		OVERLAY, A/D CONVERTER A	
17	1373285-39		OVERLAY, A/D CONVERTER B	
18	1373273-12		HANDLE, MDL	
19	1374257-03		A/D CONVERTER B PWA	
				E

SHEET 1 OF 1

ITEM NO.	AMPEX PART NO.	REFERENCE NUMBER	DESCRIPTION	JEDEC NO. OR MFR. PART NO.
	1374254-01		A/D CONVERTER A PWA, BD NO. 18	
3	1374256		SCHEMATIC	
5	1374106-01	T1	TRANSFORMER, TOROID	
6	1374106-02	T2	TRANSFORMER, TOROID	
7	1374157-01	R4,10,16,22,28, 34,41,197,203, 209,215,221, 227,233,239	RESISTOR, SELECTED, 24.9 OHM, 1/8W, 5%	
8	013-224	VR4	DIODE, ZENER	1N754A
9	013-332	VR1-3,5,6	DIODE, ZENER	1N750A
10	013-460	VR7	DIODE, ZENER	1N825A
11	013-962	CR4	DIODE	HP5082-2800
12	581-246	CR2	DIODE	HP5082-0113
13	581-247	CR1,3	DIODE, MTCHD QUAD	HP5082-2970
15	014-505	Q1,7,8,10,12,20, 22,25,28,30, 34-36,41	TRANSISTOR	2N3251
16	014-506	Q4,9,14,17-19,29, 31,38-40,44-46	TRANSISTOR	2N2501
17	014-581	Q2,5,11,13,15, 21,23,24,26,27, 37,42	TRANSISTOR	2N2369A
18	014-366		HEATSINK, XSTR, REF: Q9,32,37,39,43	
19	014-859	Q32,43	TRANSISTOR	2N4208
20	580-133	Q3,6	TRANSISTOR	2N4093
21	580-277	Q16,33	TRANSISTOR	2N4416
23	030-056	C28,35,41,45,46, 49-52,59,61,93	CAPACITOR, CER, 0.02 MFD, 100V, 20%	
24	030-057	C1-19,25,29-34, 37,39,42,47,48, 53-58,60,63-65, 67-90	CAPACITOR, CER, 0.01 MFD, 100V, 20%	
25	030-094	C26,43	CAPACITOR, CER, 1.0 MFD, 25V, 20%	
27	034-184	C40	CAPACITOR, MICA, 68 PF, 500V, 5%	
28	034-286	C20	CAPACITOR, MICA, 200 PF, 500V, 5%	
29	034-345	C91	CAPACITOR, MICA, 3 PF, 500V, ±0.5 PF	
30	034-941	C38	CAPACITOR, MICA, 51 PF, 500V, 5%	
31	034-961	C62	CAPACITOR, MICA, 120 PF, 500V, 5%	
32	034-969	C21	CAPACITOR, MICA, 43 PF, 500V, 5%	
34	035-734	C24,27	CAPACITOR, MYLAR, 0.01 MFD, 50V, 5%	
36	037-749	C22,23,92	CAPACITOR, TANT, 68 MFD, 15V, 10%	
38	037-991	C36,44,66	CAPACITOR, TANT, 22 MFD, 15V, 10%	
41	041-694	R155	RESISTOR, COMP, 10 OHM, 1/8W, 5%	
				A

ITEM NO.	AMPEX PART NO.	REFERENCE NUMBER	DESCRIPTION	JEDEC NO. OR MFR. PART NO.
42	049-602	R156	RESISTOR, COMP, 150 OHM, 1/8W, 5%	
44	057-056	R137	RESISTOR, MF 22 OHM, 1/4W, 2%	
45	057-063	R109,262	RESISTOR, MF, 43 OHM, 1/4W, 2%	
46	057-064	R106,107,110, 193,194	RESISTOR, MF, 47 OHM, 1/4W, 2%	
47	057-069	R114,143,144, 149,190,191	RESISTOR, MF, 75 OHM, 1/4W, 2%	
48	057-072	R93,115,131,132	RESISTOR, MF, 100 OHM, 1/4W, 2%	
49	057-073	R97,128,245	RESISTOR, MF, 110 OHM, 1/4W, 2%	
50	057-074	R51,56,60,64,68, 72,76,161,165, 169,173,177,181, 135,189,258,267	RESISTOR, MF, 120 OHM, 1/4W, 2%	
51	057-078	R247	RESISTOR, MF, 180 OHM, 1/4W, 2%	
52	057-079	R125-127	RESISTOR, MF, 200 OHM, 1/4W, 2%	
53	057-080	R49	RESISTOR, MF, 220 OHM, 1/4W, 2%	
54	057-081	R124,150,266	RESISTOR, MF, 240 OHM, 1/4W, 2%	
55	057-082	R112,151	RESISTOR, MF, 270 OHM, 1/4W, 2%	
56	057-083	R92,94,104,111, 145,153,154, 246,248	RESISTOR, MF, 300 OHM, 1/4W, 2%	
57	057-084	R120,147,152, 243	RESISTOR, MF, 330 OHM, 1/4W, 2%	
58	057-087	R91,103	RESISTOR, MF, 430 OHM, 1/4W, 2%	
59	057-088	R101,118,133, 136	RESISTOR, MF, 470 OHM, 1/4W, 2%	
60	057-089	R98,123,271	RESISTOR, MF, 510 OHM' 1/4W, 2%	
61	057-090	R255	RESISTOR, MF, 560 OHM, 1/4W, 2%	
62	057-091	R53,157,265	RESISTOR, MF, 620 OHM, 1/4W, 2%	
63	057-094	R117,139,140, 192,257	RESISTOR, MF, 820 OHM, 1/4W, 2%	
64	057-096	R82,86,90,138	RESISTOR, MF, 1K, 1/4W, 2%	
65	057-097	R3,9,15,21,27, 33,39,48,129, 130,198,204, 210,216,222, 228,234,240,261	RESISTOR, MF, 1.1K, 1/4W, 2%	
66	057-099	R113,119	RESISTOR, MF, 1.3K, 1/4W, 2%	
67	057-102	R6,12,18,24,30, 36,43,195,201, 207,213,219,225, 231,237	RESISTOR, MF, 1.8K, 1/4W, 2%	
68	057-103	R54,58,62,66,70, 74,78,159,163, 167,171,175,179, 183,187	RESISTOR, MF, 2K, 1/4W, 2%	
				A

ASSEMBLY NO. 1374254 TITLE A/D CONVERTER A PWA, BD NO. 18

ITEM NO.	AMPEX PART NO.	REFERENCE NUMBER	DESCRIPTION	JEDEC NO. OR MFR. PART NO.
69	057-104	R80,81,95,99, 259	RESISTOR, MF, 2.2K, 1/4W, 2%	
72	057-108	R1,2,7,8,13,14, 19,20,25,26,31, 32,37,38,96,116, 121,122,199,200, 205,206,211,212, 217,218,223,224, 229,230,235,236, 241,242,244,260	RESISTOR, MF, 3.3K, 1/4W, 2%	
73	057-109	R141,148,263	RESISTOR, MF, 3.6K, 1/4W, 2%	
74	057-110	R45,47,134	RESISTOR, MF, 3.9K, 1/4W, 2%	
75	057-111	R269	RESISTOR, MF, 4.3K, 1/4W, 2%	
76	057-115	R100	RESISTOR, MF, 6.2K, 1/4W, 2%	
77	057-117	R142,146,270	RESISTOR, MF, 7.5K, 1/4W, 2%	
78	057-118	R264	RESISTOR, MF' 8.2K, 1/4W, 2%	
79	057-121	R83,88	RESISTOR, MF, 11K, 1/4W, 2%	
80	057-137	R85,102,105	RESISTOR, MF, 51K, 1/4W, 2%	
81	057-144	R84	RESISTOR, MF, 100K, 1/4W, 2%	
83	044-941	R108	RESISTOR, VAR, 100 OHM, 1/2W, 20%	
84	044-943	R135	RESISTOR, VAR, 2K, 1/2W, 20%	
85	058-343	R50	RESISTOR, VAR, 10K, 3/4W, 10%	
86	058-563	R252	RESISTOR, VAR, 20 OHM, 1/2W, 10%	
87	058-573	R254,268	RESISTOR, VAR, 100 OHM, 1/2W, 10%	
88	058-611	R44,46	RESISTOR, VAR, 10K, 1/2W, 20%	
90	062-254	R256	RESISTOR, MF, 768 OHM, 1/4W, 1%	
91	062-844	R250	RESISTOR, MF, 90.9 OHM, 1/8W, 1%	
92	062-847	R249	RESISTOR, MF, 100 OHM, 1/8W, 1%	
93	062-867	R251	RESISTOR, MF, 165 OHM, 1/8W, 1%	
94	062-873	R253	RESISTOR, MF, 196 OHM, 1/8W, 1%	
95	062-884	R5,11,17,23,29, 35,42,52,55,57, 59,61,63,65,67, 69,71,73,75,77, 79,158,160,162, 164,166,168,170, 172,174,176,178, 180,182,184,186, 188,196,202,208, 214,220,226,232, 238	RESISTOR, MF, 301 OHM, 1/8W, 1%	
96	066-034	R87,89	RESISTOR, MF, 475K, 1/8W, 1%	
97	066-793	R40	RESISTOR, MF, 787 OHM, 1/8W, 1%	
102	143-981		JACK, PC, TIP, REF: J1-A,B,C	
103	226-035	L1,2,4,6	CORE, SIX APERTURE	
104	230-130		SPACER, XSTR, T0-18, REF: Q1-3,5-8,10-16,18-21,23,24,26-28, 30,32-36,38,40,42,46	
105	302-395		STRAP, CABLE	
				A

ASSEMBLY NO. 1374254 TITLE A/D CONVERTER A PWA, BD NO. 18

ITEM NO.	AMPEX PART NO.	REFERENCE NUMBER	DESCRIPTION	JEDEC NO. OR MFR. PART NO.
107	051-966	L5	INDUCTOR, FXD, 1.0 UH, 10%	
108	051-967	L3	INDUCTOR, FXD, 3.3 UH, 10%	
111	586-168	A30	INTEGRATED CIRCUIT	SN74H00N
112	586-268	A10,11,41-43	INTEGRATED CIRCUIT	UA741C
113	586-447	A1-7,32-39	INTEGRATED CIRCUIT	CA3026
114	586-473	A12,21	INTEGRATED CIRCUIT	MC1210L
115	586-477	A13-16,22-25	INTEGRATED CIRCUIT	MC1216L
116	586-485	A17,18,26,27	INTEGRATED CIRCUIT	MC1230L
117	586-489	A19,20,28,29	INTEGRATED CIRCUIT	MC1204L
118	586-533	A8,9	INTEGRATED CIRCUIT	SN74121N
119	586-688	A31,40	INTEGRATED CIRCUIT	SN74H04N
122	602-012		PLUG, SHORTING, REF: J1	
124	616-569		CABLE, COAX, 75 OHM	
127	932-034	FB1-4	BEAD, FERRITE, 0.250 LG	
128	932-035		BEAD, FERRITE, 0.125 LG	

A

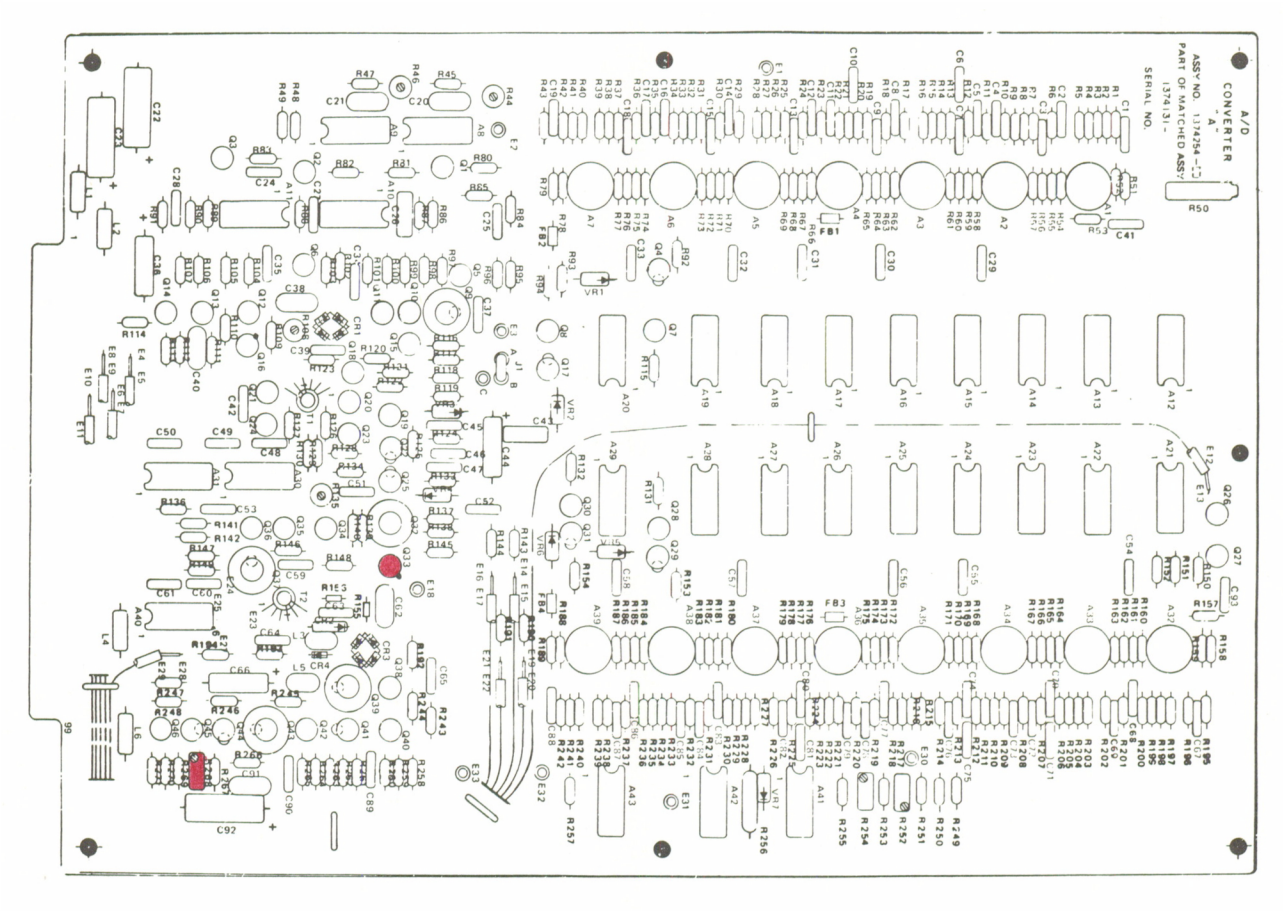

Assembly No. 1374254. A/D Converter A PWA, Board No. 18

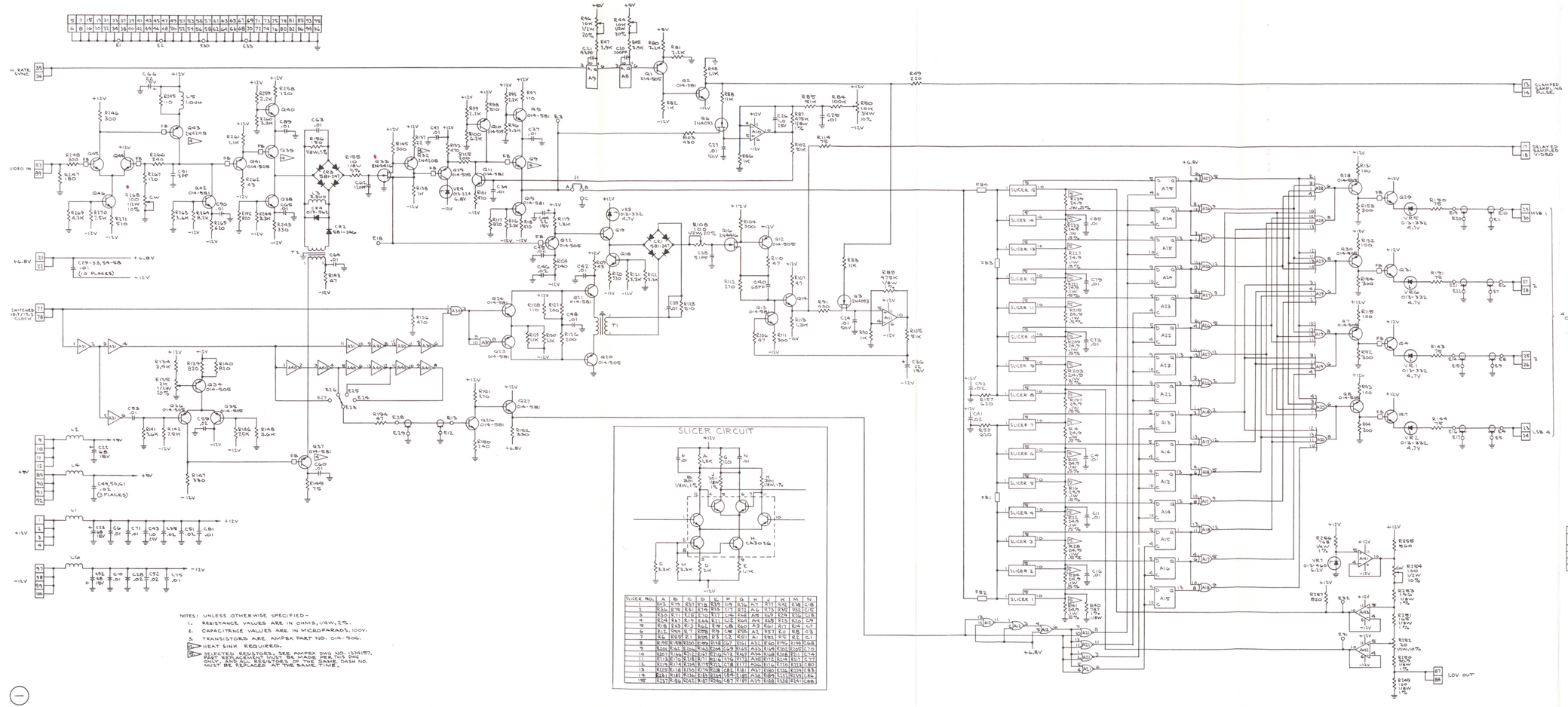

SLICER NO.	A	B	C	D	E	F	G	H	J	K	M	N
1	R53	R78	R51	R76	R55	C6	R74	A1	R57	E42	E38	C18
2	R56	R78	R61	R76	R55	C7	R72	A6	R73	E42	E32	C19
3	R50	R71	R58	R73	R53	C4	R68	A9	R69	E29	E26	C16
4	R54	R67	R19	R66	R51	C12	R64	A4	R65	R13	R20	C9
5	R16	R63	R13	R62	R18	C8	R60	A3	R61	R7	R14	C7
6	R12	R59	R7	R58	R9	C14	R56	A1	R57	R11	R8	C5
7	R6	R55	R1	R54	R3	C2	R52	A1	R53	R10	R2	C1
8	R198	R198	R200	R199	R48	C67	R161	A35	R160	R196	R199	C68
9	R204	R163	R206	R163	R206	C69	R165	A33	R164	R206	R207	C70
10	R207	R166	R210	R169	R212	C72	R167	A39	R168	R208	R211	C73
11	R213	R170	R216	R171	R214	C75	R173	A38	R172	R214	R217	C77
12	R219	R174	R224	R176	R222	C78	R177	A36	R176	R220	R223	C80
13	R225	R178	R230	R179	R228	C82	R181	A37	R180	R226	R229	C83
14	R231	R182	R236	R183	R234	C84	R185	A34	R184	R232	R235	C85
15	R237	R186	R242	R187	R240	C87	R189	A32	R188	R238	R241	C88

Schematic No. 1374256.
A/D Converter A PWA, Board No. 18

ITEM NO.	AMPEX PART NO.	REFERENCE NUMBER	DESCRIPTION	JEDEC NO. OR MFR. PART NO.
	1374257-03		A/D CONVERTER B PWA, BD NO. 19	
2	1374259		SCHEMATIC	
3	1374157-03	R8,14,20,26,32, 38,44,45,185,191, 197,203,209,215, 221,227	RESISTOR, SELECTED, 24.9 OHM, 0.1W, 0.5%	
4	1374157-04	R252,253	RESISTOR, SELECTED, 309 OHM, 0.1W, 0.1%	
5	1374157-05	R110,111,120, 121,130,131,137	RESISTOR, SELECTED	
6	1374157-11	R129,136	RESISTOR, SELECTED, 499 OHM, 1/8W, 1%	
7	013-166	VR2	DIODE, ZENER	1N746A
8	013-358	VR1	DIODE, ZENER	1N751A
9	013-460	VR3	DIODE, ZENER	1N825A
10	013-723	CR1-8	DIODE, SILICON	FD777
11	014-505	Q1,7-9,13,17,20, 24,29-32	TRANSISTOR	2N3251
12	014-506	Q3,4,6,10,16,23	TRANSISTOR	2N2501
13	014-581	Q12,14,15,18,19, 21,22,25,26-28	TRANSISTOR	2N2369A
14	014-755		HEATSINK, XSTR, REF: Q2	
15	014-852	Q11	TRANSISTOR	MD2369A
16	580-133	Q5	TRANSISTOR	2N4093
17	580-166	Q2	TRANSISTOR	2N5322
19	030-056	C22,34,35,41,45, 47,52,58-61, 87-89,92,93,95,96	CAPACITOR, CER, 0.02 MFD, 100V, 20%	
20	030-057	C2-21,24,26, 29-33,37,39,43, 51-53,62-85,90	CAPACITOR, CER, 0.01 MFD, 100V, 20%	
21	030-094	C48	CAPACITOR, CER, 1.0 MFD, 25V, 20%	
22	030-223	C25	CAPACITOR, CER, 2.2 MFD, 25V, 20%	
23	030-963	C86	CAPACITOR, CER, 0.1 MFD, 100V, 10%	
25	035-734	C23	CAPACITOR, MYLAR, 0.01 MFD, 50V, 5%	
27	037-164	C1	CAPACITOR, TANT, 1.0 MFD, 35V, 10%	
28	037-749	C27,28,91,94	CAPACITOR, TANT, 68 MFD, 15V, 10%	
29	037-991	C36,42,44,51	CAPACITOR, TANT, 22 MFD, 15V, 10%	
30	067-033	C38,46,49,50	CAPACITOR, TANT, 2.2 MFD, 20V, 20%	
31	038-275	C40	CAPACITOR, VAR, CER, 5.5-18 PF	
33	057-048	R94	RESISTOR, MF, 10 OHM, 1/4W, 2%	
34	057-063	R48	RESISTOR, MF, 43 OHM, 1/4W, 2%	
35	057-064	R1,59,62,103, 112,115,122,125, 132,135,138,141, 146,231,233,235, 237	RESISTOR, MF, 47 OHM, 1/4W, 2%	
				B

ASSEMBLY NO. 1374257 TITLE A/D CONVERTER B PWA, BD NO. 19

ITEM NO.	AMPEX PART NO.	REFERENCE NUMBER	DESCRIPTION	JEDEC NO. OR MFR. PART NO.
36	057-072	R232,234,236, 238	RESISTOR, MF, 100 OHM, 1/4W, 2%	
37	057-074	R63,68,72,76,80, 84,88,99,154, 158,162,166,170, 174,178,182	RESISTOR, MF, 120 OHM, 1/4W, 2%	
38	057-076	R56	RESISTOR, MF, 150 OHM, 1/4W, 2%	
39	057-081	R143,249	RESISTOR, MF, 240 OHM, 1/4W, 2%	
40	057-082	R144	RESISTOR, MF, 270 OHM, 1/4W, 2%	
41	057-083	R96	RESISTOR, MF, 300 OHM, 1/4W, 2%	
42	057-084	R98,145	RESISTOR, MF, 330 OHM, 1/4W, 2%	
43	057-085	R107	RESISTOR, MF, 360 OHM, 1/4W, 2%	
45	057-088	R114,124,134, 140	RESISTOR, MF, 470 OHM, 1/4W, 2%	
46	057-089	R113,123,133, 139,147-150,239, 242,243,246	RESISTOR, MF, 510 OHM, 1/4W, 2%	
47	057-091	R65,142	RESISTOR, MF, 620 OHM, 1/4W, 2%	
48	057-096	R2,50,104,117, 247	RESISTOR, MF, 1K, 1/4W, 2%	
49	057-097	R7,13,19,25,31, 37,43,186,192, 198,204,210,216, 222,228	RESISTOR, MF, 1.1K, 1/4W, 2%	
50	057-102	R10,16,22,28,34, 40,47,183,189, 195,201,207,213, 219,225	RESISTOR, MF, 1.8K, 1/4W, 2%	
51	057-103	R66,70,74,78,82, 86,90,152,156, 160,164,168,172, 176,180	RESISTOR, MF, 2K, 1/4W, 2%	
52	057-104	R128	RESISTOR, MF, 2.2K, 1/4W, 2%	
53	057-105	R95	RESISTOR, MF, 2.4K, 1/4W, 2%	
54	057-106	R254	RESISTOR, MF, 2.7K, 1/4W, 2%	
55	057-108	R5,6,11,12,17,18, 23,24,29,30,35, 36,41,42,55,92, 93,105,106,187, 188,193,194,199, 200,205,206,211, 212,217,218,223, 224,229,230	RESISTOR, MF, 3.3K, 1/4W, 2%	
56	057-113	R126	RESISTOR, MF, 5.1K, 1/4W, 2%	
57	057-114	R240,241,244, 245	RESISTOR, MF, 5.6K, 1/4W, 2%	
58	057-119	R54	RESISTOR, MF, 9.1K, 1/4W, 2%	
59	057-120	R51	RESISTOR, MF, 10K, 1/4W, 2%	
62	044-941	R100	RESISTOR, VAR, 100 OHM, 1/2W, 20%	
63	044-943	R127	RESISTOR, VAR, 2K, 1/2W, 20%	B

ASSEMBLY NO. 1374257 TITLE A/D CONVERTER B PWA, BD NO. 19

ITEM NO.	AMPEX PART NO.	REFERENCE NUMBER	DESCRIPTION	JEDEC NO. OR MFR. PART NO.
64	058-339	R248	RESISTOR, VAR, 500 OHM, 3/4W, 10%	
65	058-563	R109,119	RESISTOR, VAR, 20 OHM, 1/2W, 10%	
66	048-405	R250	RESISTOR, MF, 1.5K, 1/2W, 1%	
67	062-836	R52,53	RESISTOR, MF, 75 OHM, 1/8W, 1%	
68	062-847	R60,61	RESISTOR, MF, 100 OHM, 1/8W, 1%	
69	062-874	R57,58,101	RESISTOR, MF, 200 OHM, 1/8W, 1%	
70	062-877	R97	RESISTOR, MF, 221 OHM, 1/8W, 1%	
71	062-884	R9,15,21,27,33, 39,46,64,67,69, 71,73,75,77,79, 81,83,85,87,89, 91,151,153,155, 157,159,161,163, 165,167,169,171, 173,175,177,179, 181,184,190,196, 202,208,214,220 226	RESISTOR, MF, 301 OHM, 1/8W, 10%	
72	062-941	R251	RESISTOR, MF, 2.21K, 1/8W, 1%	
73	062-956	R4	RESISTOR, MF, 3.4K, 1/8W, 1%	
74	062-970	R102,116	RESISTOR, MF, 5.23K, 1/8W, 1%	
75	066-034	R49	RESISTOR, MF, 475K, 1/8W, 1%	
76	066-063	R3	RESISTOR, MF, 2.61K, 1/8W, 1%	
77	066-703	R108,118	RESISTOR, MF, 487 OHM, 1/8W, 1%	
78	066-792	R255	RESISTOR, MF, 37.4 OHM, 1/8W, 1%	
80	143-981		JACK, CLOSED ENTRY, REF: J1-A,B,C	
81	280-130		SPACER, XSTR, T0-18, REF: Q1,3-9,12,15,19,22,23,26-32	
82	280-998		SPACER XSTR, T0-5, REF: Q2	
83	302-395		STRAP, CABLE	
84	226-035	L1-3	CORE, SIX APERTURE	
86	586-268	A1,9,19-21,31, 32,48,49	INTEGRATED CIRCUIT	UA741C
87	586-447	A2-8,36-43	INTEGRATED CIRCUIT	CA3026
88	586-473	A10,22	INTEGRATED CIRCUIT	MC1210L
89	586-477	A11-14,23-26	INTEGRATED CIRCUIT	MC1216L
90	586-485	A15,16,27,28	INTEGRATED CIRCUIT	MC1230L
91	586-489	A17,18,29,30	INTEGRATED CIRCUIT	MC1204L
92	586-688	A46,50,51	INTEGRATED CIRCUIT	SN74H04N
93	586-700	A33-35,44,45,47	INTEGRATED CIRCUIT	SN74H74N
95	602-012	J1	PLUG, SHORTING	
98	616-569		CABLE COAX, 75 OHM	
100	932-034	FB1-4	BEAD, FERRITE, 0.25 LG	
101	932-035		BEAD, FERRITE, 0.125 LG	
				B

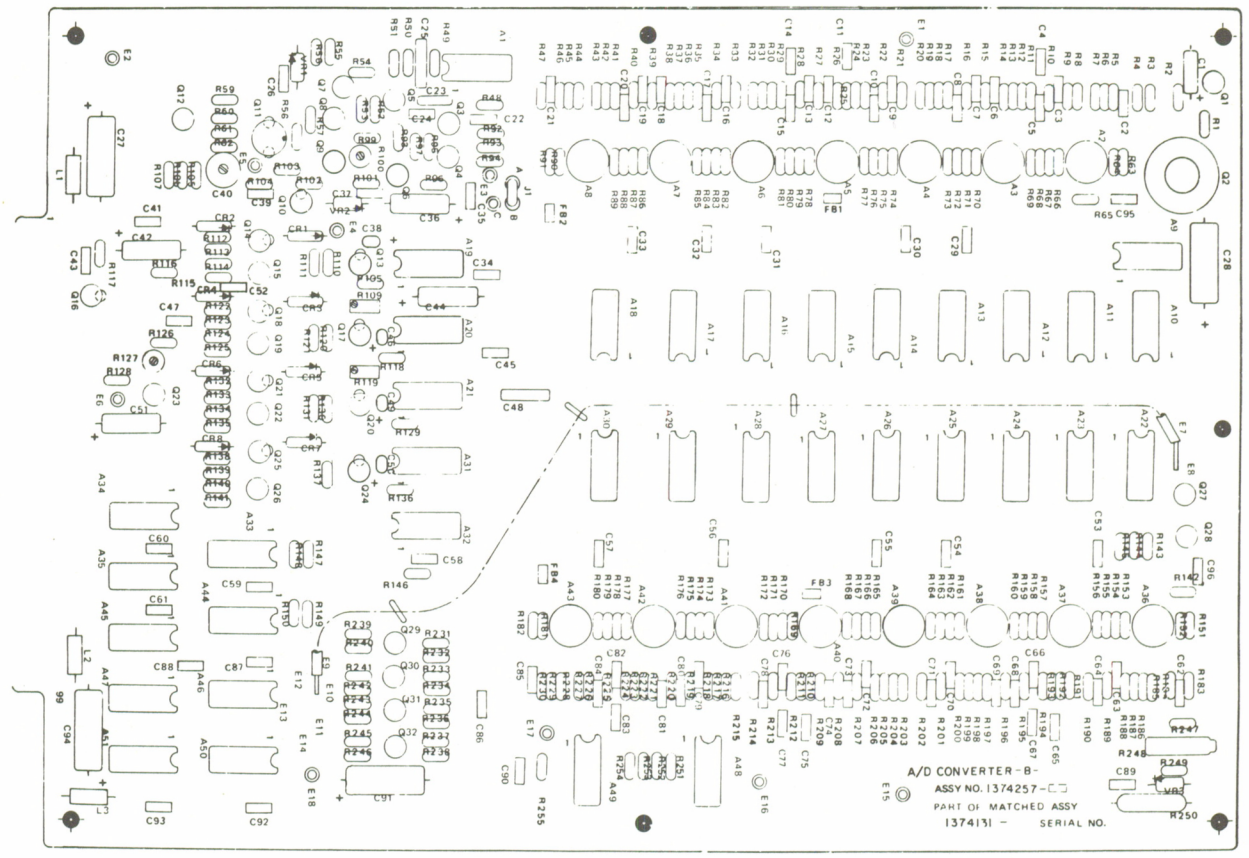

Assembly No. 1374257. A/D Converter B PWA, Board No. 19

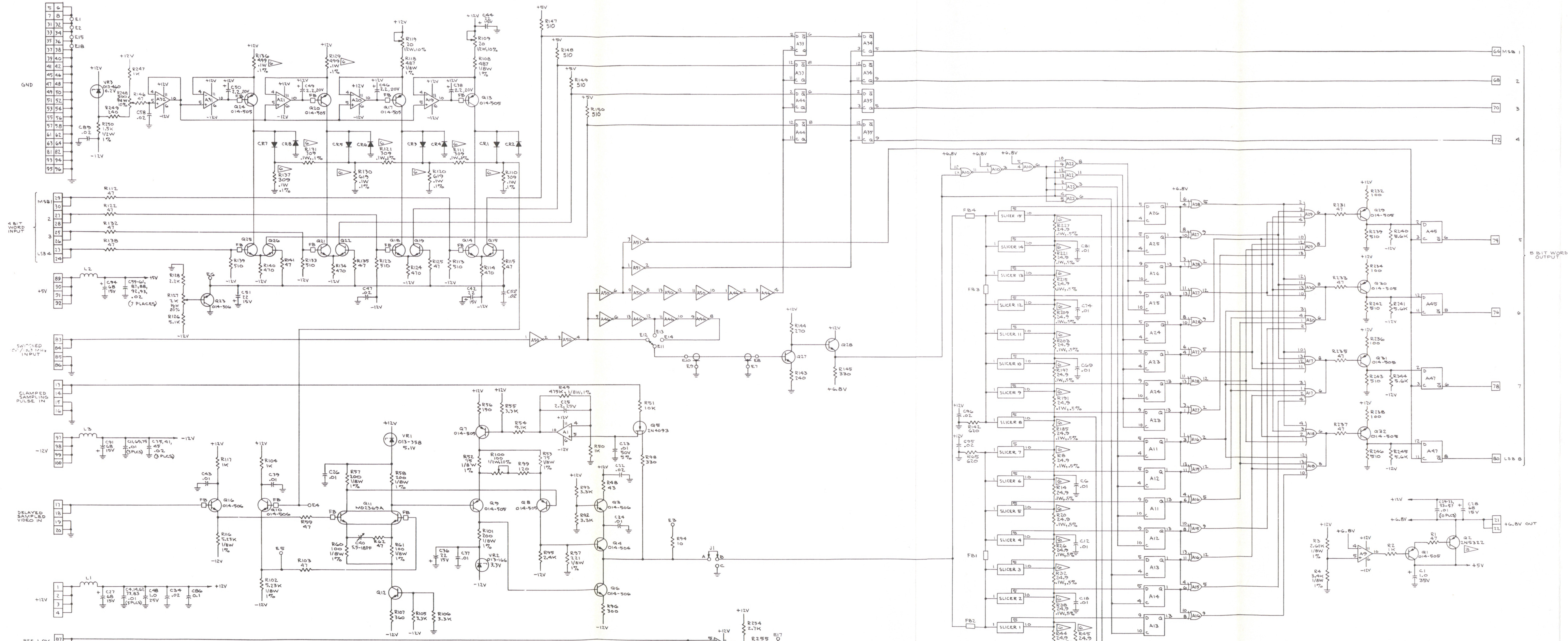

NOTES: UNLESS OTHERWISE SPECIFIED-

1 RESISTANCE VALUES ARE IN OHMS, 1/4W, 2%.
2 TRANSISTORS ARE AMPEX PART NO. 014-581.
3 HEATSINK REQUIRED.
4 CAPACITANCE VALUES ARE IN MICROFARADS, 100V.
5 DIODES ARE AMPEX PART NO. 013-723.

6 SELECTED RESISTORS, SEE AMPEX DWG. NO. 1374175. PART REPLACMENT MUST BE MADE PER THIS DWG ONLY, AND ALL RESISTORS OF THE SAME DASH NO. MUST BE REPLACED AT THE SAME TIME.

INTEGRATED CIRCUIT LIST

REFERENCE DESIGNATION	A33-35, 44,45,47	A17,18, 29,30	A10,22	A11-14, 23-26	A15,16, 27,28	A2-8, 36-43	A1,9,19-21, 31,32, 48,49	A46,50, 51	
AMPEX P/N	586-700	586-489	586-473	586-477	586-485	586-447	586-268	586-688	
VENDOR P/N	SN74H74N	MC1204L	MC1210L	MC1216L	MC1230L	CA3026	µA741C	SN74H04N	
VOLTAGE (PIN)	+5V (14)	+6.8V (7) +12V (14)	+6.8V (7) +12V (14)	+6.8V (7) +12V (14)	+6.8V (7) +12V (14)		-12V (6) +12V (11)	+5V (14)	
GROUND PINS	7							7	

SLICER CIRCUIT

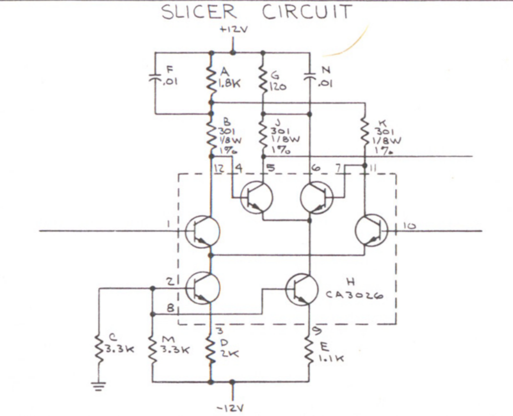

SLICER NO	A	B	C	D	E	F	G	H	J	K	N	M
1	R47	R91	R41	R90	R43	C21	R88	A8	R89	R46	C20	R42
2	R40	R87	R35	R86	R37	C19	R84	A7	R85	R39	C17	R36
3	R34	R83	R29	R82	R31	C16	R80	A6	R81	R33	C15	R30
4	R28	R79	R23	R78	R25	C13	R76	A5	R77	R27	C10	R24
5	R22	R75	R17	R74	R19	C9	R72	A4	R73	R21	C8	R18
6	R16	R71	R11	R70	R13	C7	R68	A3	R69	R15	C5	R12
7	R10	R67	R5	R66	R7	C3	R63	A2	R64	R9	C2	R6
8	R183	R151	R188	R152	R186	C62	R154	A36	R153	R184	C63	R187
9	R189	R155	R194	R156	R192	C64	R158	A37	R157	R190	C66	R193
10	R195	R159	R200	R160	R198	C68	R162	A38	R161	R196	C70	R199
11	R201	R163	R206	R164	R204	C71	R166	A39	R165	R202	C72	R205
12	R207	R167	R212	R168	R210	C73	R170	A40	R169	R208	C76	R211
13	R213	R171	R218	R172	R216	C78	R174	A41	R173	R214	C79	R217
14	R219	R175	R224	R176	R222	C80	R178	A42	R177	R220	C82	R223
15	R225	R179	R230	R180	R228	C84	R182	A43	R181	R226	C85	R229

FIELD SERVICE COMPONENT SUBSTITUTION LIST

AMPEX P/N	NEAREST COM'L EQUIV
013-166	1N746A
013-358	1N751A
013-460	1N825A
013-723	FD777
014-505	2N3251
014-506	2N2501
014-581	2N2369A
014-852	MD2369A
580-133	2N4093
580-166	2N5322

REFERENCE DESIGNATION

LAST USED	NOT USED
A51	
C96	
CR8	
E18	
FB4	
J1	
L3	
Q32	
R255	
VR3	

Schematic No. 1374259.
A/D Converter B PWA, Board No. 19

ITEM NO.	AMPEX PART NO.	REFERENCE NUMBER	DESCRIPTION	JEDEC NO. OR MFR. PART NO.
	1374287-01		CLOCK GENERATOR MODULE ASSEMBLY, PAL-M (NHA 1374001)	
1	1374034-01		CLOCK GENERATOR PWA	
2	1373285-40		OVERLAY	
3	1373272-01		SHIELD, PWB	
4	1373273-12		HANDLE, MODULE	
5	1373227-01		CONTACT, GND	
6	471-325		SCREW, MACH, FLAT HD, NO. 4-40 X 0.188 LG	
7	473-325		SCREW, MACH, PAN HD, XREC, NO. 4-40 X 0.325 LG	
8	496-004		NUT, KEP, NO. 4	
9	501-169		WASHER, PLAIN, NO. 4	
10	058-459	R250	RESISTOR, VAR, 5K, 1/2W, 10%	
11	6000001-20		KNOB, BLACK	
12	250-188		BUMPER, PAD, BLK RUBBER, ADH BACK	

SHEET 1 OF 1

ITEM NO.	AMPEX PART NO.	REFERENCE NUMBER	DESCRIPTION	JEDEC NO. OR MFR. PART NO.
	1374034-01		CLOCK GENERATOR PWA, BOARD NO. 20, PAL-M (NHA 1374287)	
3	1374036		SCHEMATIC	
6	1374108-01	L7,9,12-15,19-21, 23,28,32-38,44, 45,48,49,51,54,55	INDUCTOR, FILTER	
7	013-460	VR1	DIODE	1N825A
8	013-224	VR2,3,5,6	DIODE	1N754A
9	013-257	VR4,7	DIODE	1N753A
10	013-599	CR1-6	DIODE	1N914
12	014-505	Q7	TRANSISTOR	2N3251
13	014-506	Q1-3,5,6,8-28	TRANSISTOR	2N2501
14	580-167	Q4	TRANSISTOR	2N5320
17	030-057	C2,3,8-11,13,14, 19,24-31,34-41,43, 44,46-57,59-61,63, 67,68,71,73-75, 77-79,81,83,86, 88-92,95-98,100-103,109-112,114-117,119-125, 130-138,143	CAPACITOR, CER, 0.01 MFD, 100V, 20%	
18	030-936	C58,72	CAPACITOR, CER, 0.001 MFD, 500V, 10%	
19	030-963	C21,32,70	CAPACITOR, CER, 0.1 MFD, 100V, 10%	
21	034-163	C82,104	CAPACITOR, MICA, 470 PF, 500V, 5%	
22	034-177	C64,69,87,105, 108,113	CAPACITOR, MICA, 100 PF, 500V, 5%	
23	034-183	C18,20,142	CAPACITOR, MICA, 62 PF, 500V, 5%	
24	034-184	C22	CAPACITOR, MICA, 68 PF, 500V, 5%	
25	034-207	C6,65,93,128	CAPACITOR, MICA, 24 PF, 500V, 5%	
26	034-208	C76	CAPACITOR, MICA, 30 PF, 500V, 5%	
27	034-213	C66,94	CAPACITOR, MICA, 150 PF, 500V, 5%	
28	034-219	C1,12,84,99, 106,118	CAPACITOR, MICA, 120 PF, 500V, 1%	
29	034-239	C42	CAPACITOR, MICA, 130 PF, 500V, 1%	
30	034-286	C15,62,139	CAPACITOR, MICA, 200 PF, 500V, 5%	
31	034-938	C5,16,17,127, 140,141	CAPACITOR, MICA, 110 PF, 500V, 5%	
32	034-941	C80	CAPACITOR, MICA, 51 PF, 500V, 5%	
33	034-942	C4,7,126,129	CAPACITOR, MICA, 36 PF, 500V, 5%	
34	034-962	C85,107	CAPACITOR, MICA, 33 PF, 500V, 5%	
36	037-749	C23,33,144	CAPACITOR, TANT, 68 MFD, 15V, 10%	
37	037-991	C45	CAPACITOR, TANT, 22 MFD, 15V, 10%	
39	041-882	R11	RESISTOR, COMP, 36 OHM, 1W, 5%	
41	044-735	R47	RESISTOR, VAR, 100 OHM, 1W, 10%	

ITEM NO.	AMPEX PART NO.	REFERENCE NUMBER	DESCRIPTION	JEDEC NO. OR MFR. PART NO.
42	044-767	R107	RESISTOR, VAR, 5K, 1W, 10%	
43	044-803	R14,178	RESISTOR, VAR, 50 OHM, 1W, 10%	
44	044-891	R129,174	RESISTOR, VAR, 200 OHM, 1/2W, 20%	
45	044-944	R10,111	RESISTOR, VAR, 5K, 1/2W, 20%	
47	057-056	R58,100,104,109, 125,142,163,177	RESISTOR, MF, 22 OHM, 1/4W, 2%	
48	057-059	R195,199	RESISTOR, MF, 30 OHM, 1/4W, 2%	
49	057-060	R62,66	RESISTOR, MF, 33 OHM, 1/4W, 2%	
50	057-064	R21,33,55,74,75, 95,122,136,140, 148,153,172,188	RESISTOR, MF, 47 OHM, 1/4W, 2%	
51	057-069	R186	RESISTOR, MF, 75 OHM, 1/4W, 2%	
52	057-072	R4,5,8,12,15,16, 18-20,26,28,30, 31,36,38,46,49, 50,53,60,67,68, 71,73,149,150, 179,180,182,184, 185,187,191,196, 197,200,201,204, 206,208	RESISTOR, MF, 100 OHM, 1/4W, 2%	
53	057-079	R57	RESISTOR, MF, 200 OHM, 1/4W, 2%	
54	057-082	R27,48,102,141	RESISTOR, MF, 270 OHM, 1/4W, 2%	
55	057-083	R9,23,192	RESISTOR, MF, 300 OHM, 1/4W, 2%	
56	057-086	R76,77,94,96, 120,121,131,132, 152,154,167,168	RESISTOR, MF, 390 OHM, 1/4W, 2%	
57	057-087	R54	RESISTOR, MF, 430 OHM, 1/4W, 2%	
58	057-088	R3,6,51,63,147, 193	RESISTOR, MF, 470 OHM, 1/4W, 2%	
59	057-089	R86,108,123,143	RESISTOR, MF, 510 OHM, 1/4W, 2%	
60	057-093	R43,64	RESISTOR, MF, 750 OHM, 1/4W, 2%	
61	057-094	R59,97,101,105, 138,175	RESISTOR, MF, 820 OHM, 1/4W, 2%	
62	057-096	R56,99,103,124, 144	RESISTOR, MF, 1K, 1/4W, 2%	
63	057-097	R22,37,162	RESISTOR, MF, 1.1K, 1/4W, 2%	
64	057-098	R2,7,29,32,40,41, 146,151,194,198	RESISTOR, MF, 1.2K, 1/4W, 2%	
65	057-100	R44,45,61,65, 190,207	RESISTOR, MF, 1.5K, 1/4W, 2%	
66	057-103	R24,25,110,112	RESISTOR, MF, 2K, 1/4W, 2%	
67	057-107	R34,42,81,90,116, 137,158,173	RESISTOR, MF, 3K, 1/4W, 2%	

ASSEMBLY NO. 1374034 TITLE CLOCK GENERATOR PWA, BOARD NO. 20, PAL-M

ITEM NO.	AMPEX PART NO.	REFERENCE NUMBER	DESCRIPTION	JEDEC NO. OR MFR. PART NO.
68	057-108	R83,84,88,89, 113,114,133,134, 159,160,169,170	RESISTOR, MF, 3.3K, 1/4W, 2%	
69	057-112	R98	RESISTOR, MF, 4.7K, 1/4W, 2%	
70	057-124	R39	RESISTOR, MF, 15K, 1/4W, 2%	
71	057-126	R130	RESISTOR, MF, 18K, 1/4W, 2%	
72	057-131	R85	RESISTOR, MF, 30K, 1/4W, 2%	
73	057-073	R210	RESISTOR, MF, 110 OHM, 1/4W, 2%	
74	057-092	R13	RESISTOR, MF, 680 OHM, 1/4W, 2%	
75	058-611	R209	RESISTOR, VAR, 10K, 1/2W, 5%	
77	062-643	R78,93,119,126, 155,164	RESISTOR, MF, 2K, 1/8W, 1%	
78	062-834	R35,106,139, 176,189	RESISTOR, MF, 73.1 OHM, 1/8W, 1%	
79	062-884	R79,80,91,92, 117,118,127,128 156,157,165,166	RESISTOR, MF, 301 OHM, 1/8W, 1%	
80	062-885	R1,145	RESISTOR, MF, 309 OHM, 1/8W, 1%	
81	062-904	R82,87,115,135, 161,171	RESISTOR, MF, 511 OHM, 1/8W, 1%	
82	062-939	R70,72,203,205	RESISTOR, MF, 2050 OHM, 1/8W, 1%	
83	062-948	R52,69,183,202	RESISTOR, MF, 2550 OHM, 1/8W, 1%	
85	066-171	R17,181	RESISTOR, MF, 340 OHM, 1/8W, 1%	
87	143-981	J1-ABC,J2-ABC, J3-AB,J4-AB, J5-ABC,J6-ABC	JACK, PC	
89	226-035	L10,17,60	CORE, SIX APERTURE	
91	280-130	Q1,2,5-7,11,14-16,24-28	SPACER, XSTR, T0-18	
93	280-998	Q4	SPACER, XSTR, T0-5	
95	302-395		STRAP, CABLE	
97	051-166	L16,18,30,41,43	INDUCTOR, VAR, 15 UH, 20%	
98	051-681	L29,40	INDUCTOR,VAR, 1.0 UH, 20%	
99	541-068	L22	INDUCTOR, VAR, 10 UH, 20%	
100	541-070	L5,59	INDUCTOR, VAR, 22 UH, 20%	
101	541-072	L1,2,4,52,53,58	INDUCTOR, VAR, 68 UH, 20%	
102	541-073	L3,57	INDUCTOR, VAR, 6.8 UH, 20%	
103	541-079	L25,42	INDUCTOR, VAR, 3.3 UH, 20%	
104	541-080	L24,27,31,39, 46,47	INDUCTOR, VAR, 2.2 UH, 20%	
105	540-007	L6,8,11,26,50,56	INDUCTOR, FXD, 470 UH, 20%	
107	586-124	A26	INTEGRATED CIRCUIT	UA710
108	586-168	A24,25	INTEGRATED CIRCUIT	SN74H00N
109	586-255	A6,7,22,23	INTEGRATED CIRCUIT	CA3019
110	586-268	A3	INTEGRATED CIRCUIT	UA741

ASSEMBLY NO. 1374034 TITLE CLOCK GENERATOR PWA, BOARD NO. 20, PAL-M

ITEM NO.	AMPEX PART NO.	REFERENCE NUMBER	DESCRIPTION	JEDEC NO. OR MFR. PART NO.
111	586-447	A9,10,14,15,19,20	INTEGRATED CIRCUIT	CA3026
112	586-533	A1,2,11,13	INTEGRATED CIRCUIT	SN74121N
113	586-688	A4,8,12,16,17, 18,21	INTEGRATED CIRCUIT	SN74H04N
114	586-700	A5	INTEGRATED CIRCUIT	SN74H74N
116	602-012	J1,2,5,6	PLUG, SHORTING	
119	932-035		BEAD, FERRITE, 0.125 LG, REF: Q3,8-10,12,13,17-23	

SHEET 4 OF 4

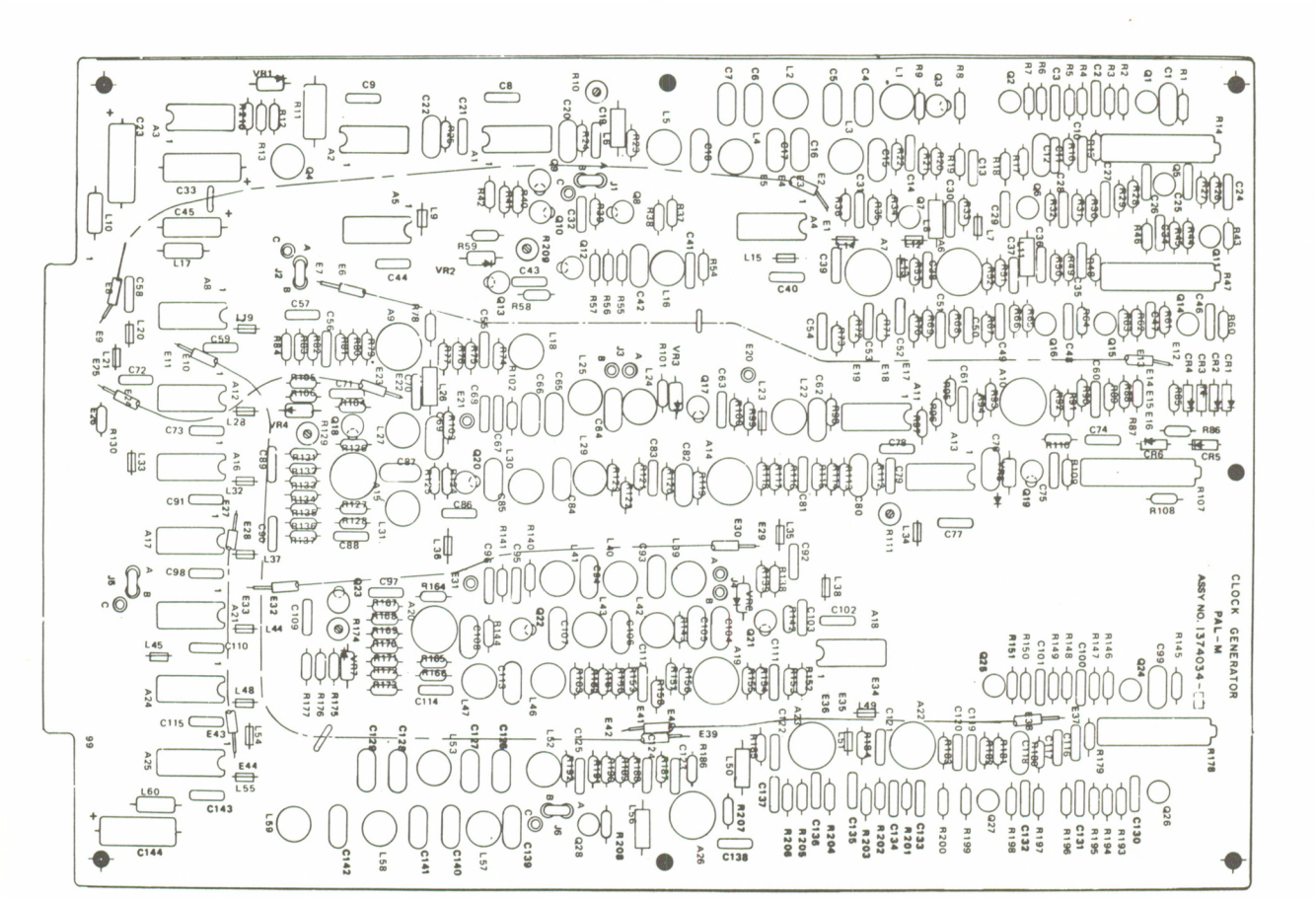

Assembly No. 1374034. Clock Generator PWA, Board No. 20, PAL-M

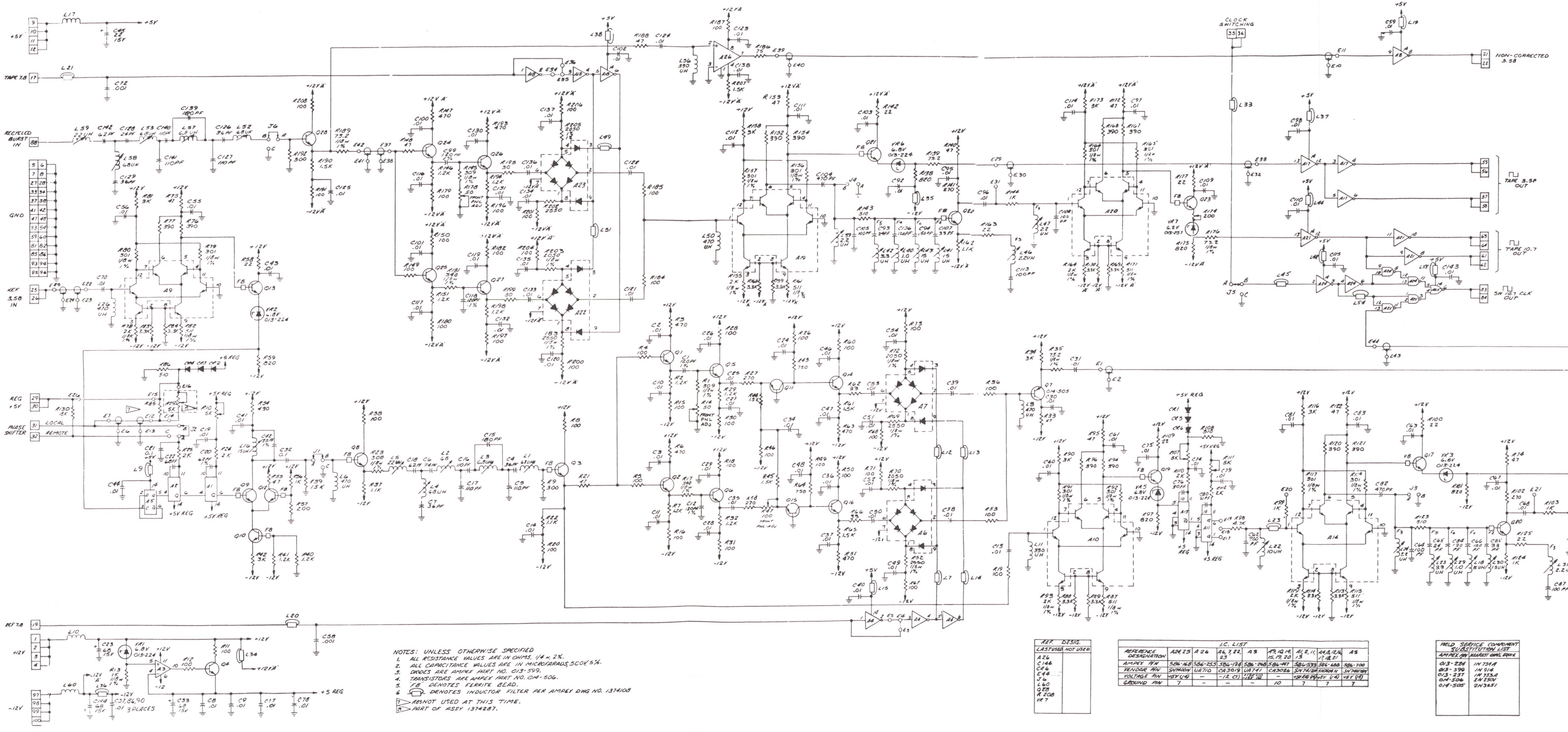

NOTES: UNLESS OTHERWISE SPECIFIED
1. ALL RESISTANCE VALUES ARE IN OHMS, 1/4 w, 2%.
2. ALL CAPACITANCE VALUES ARE IN MICROFARADS, 500V, 5%.
3. DIODES ARE AMPEX PART NO. 013-599.
4. TRANSISTORS ARE AMPEX PART NO. 014-506.
5. "FB" DENOTES FERRITE BEAD.
6. (inductor filter symbol) DENOTES INDUCTOR FILTER PER AMPEX DWG NO. 1374108
7. R85 NOT USED AT THIS TIME.
8. PART OF ASSY 1374287.

REF. DESIG.	
LAST USED	NOT USED
A26	
C144	
CR6	
E44	
J6	
L60	
Q28	
R208	
VR7	

I.C. LIST

REFERENCE DESIGNATION	A24, 25	A26	A6, 7, 22, 23	A3	A9, 10, 14, 15, 19, 20	A1, 2, 11, 13	A4, 8, 12, 16, 17, 18, 21	A5
AMPEX P/N	586-168	586-255	586-124	586-268	586-147	586-533	586-688	586-700
VENDOR P/N	SN7400N	UA710	CA3019	UA741	CA3026	SN74121N	SN7404N	SN74N74N
VOLTAGE PIN	+5V (14)	—	-12 (7)	+12V (7) -12V (4)	—	+5V REG (14)	+5V (14)	+5V (14)
GROUND PIN	7	—	—	—	10	7	7	7

FIELD SERVICE COMPONENT SUBSTITUTION LIST	
AMPEX P/N	NEAREST COM'L EQUIV.
013-224	1N751A
013-599	1N914
013-257	1N753A
014-506	2N2501
014-505	2N3251

Schematic No. 1374036.
Clock Generator PWA, PAL-M,
Board No. 20

AMPEX 1809178-02

ITEM NO.	AMPEX PART NO.	REFERENCE NUMBER	DESCRIPTION	JEDEC NO. OR MFR. PART NO.
	1374168-03		CLOCK GENERATOR MODULE ASSEMBLY, NTSC	
2	1373285-20		OVERLAY	
3	1373272-01		SHIELD, PWB	
4	1373273-13		HANDLE, MODULE	
5	1373227-01		CONTACT, GND	
6	471-325		SCREW, MACH, FLAT HD, NO. 4-40 X 0.188 LG	
7	473-325		SCREW, MACH, PAN HD, XREC, NO. 4-40 X 0.325 LG	
8	496-004		NUT, KEP, NO. 4	
9	501-169		WASHER, PLAIN, NO. 4	
10	058-459		RESISTOR, VAR, 5K	
11	6000001-20		KNOB	
14	250-188		BUMPER, PAD, BLK RBR, ADHESIVE BACK	
15	1374026-03		CLOCK GENERATOR PWA	
				E

SHEET 1 OF 1

ITEM NO.	AMPEX PART NO.	REFERENCE NUMBER	DESCRIPTION	JEDEC NO. OR MFR. PART NO.
	1374026-03		CLOCK GENERATOR PWA, BD NO. 20, NTSC	
3	1374028		SCHEMATIC	
4	013-224	VR1,3,4,7	DIODE, ZENER	1N754A
5	013-257	VR5,6	DIODE, ZENER	1N753A
6	932-034	L20-23	INDUCTOR, FILTER	
8	013-257	VR2	DIODE, ZENER	1N753A
9	013-599	CR1-6	DIODE	1N914
11	030-057	C1,2,5,8,9,11, 15-17,23,24,26, 27,35,36,38-41, 44,45,53-58,67, 69,70,74,81	CAPACITOR, CER, 0.01 UF, 100V, 20%	
13	030-963	C4,19,20	CAPACITOR, CER, 0.1 UF, 100V, 10%	
14	030-966	C6,47,61	CAPACITOR, CER, 0.01 UF, 100V, 10%	
15	037-367	C22	CAPACITOR, TANT, 2.2 UF, 20V, 10%	
16	034-177	C42,46,52,59, 60,66	CAPACITOR, MICA, 100 PF, 500V, 5%	
18	034-286	C12	CAPACITOR, MICA, 200 PF, 500V, 5%	
19	034-207	C29,51,65,78	CAPACITOR, MICA, 24 PF, 500V, 5%	
20	034-213	C49,63	CAPACITOR, MICA, 150 PF, 500V, 5%	
21	034-347	C32,71	CAPACITOR, MICA, 180 PF, 500V, 5%	
22	034-208	C7	CAPACITOR, MICA, 30 PF, 500V, 5%	
23	034-938	C30,31,33,72,76, 77	CAPACITOR, MICA, 110 PF, 500V, 5%	
24	034-942	C21,34,75,79	CAPACITOR, MICA, 36 PF, 500V, 5%	
25	034-961	C50,64	CAPACITOR, MICA, 120 PF, 500V, 5%	
26	034-962	C48,62	CAPACITOR, MICA, 33 PF, 500V, 5%	
27	034-941	C10	CAPACITOR, MICA, 51 PF, 500V, 5%	
28	056-163	C43,68	CAPACITOR, MICA, 470 PF, 500V, 5%	
29	037-991	C25	CAPACITOR, TANT, 22 UF, 15V	
30	037-749	C13,14,80	CAPACITOR, TANT, 68 UF, 15V	
31	034-239	C18	CAPACITOR, MICA, 130 PF, 500V, 1%	
32	034-184	C3	CAPACITOR, MICA, 68 PF, 500V, 5%	
33	226-035	L4,11,34	INDUCTOR, FXD	
34	034-183	C28,37,73	CAPACITOR, MICA, 62 PF, 500V, 5%	
35	044-944	R7,50	RESISTOR, VAR, 5K	
36	044-767	R12	RESISTOR, VAR,5K	
37	044-891	R106,107	RESISTOR, VAR, 200 OHM	
38	062-624	R10	RESISTOR, MF, 1K, 1/8W, 1%	
39	062-904	R25,45,56,76,92	RESISTOR, MF, 511 OHM, 1/8W, 1%	
40	062-643	R15,46,63,77,99	RESISTOR, MF, 2K, 1/8W, 1%	
42	057-094	R3,41,66,84,103	RESISTOR, MF, 820 OHM, 1/4W, 2%	
				M

ASSEMBLY NO. 1374026 TITLE CLOCK GENERATOR PWA, BD NO. 20, NTSC

ITEM NO.	AMPEX PART NO.	REFERENCE NUMBER	DESCRIPTION	JEDEC NO. OR MFR. PART NO.
43	057-056	R2,32,34,40,65, 68,83,86,102	RESISTOR, MF, 22 OHM, 1/4W, 2%	
44	057-064	R18,48,52,60, 67,73,85,96	RESISTOR, MF, 47 OHM, 1/4W, 2%	
46	057-072	R9,22	RESISTOR, MF, 100 OHM, 1/4W, 2%	
47	057-079	R54	RESISTOR, MF, 200 OHM, 1/4W, 2%	
48	057-082	R71,89	RESISTOR, MF, 270 OHM, 1/4W, 2%	
50	057-086	R16,17,47,49,59, 64,74,75,95,100	RESISTOR, MF, 390 OHM, 1/4W, 2%	
51	057-087	R28	RESISTOR, MF, 430 OHM, 1/4W, 2%	
53	057-096	R39,53,70,88	RESISTOR, MF, 1K, 1/4W, 2%	
54	057-097	R20,35,69,87	RESISTOR, MF, 1.1K, 1/4W, 2%	
55	057-098	R29,31	RESISTOR, MF, 1.2K, 1/4W, 2%	
56	057-107	R24,30,42,55, 82,91	RESISTOR, MF, 3K, 1/4W, 2%	
57	057-069	R36	RESISTOR, MF, 75 OHM, 1/4W, 2%	
58	057-083	R1,21,33,101	RESISTOR, MF, 300 OHM, 1/4W, 2%	
59	057-108	R26,27,43,44,57, 58,78,79,93,94	RESISTOR, MF, 3.3K, 1/4W, 2%	
60	062-884	R13,14,37,38, 61,62,80,81,97, 98	RESISTOR, MF, 301 OHM, 1/8W, 1%	
61	057-103	R4-6,51	RESISTOR, MF, 2K, 1/4W, 2%	
62	057-089	R72,90,104,105	RESISTOR, MF, 510 OHM, 1/4W, 2%	
64	057-112	R8	RESISTOR, MF, 4.7K, 1/4W, 2%	
65	057-124	R19	RESISTOR, MF, 15K, 1/4W, 2%	
66	540-007	L6	INDUCTOR, 470 UH	
67	540-030	L1,2,30	INDUCTOR, 330 UH	
68	541-068	L3	INDUCTOR, VAR, 10 UH, 20%	
69	541-070	L12,33	INDUCTOR, VAR, 22 UH, 20%	
70	051-958	L7,8,10,36,37	INDUCTOR, VAR, 68 UH, 20%	
71	051-957	L9,32	INDUCTOR, VAR, 6.8 UH, 20%	
72	051-956	L16,28	INDUCTOR, VAR, 3.3 UH, 20%	
73	541-080	L13,17,18,24, 25,29	INDUCTOR, VAR, 2.2 UH, 20%	
74	051-681	L15,27	INDUCTOR, VAR, 1.0 UH, 20%	
75	051-955	L5,14,19,26,35	INDUCTOR, VAR, 15 UH, 20%	
76	586-124	A3	INTEGRATED CIRCUIT	UA710
77	586-700	A1	INTEGRATED CIRCUIT	SN74H74
78	586-447	A7,8,10,17,18	INTEGRATED CIRCUIT	CA3026
79	586-688	A11-15	INTEGRATED CIRCUIT	SN74H04N
80	586-533	A2,4,5,9	INTEGRATED CIRCUIT	SN74121N
81	586-268	A6	INTEGRATED CIRCUIT	UA741C
82	586-287	A16	INTEGRATED CIRCUIT	SN74H51N
83	143-981	J1-7,A,B,C	CONNECTOR, JACK, PC TIP	
85	602-012	J1,2,3,6,7	PLUG, SHORTING	
86	280-998		SPACER, TRANSISTOR, REF: Q2	
88	041-283	R11	RESISTOR, COMP, 47 OHM, 1/2W, 5%	M

ASSEMBLY NO. 1374026 TITLE CLOCK GENERATOR PWA, BD NO. 20, NTSC

ITEM NO.	AMPEX PART NO.	REFERENCE NUMBER	DESCRIPTION	JEDEC NO. OR MFR. PART NO.
89	014-247	Q2	TRANSISTOR	2N2219
90	932-034	FB1	BEAD, FERRITE, 0.250 LG	
91	932-035		BEAD, FERRITE, 0.125 LG, REF: Q1,3-13	
92	014-581	Q1,3-13	TRANSISTOR	2N2369A
98	541-071	L31	INDUCTOR, VAR, 47 UH, 20%	M

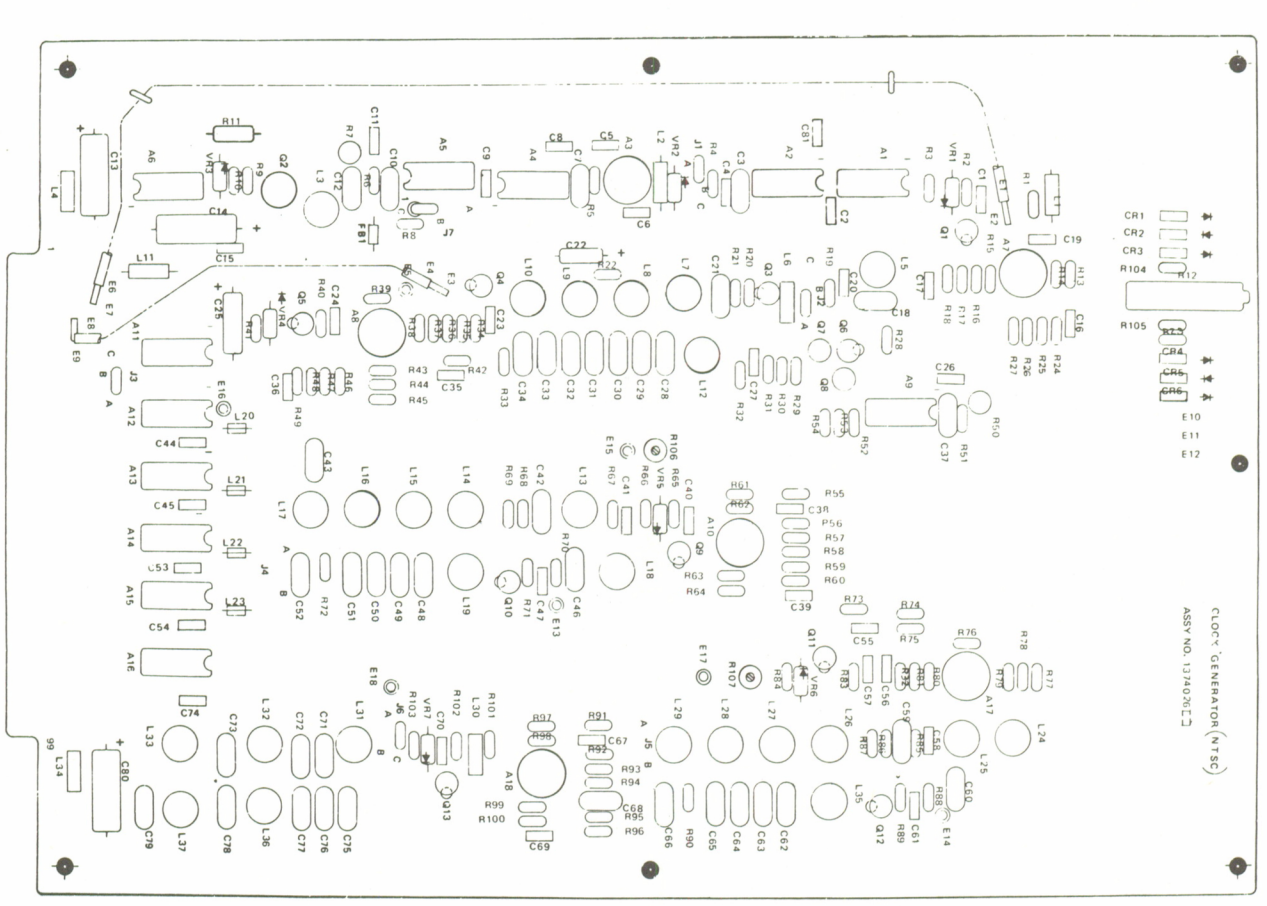

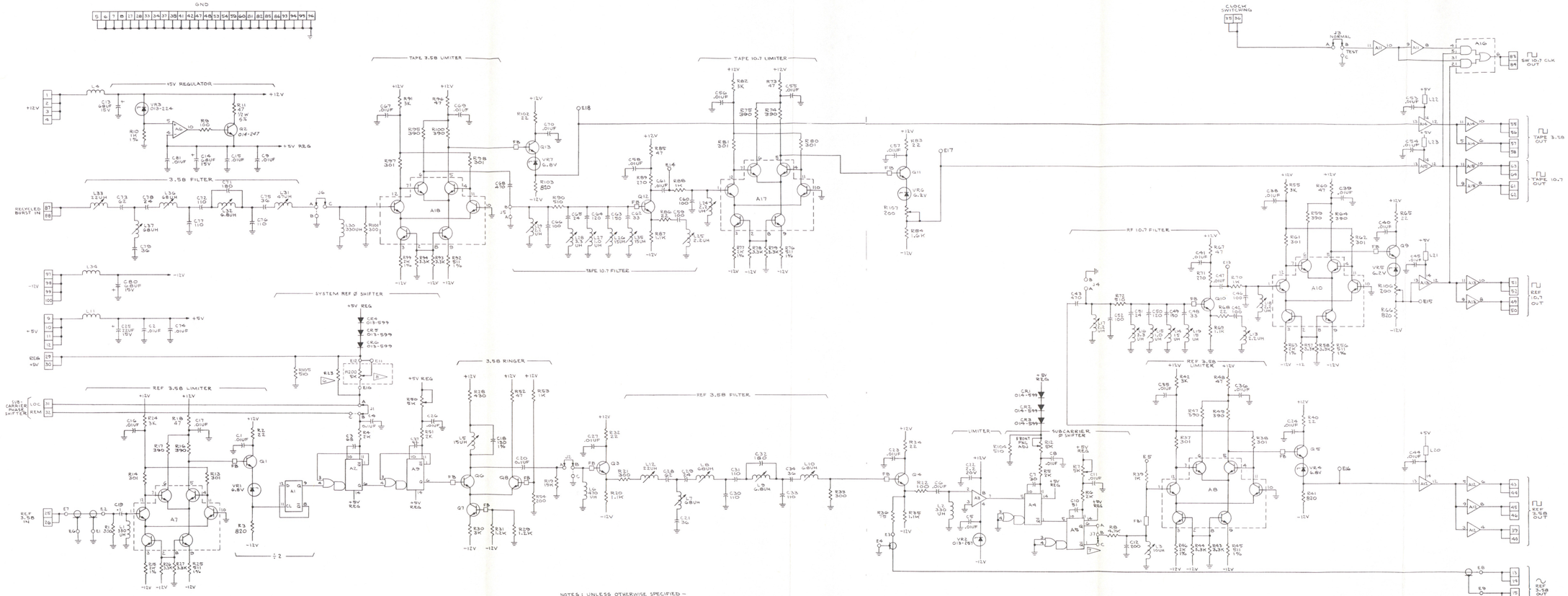

NOTES: UNLESS OTHERWISE SPECIFIED —

1. RESISTANCE VALUES ARE IN OHMS, 1/4W, 2%.
2. CAPACITANCE VALUES ARE IN MICROFARADS.
3. TRANSISTORS ARE PART NO. 014-581.
4. DIODES ARE PART NO. 013-224.
5. "FB" DENOTES FERRITE BEAD.

⟨2⟩ NOT USED AT THIS TIME.

⟨7⟩ JUMPER J7 POSITION DETERMINED DURING SYSTEM ALIGNMENT.

⟨8⟩ PART OF ASSY 1374168

REFERENCE DESIG	
LAST USED	NOT USED
A18	
CR1	
C90	
L38	
L39	
L37	
Q18	
R107	
VR7	

FIELD SERVICE COMPONENT SUBSTITUTION LIST	
AMPEX P/N	MARKET COMMERCIAL
013-599	1N914
013-224	1N753A
013-257	1N753A
014-581	2N2369A

INTEGRATED CIRCUIT LIST							
REFERENCE DESIGNATION	A6	A16	A7, A10 thru A15, A18	A4, A5, A9	A11-15	A1	A3
AMPEX P/N	586-268	986-187	986-447	586-995	586-488	586-700	586-114
VENDOR P/N	CA741C	SN74S74	CA3026	SN74121N	SN74H00N	SN74S74	SN7410
VOLTAGE (PIN)	+12V(7) -12V(4)	+5V(14)	—	+5V(14)	+5V(14)	+5V(14)	+5V(14) -15V(8)
GND PINS	—	7	10	7	7	7	1

B

AMPEX 1809178-02

Schematic No. 1374028.
Clock Generator PWA, NTSC, Board No. 20

11-191/192

ITEM NO.	AMPEX PART NO.	REFERENCE NUMBER	DESCRIPTION	JEDEC NO. OR MFR. PART NO.
	1374179-02		CLOCK GENERATOR MODULE ASSEMBLY, PAL/SECAM	
2	1373285-40		OVERLAY	
3	1373272-01		SHIELD, PWB	
4	1373273-13		HANDLE, MODULE	
5	1373227-01		CONTACT, GND	
6	471-325		SCREW, MACH, FLAT HD, NO. 4-40 X 0.188 LG	
7	473-325		SCREW, MACH, PAN HD, XREC, NO. 4-40 X 0.325 LG	
8	496-004		NUT, KEP, NO. 4	
9	501-169		WASHER, PLAIN, NO. 4	
10	058-459	R210	RESISTOR, VAR, 5K, 1/2W, 10%	
11	6000001-20		KNOB, BLK	
12	250-188		BUMPER, PAD, BLK RBR, ADHESIVE BACK	
14	1374030-02		CLOCK GENERATOR PWA	
				A

SHEET 1 OF 1

ITEM NO.	AMPEX PART NO.	REFERENCE NUMBER	DESCRIPTION	JEDEC NO. OR MFR. PART NO.
	1374030-02		CLOCK GENERATOR PWA, BD NO. 20, PAL/SECAM	
3	1374032		SCHEMATIC	
7	1374108-01	L7,9,13-16,18,19, 21,22,24-26,28,33, 36,37,39-43,49,50, 53-55,57,60	INDUCTOR, FILTER	
9	013-257	VR4,7	DIODE, ZENER	1N753A
10	013-224	VR1-3,5,6	DIODE, ZENER	1N754A
11	013-599	CR1-6	DIODE	1N914
13	014-505	Q7	TRANSISTOR	2N3251
15	034-222	C1,12,107,117	CAPACITOR, MICA, 100 PF, 500V, 1%	
16	030-963	C21,33,73	CAPACITOR, CER, 0.1 UF, 100V, 10%	
17	030-057	C2,3,8-11,13,14, 19,24-31,34,37-44, 46-48,50-61,63,64, 66,70,71,74-78,80, 81,83,85,89,90, 93-99,105,106, 108-111, 113-116, 118-124,129-138	CAPACITOR, DISC, CER, 0.01 UF, 500V, 20%	
21	030-936	C49,62	CAPACITOR, DISC, CER, 0.001 UF, 500V, 10%	
22	034-180	C18,142	CAPACITOR, MICA, 39 PF, 500V, 5%	
23	034-183	C22	CAPACITOR, MICA, 62 PF, 500V, 5%	
24	034-184	C5,16,17,67,72,88, 101,104,112,126, 140,141	CAPACITOR, MICA, 68 PF, 500V, 5%	
25	034-185	C86,102	CAPACITOR, MICA, 75 PF, 500V, 5%	
26	034-207	C4,7,125,128	CAPACITOR, MICA, 24 PF, 500V, 5%	
29	034-439	C15,65,139	CAPACITOR, MICA, 130 PF, 500V, 5%	
30	034-269	C79,87,103,144,145	CAPACITOR, MICA, 22 PF, 500V, 5%	
31	034-962	C20,82	CAPACITOR, MICA, 33 PF, 500V, 5%	
32	034-963	C6,68,91,127	CAPACITOR, MICA, 15 PF, 500V, 5%	
34	056-163	C84,100	CAPACITOR, MICA, 470 PF, 500V, 5%	
35	037-749	C23,35,143	CAPACITOR, TANT, 68 UF, 15V	
36	037-991	C36	CAPACITOR, TANT, 22 UF, 15V	
37	034-252	C45,69,92	CAPACITOR, MICA, 82 PF, 500V, 1%	
38	044-735	R48	RESISTOR, VAR, 100 OHM	
39	044-767	R108	RESISTOR, VAR, 5K	
40	044-803	R14,179	RESISTOR, VAR, 50 OHM	
41	044-944	R10,112	RESISTOR, VAR, 5K	
42	057-056	R59,104,110,126, 127,144,159,178	RESISTOR, MF, 22 OHM, 1/4W, 2%	
43	057-059	R197,201	RESISTOR, MF, 30 OHM, 1/4W, 2%	
44	057-060	R66,70	RESISTOR, MF, 33 OHM, 1/4W, 2%	
				E

ASSEMBLY NO. 1374030 TITLE CLOCK GENERATOR PWA, BD NO. 20, PAL/SECAM

ITEM NO.	AMPEX PART NO.	REFERENCE NUMBER	DESCRIPTION	JEDEC NO. OR MFR. PART NO.
45	057-064	R21,33,43,56,78, 79,99,123,138, 142,155,163,168, 190	RESISTOR, MF, 47 OHM, 1/4W, 2%	
46	057-069	R61,188,214	RESISTOR, MF, 75 OHM, 1/4W, 2%	
48	057-079	R58	RESISTOR, MF, 200 OHM, 1/4W, 2%	
49	057-080	R49	RESISTOR, MF, 220 OHM, 1/4W, 2%	
50	057-082	R27,106,143	RESISTOR, MF, 270 OHM, 1/4W, 2%	
52	057-087	R55	RESISTOR, MF, 430 OHM, 1/4W, 2%	
54	057-089	R90,109,124,145	RESISTOR, MF, 510 OHM, 1/4W, 2%	
55	057-093	R44,68	RESISTOR, MF, 750 OHM, 1/4W, 2%	
56	057-094	R60,101,105,131, 140,157	RESISTOR, MF, 820 OHM, 1/4W, 2%	
57	057-096	R57,103,107, 125,146	RESISTOR, MF, 1K, 1/4W, 2%	
58	057-097	R22,37,177	RESISTOR, MF, 1.1K, 1/4W, 2%	
59	057-098	R2,7,29,32,40, 41,161,166,196, 200	RESISTOR, MF, 1.2K, 1/4W, 2%	
60	057-100	R25,45,46,63,65, 69,111,187,192	RESISTOR, MF, 1.5K, 1/4W, 2%	
61	057-103	R113	RESISTOR, MF, 2K, 1/4W, 2%	
62	057-106	R24	RESISTOR, MF, 2.7K, 1/4W, 2%	
63	057-107	R34,42,85,94, 117,139,156,173	RESISTOR, MF, 3K, 1/4W, 2%	
64	057-108	R87,88,92,93, 114,115,135,136, 152,153,174,175	RESISTOR, MF, 3.3K, 1/4W, 2%	
66	057-112	R102	RESISTOR, MF, 4.7K, 1/4W, 2%	
67	057-114	R39	RESISTOR, MF, 5.6K, 1/4W, 2%	
68	057-126	R89,212	RESISTOR, MF, 18K, 1/4W, 2%	
69	062-624	R13	RESISTOR, MF, 1K, 1/8W, 1%	
70	062-643	R82,97,120,128, 147,170	RESISTOR, MF, 2K, 1/8W, 1%	
71	062-834	R35,132,141,158, 191	RESISTOR, MF, 73.2 OHM, 1/8W, 1%	
72	062-884	R83,84,95,96, 118,119,129,130, 148,149,171,172	RESISTOR, MF, 301 OHM, 1/8W, 1%	
73	062-885	R1,160	RESISTOR, MF, 309 OHM, 1/8W, 1%	
74	062-887	R17,182	RESISTOR, MF, 332 OHM, 1/8W, 1%	
75	062-891	R9,23,194	RESISTOR, MF, 374 OHM, 1/8W, 1%	
76	062-904	R86,91,116,137, 154,176	RESISTOR, MF, 511 OHM, 1/8W, 1%	
77	062-939	R74,76,205,207	RESISTOR, MF, 2050 OHM, 1/8W, 1%	
78	062-948	R53,73,184,204	RESISTOR, MF, 2550 OHM, 1/8W, 1%	
				E

ASSEMBLY NO. 1374030 TITLE CLOCK GENERATOR PWA, BD NO. 20, PAL/SECAM

ITEM NO.	AMPEX PART NO.	REFERENCE NUMBER	DESCRIPTION	JEDEC NO. OR MFR. PART NO.
79	044-891	R211,213	RESISTOR, VAR, 200 OHM	
80	014-247	Q4	TRANSISTOR	2N2219
81	014-506	Q1-3,5,6,8-28	TRANSISTOR	2N2501
83	051-166	L17,23,35,46,48	INDUCTOR, VAR, 15 UH, 20%	
84	051-681	L34,45	INDUCTOR, VAR, 1.0 UH, 20%	
85	541-068	L27	INDUCTOR, VAR, 10 UH, 20%	
86	541-070	L5,64	INDUCTOR, VAR, 22 UH, 20%	
87	541-072	L1,2,4,58,59,63	INDUCTOR, VAR, 68 UH, 20%	
88	541-073	L3,62	INDUCTOR, VAR, 6.8 UH, 20%	
89	541-079	L30,47	INDUCTOR, VAR, 3.3 UH, 20%	
90	541-080	L29,32,38,44,51, 52	INDUCTOR, VAR, 2.2 UH, 20%	
91	051-962	L6,8	INDUCTOR, FXD, 470 UH	
92	051-961	L10,12,31,56,61	INDUCTOR, FXD, 330 UH	
95	143-981	J1-A,B,C,J2-A,B,C J3-A,B,J4-A,B, J5-A,B,C,J6-A,B,C J7-A,B,C	CONNECTOR, JACK, PC, TIP	
96	280-130		SPACER, XSTR, T0-18	
97	226-035	L11,20,65	CORE, SIX APERTURE	
98	302-395		STRAP, CABLE	
100	586-124	A9,28	INTEGRATED CIRCUIT	UA710
101	586-255	A6,7,25,26	INTEGRATED CIRCUIT	CA3019
102	586-268	A3	INTEGRATED CIRCUIT	UA741
103	586-447	A11,12,16,17, 20,23	INTEGRATED CIRCUIT	CA3026
104	586-533	A1,2,13,15	INTEGRATED CIRCUIT	SN74121N
105	586-688	A4,10,14,18,19, 21,22	INTEGRATED CIRCUIT	SN74H04N
106	586-700	A5	INTEGRATED CIRCUIT	SN74H74N
107	586-168	A8,24,27	INTEGRATED CIRCUIT	SN74H00N
110	602-012		PLUG, SHORTING, REF: J1-7	
111	616-569		CABLE, COAX, 75 OHM	
114	932-035		BEAD, FERRITE, 0.125 LG, REF: Q3,8-10,12,13,17-23	
118	057-086	R80,81,98,100, 121,122,134,151, 167,169	RESISTOR, MF, 340 OHM, 1/4W, 2%	
119	057-088	R3,6,52,67,133, 150,162,195	RESISTOR, MF, 470 OHM, 1/4W, 2%	
120	041-283	R11	RESISTOR, COMP, 47 OHM, 1/2W, 5%	
121	057-072	R4,5,8,12,15,16, 18-20,26,28,30, 31,34-38,47,50, 51,54,62,64,71, 72,75,77,164, 165,180,181,183, 185,186,189,193, 198,199,202,203, 206,208,209	RESISTOR, MF, 100 OHM, 1/4W, 2%	E

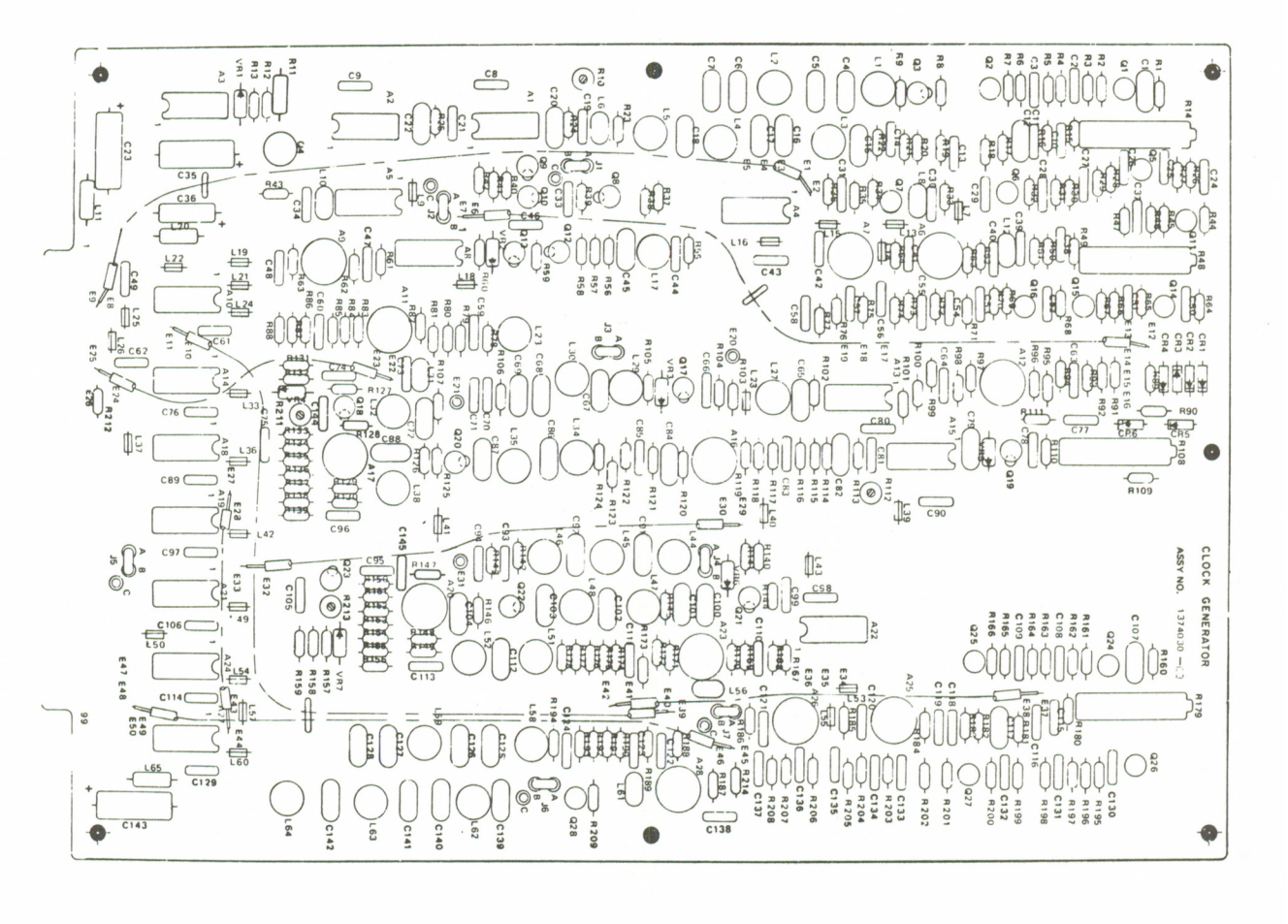

Assembly No. 1374030. Clock Generator PWA, Board No. 20, PAL/SECAM

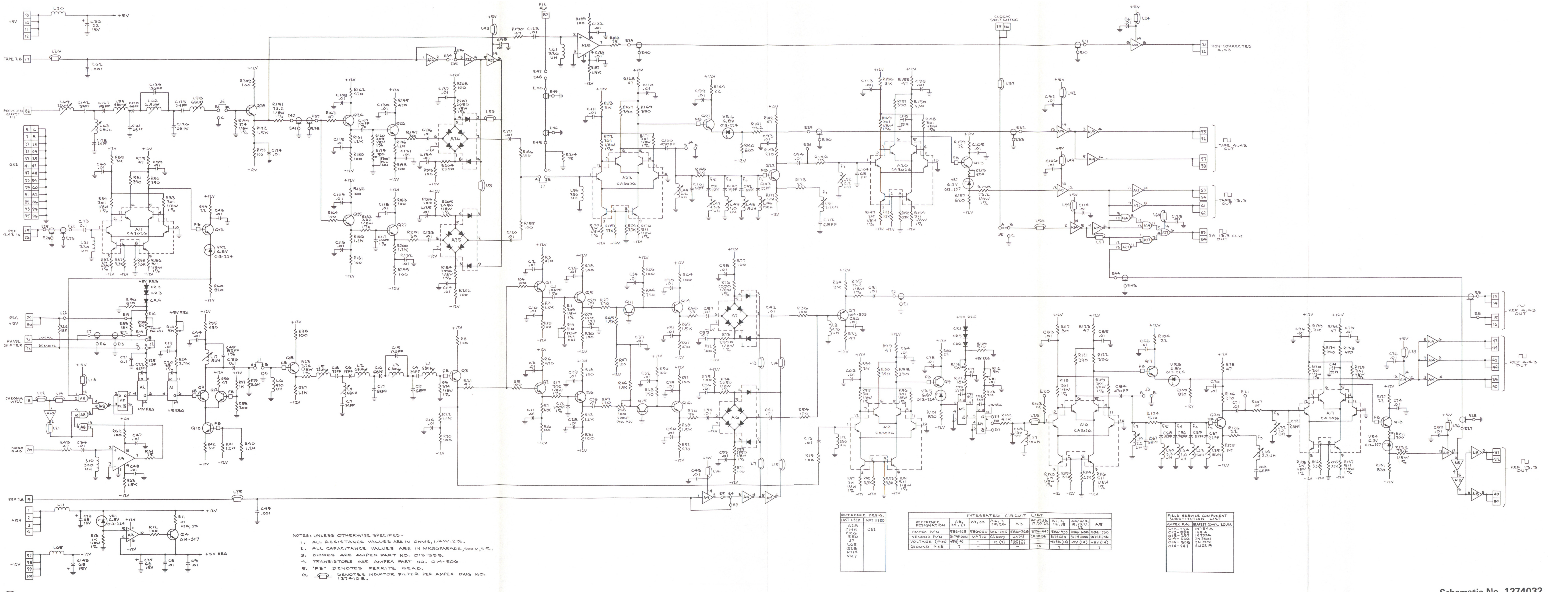

NOTES: UNLESS OTHERWISE SPECIFIED-

1. ALL RESISTANCE VALUES ARE IN OHMS, 1/4W, 2%.
2. ALL CAPACITANCE VALUES ARE IN MICROFARADS, 500V, 5%.
3. DIODES ARE AMPEX PART NO. 013-599.
4. TRANSISTORS ARE AMPEX PART NO. 014-506
5. "FB" DENOTES FERRITE BEAD.
6. (symbol) DENOTES INDUCTOR FILTER PER AMPEX DWG NO. 1374108.

REFERENCE DESIG.	
LAST USED	NOT USED
A28	C32
C145	
CR6	
E50	
J7	
L65	
Q28	
R214	
VR7	

INTEGRATED CIRCUIT LIST

REFERENCE DESIGNATION	A8, 24, 27	A9, 28	A6, 7, 25, 26	A3	A11, 12, 16, 17, 20, 23	A1, 2, 13, 15	A4, 10, 14, 18, 19, 21, 22	A5
AMPEX P/N	586-168	586060	586-255	586-268	586-447	586-533	586-688	586-700
VENDOR P/N	SN74H00N	UA710	CA3019	UA741	CA3026	SN74121N	SN74H04N	SN74H74N
VOLTAGE (PIN)	+5V (14)	–	-12 (7)	+12V (11) -12V (6)	–	+5V REG (14)	+5V (14)	+5V (14)
GROUND PINS	7	–	–	–	10	7	7	7

FIELD SERVICE COMPONENT SUBSTITUTION LIST	
AMPEX P/N	NEAREST COM'L. EQUIV.
013-224	1N754A
013-599	1N914
013-257	1N753A
014-506	2N2501
014-505	2N3251
014-247	2N2219

(A)

Schematic No. 1374032.
Clock Generator PWA, PAL/SECAM, Board No. 20

ITEM NO.	AMPEX PART NO.	REFERENCE NUMBER	DESCRIPTION	JEDEC NO. OR MFR. PART NO.
	1374169-01		BURST STORE GENERATOR MODULE ASSEMBLY	
1	1374042-01		BURST STORE GENERATOR PWA	
2	1373285-21		OVERLAY	
3	1373272-01		SHIELD, PWB	
4	1373273-01		HANDLE, MODULE	
5	1373227-01		CONTACT, GND	
6	471-325		SCREW, MACH, FLAT HD, NO. 4-40 X 0.188 LG	
7	473-325		SCREW, MACH, PAN HD, XREC, NO. 4-40 X 0.325 LG	
8	496-004		NUT, KEP, NO. 4	
9	501-169		WASHER, PLAIN, NO. 4	
10	250-188		BUMPER, PAD, BK RBR, ADH BACK	
				B

SHEET 1 OF 1

ITEM NO.	AMPEX PART NO.	REFERENCE NUMBER	DESCRIPTION	JEDEC NO. OR MFR. PART NO.
	1374042-01		BURST STORE GENERATOR PWA, BD NO. 21	
3	1374044		SCHEMATIC	
7	1374106-01		TRANSFORMER, TOROID	
9	013-723	CR1-16	DIODE	FD777
10	581-247	CR17	DIODE, MTCHD QUAD	HP2970
12	014-505	Q1,3,5,7,9,11,13, 15,17,21,23,25, 27,29,31,34, 37-44,46,47	TRANSISTOR	2N3251
13	014-506	Q48	TRANSISTOR	2N2501
14	014-581	Q2,4,6,8,10,12, 14,16,18,20,22, 24,26,28,30,32, 33,35,36	TRANSISTOR	2N2369A
15	580-133	Q45	TRANSISTOR	2N4093
17	030-056	C1,9,14,18,26,28, 32,35,37-42,54, 57,60	CAPACITOR, CER, 0.02 UF, 100V, 20%	
18	030-057	C2-6,8,13,15-17, 20-24,27,30,31, 36,43,45,50,51	CAPACITOR, CER, 0.01 UF, 100V, 20%	
19	030-963	C7,44,55,65,62,68	CAPACITOR, CER, 0.1 UF, 100V, 10%	
20	034-206	C11	CAPACITOR, MICA, 18 PF, 500V, 5%	
21	034-177	C29	CAPACITOR, MICA, 100 PF, 500V, 5%	
22	034-182	C52	CAPACITOR, MICA, 56 PF, 500V, 5%	
23	067-033	C56,58,59,61,63, 64,66,67	CAPACITOR, TANT, 2.2 UF, 20V, 20%	
24	034-288	C46	CAPACITOR, MICA, 390 PF, 500V, 5%	
25	034-962	C12	CAPACITOR, MICA, 33 PF, 500V, 5%	
26	037-472	C25	CAPACITOR, TANT, 4.7 UF, 10V, 10%	
27	037-749	C10,33,34,53	CAPACITOR, TANT, 68 UF, 15V, 10%	
28	037-991	C47-49	CAPACITOR, TANT, 22 UF, 15V, 10%	
29	056-163	C19	CAPACITOR, MICA, 470 PF, 500V, 5%	
30	226-035	L1,2,4,5	CORE, SIX APERTURE	
31	540-073	L3	INDUCTOR, FXD, 390 UH, 5%	
32	057-056	R100	RESISTOR, MF, 22 OHM, 1/4W, 2%	
33	057-063	R101	RESISTOR, FXD, MF, 43 OHM, 1/4W, 2%	
34	057-064	R36	RESISTOR, FXD, MF, 47 OHM, 1/4W, 2%	
35	057-072	R82	RESISTOR, FXD, MF, 100 OHM, 1/4W, 2%	
36	057-076	R38	RESISTOR, FXD, MF, 150 OHM, 1/4W, 2%	
37	057-079	R37,39	RESISTOR, FXD, MF, 200 OHM, 1/4W, 2%	
38	057-082	R83	RESISTOR, FXD, MF, 270 OHM, 1/4W, 2%	
				H

ASSEMBLY NO. 1374042 TITLE BURST STORE GENERATOR PWA, BD NO. 21

ITEM NO.	AMPEX PART NO.	REFERENCE NUMBER	DESCRIPTION	JEDEC NO. OR MFR. PART NO.
39	057-083	R42,45,46,49,50, 53,54,57,58,61,62 65,66,69,70,73, 115	RESISTOR, FXD, MF, 300 OHM, 1/4W, 2%	
40	057-088	R74-81	RESISTOR, FXD, MF, 470 OHM, 1/4W, 2%	
41	057-089	R28-35,99	RESISTOR, FXD, MF, 510 OHM, 1/4W, 2%	
42	041-007	R40	RESISTOR, COMP, 750 OHM, 1/2W, 5%	
43	057-094	R41	RESISTOR, FXD, MF, 820 OHM, 1/4W, 2%	
44	057-097	R114	RESISTOR, FXD, MF, 1.1K, 1/4W, 2%	
45	057-100	R16,103,118	RESISTOR, FXD, MF, 1.5K, 1/4W, 2%	
46	057-103	R1-14,18-27,116	RESISTOR, FXD, MF, 2K, 1/4W, 2%	
47	057-108	R44,48,52,56,60, 64,68,72	RESISTOR, FXD, MF, 3.3K, 1/4W, 2%	
48	057-110	R43,47,51,55,59, 63,67,71	RESISTOR, FXD, MF, 3.9K, 1/4W, 2%	
49	057-113	R113	RESISTOR, FXD, MF, 5.1K, 1/4W, 2%	
50	057-105	R102	RESISTOR, FXD, MF, 2.4K, 1/4W, 2%	
51	058-563	R111	RESISTOR, VAR, 20 OHM, 1/2W, 10%	
52	044-944	R15,17,117	RESISTOR, VAR, 5K, 1/2W, 20%	
55	1374157-07	R84-98	RESISTOR, SELECTED	
56	1374157-08	R104-110	RESISTOR, SELECTED, 499 OHM, 0.1W, 0.1%	
57	066-703	R112	RESISTOR, MF, 487 OHM, 1/8W, 1%	
58	143-981		JACK, PC, TIP	
59	280-130		SPACER, XSTR, REF: Q1-36, 45-48	
64	586-168	A35,53	INTEGRATED CIRCUIT	SN74H00N
65	586-268	A55-63	INTEGRATED CIRCUIT	UA741C
66	586-287	A39,40,42,43	INTEGRATED CIRCUIT	SN74H51N
67	586-497	A25-32	INTEGRATED CIRCUIT	SN7495AN
68	586-533	A15,16,54	INTEGRATED CIRCUIT	SN74121N
69	586-688	A13,14,17,38,41, 44,51,52	INTEGRATED CIRCUIT	SN74H04N
70	586-700	A1-12,18,45-50	INTEGRATED CIRCUIT	SN74H74N
71	586-738	A33	INTEGRATED CIRCUIT	SN74H20N
72	586-800	A34	INTEGRATED CIRCUIT	SN74193N
73	586-919	A36,37	INTEGRATED CIRCUIT	SN7489N
74	587-033	A19-24	INTEGRATED CIRCUIT	SN74170N
77	602-012		PLUG, SHORTING, REF: J1-3	
79	935-035		BEAD, FERRITE, 0.125 LG	

H

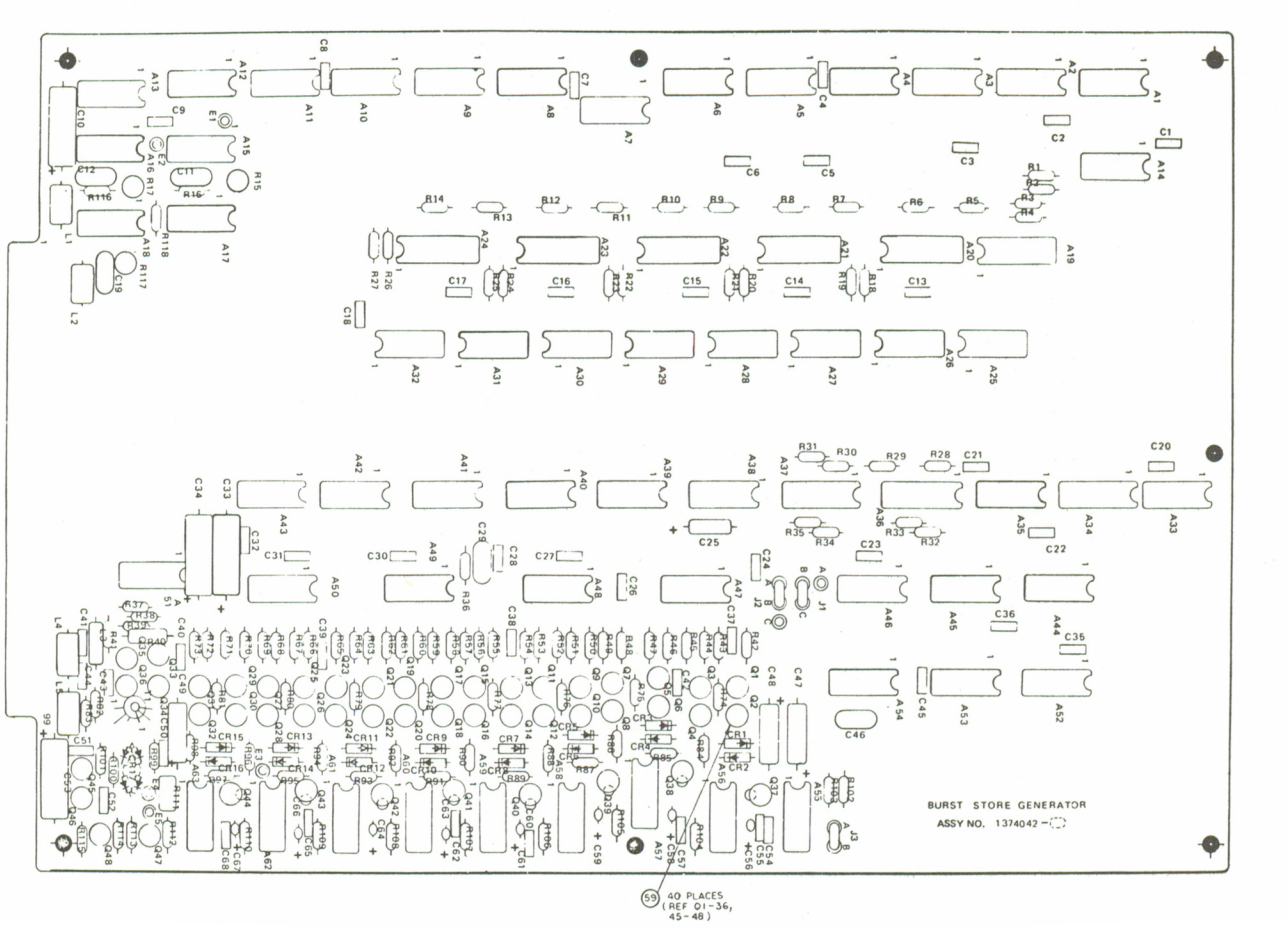

Assembly No. 1374042. Burst Store Generator PWA, Board No. 21

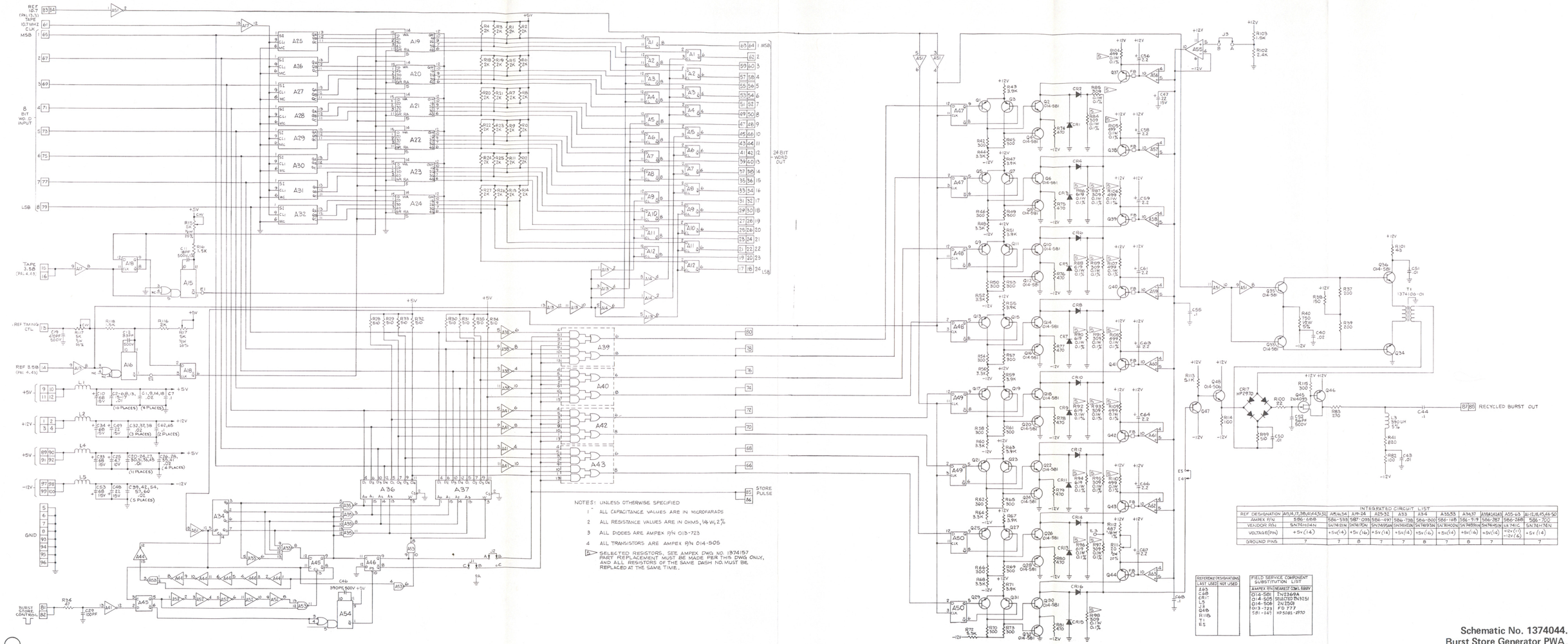

INTEGRATED CIRCUIT LIST

REF DESIGNATION	A1|A4,17,38|A14,45,51	A5,46,54	A9-24	A25-32	A33	A34	A35,55	A36,37	A39|42|43	A40-41	A47-50	A1-12,45,46-50
AMPEX P/N	586-696	586-538	587-095	586-497	586-738	586-800	586-145	586-719	586-767	586-768	586-700	
VENDOR P/N	SN74S124N	SN74121N	SN74170N	SN74S95AN	SN74H10N	SN74193N	SN74H00N	SN74S86N	SN74H51N	UA741C	SN74174N	
VOLTAGE(PIN)	+5V(14)	+5V(14)	+5V(16)	+5V(14)	+5V(14)	+5V(16)	+5V(14)	+5V(16)	+5V(14)	+12V(11) +12V(6)	+5V(14)	
GROUND PINS	7	7	8	7	7	8	7	8	7	7	7	

REFERENCE DESIGNATIONS

LAST USED	NOT USED
A65	
C68	
CR17	
L5	
L3	
Q48	
R118	
T1	
ES	

FIELD SERVICE COMPONENT SUBSTITUTION LIST

AMPEX P/N	NEAREST COML EQUIV
014-581	2N2369A
014-505	SELECTED 2N3251
014-506	2N2369
013-723	FD 777
581-247	HP5081-2970

Schematic No. 1374044.
Burst Store Generator PWA,
Board No. 21

ITEM NO.	AMPEX PART NO.	REFERENCE NUMBER	DESCRIPTION	JEDEC NO. OR MFR. PART NO.
	1374170-01		256 WORD MEMORY MODULE ASSEMBLY, NTSC/PAL-M	
1	1374050-02		256 WORD MEMORY PWA	
2	1373285-22		OVERLAY	
3	1373272-01		SHIELD, PWB	
4	1373273-01		HANDLE, MODULE	
5	1373227-01		CONTACT, GND	
6	471-325		SCREW, MACH, FLAT HD, NO. 4-40 X 0.188 LG	
7	473-325		SCREW, MACH, PAN HD, XREC, NO. 4-40 X 0.325 LG	
8	496-004		NUT, KEP, NO. 4	
9	501-169		WASHER, PLAIN, NO. 4	
10	250-188		BUMPER, PAD, BLK RBR, ADHESIVE BACK	
				B

SHEET 1 OF 1

ITEM NO.	AMPEX PART NO.	REFERENCE NUMBER	DESCRIPTION	JEDEC NO. OR MFR. PART NO.
	1374050-02		256 WORD MEMORY PWA, BD NO. 22, NTSC/PAL-M	
3	1374052		SCHEMATIC	
9	030-057	C1-18,20,31	CAPACITOR, CER, 0.01 UF, 100V, 20%	
10	037-749	C30	CAPACITOR, TANT, 68 UF, 15V, 10%	
11	034-943	C21,32	CAPACITOR, MICA, 27 PF, 500V, 5%	
12	056-163	C22-29	CAPACITOR, MICA, 470 PF, 500V, 5%	
13	034-942	C19	CAPACITOR, MICA, 36 PF, 500V, 5%	
15	057-107	R1-25,30	RESISTOR, FILM, 3K, 1/4W, 2%	
16	057-103	R26,27,31	RESISTOR, FILM, 2K, 1/4W, 2%	
17	044-944	R28,32	RESISTOR, VAR, 5K, 1/2W, 20%	
18	044-943	R29	RESISTOR, VAR, 2K, 1/2W, 20%	
20	226-035	L1	CORE, SIX APERTURE	
23	586-287	A36,37,44,45	INTEGRATED CIRCUIT	74H51
24	586-533	A42,51,52	INTEGRATED CIRCUIT	74121
25	586-554	A39,47	INTEGRATED CIRCUIT	7483
26	586-688	A1,10-13,13,22-24,33-35,43,48-50	INTEGRATED CIRCUIT	74H04
27	586-700	A41	INTEGRATED CIRCUIT	74H74
28	586-800	A38,46	INTEGRATED CIRCUIT	74193
29	587-040	A2-9,14-21, 25-32,40	INTEGRATED CIRCUIT	93410
				E

SHEET 1 OF 1

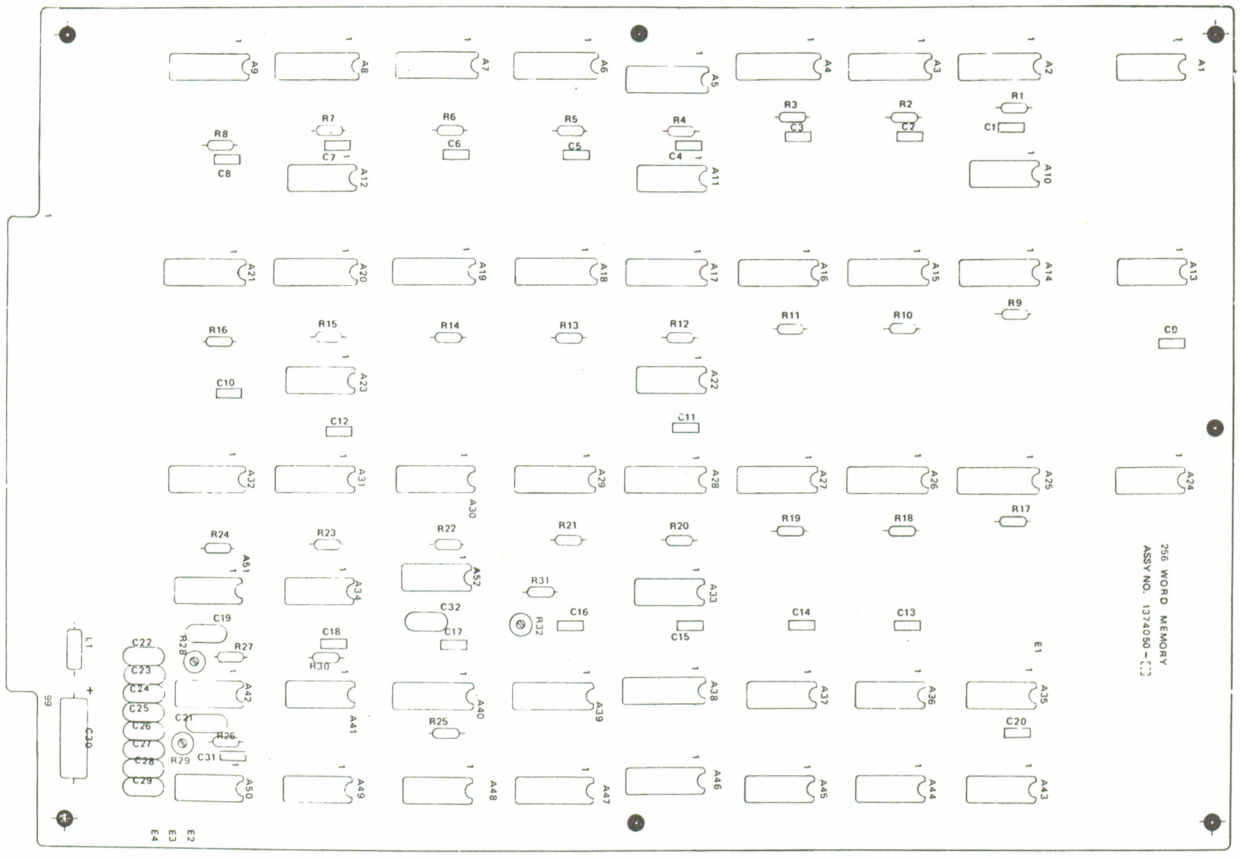

Assembly No. 1374050. 256 Word Memory PWA, Board No. 22, NTSC/PAL-M

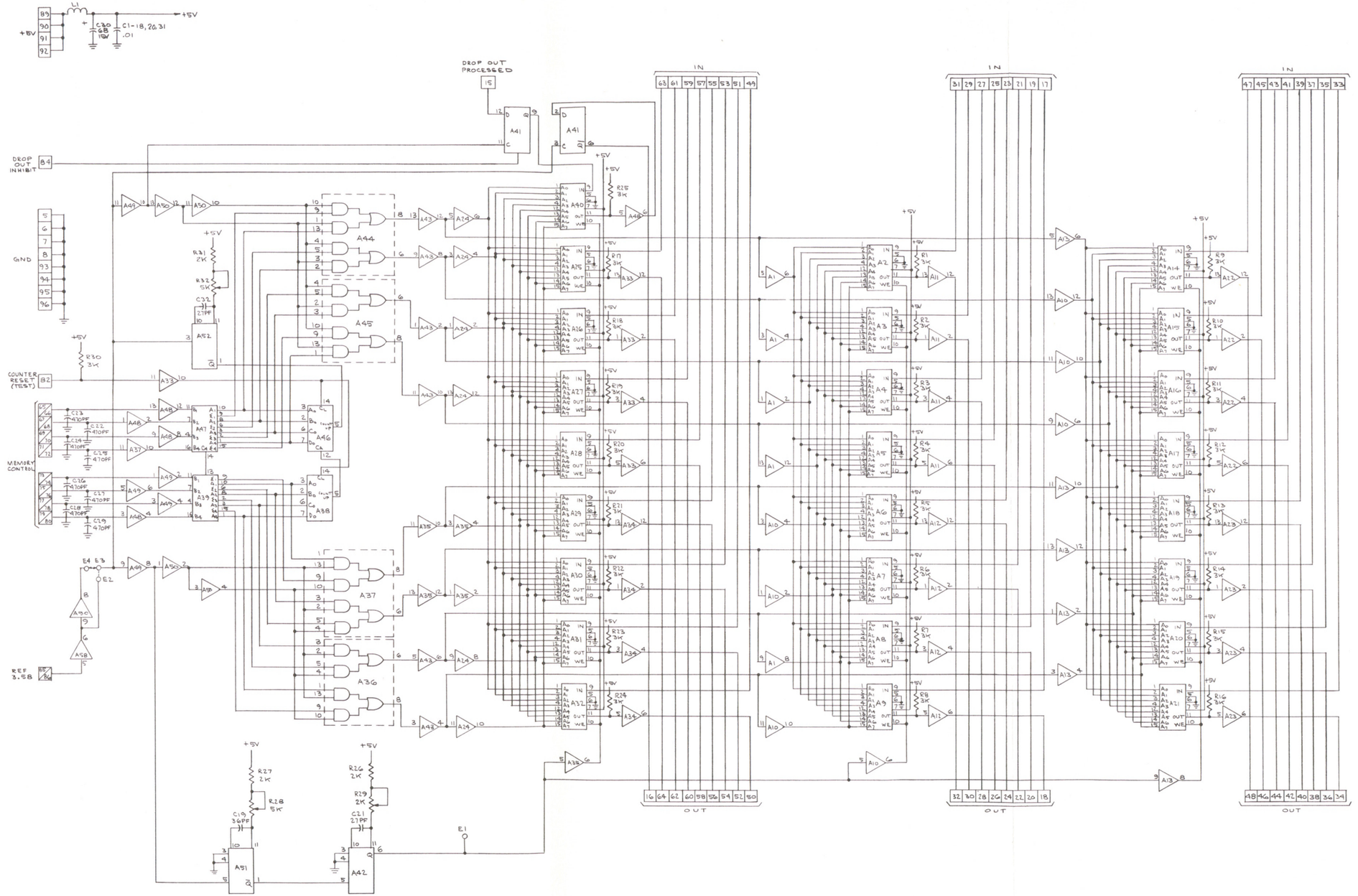

NOTES: UNLESS OTHERWISE SPECIFIED -
1. ALL CAPACITANCE VALUES ARE IN MICROFARADS, 100V.
2. ALL RESISTANCE VALUES ARE IN OHMS, 1/4W, 2%.

REF DESIGNATIONS	
LAST USED	NOT USED
A52 C32 E4 L1 R32	

INTEGRATED CIRCUIT LIST							
REFERENCE DESIGNATION	A39, 47	A1, 10-18, 22-24, 33-35, 43, 48-50	A36, 37, 44, 45	A41	A42, 51, 52	A38, 46	A2-9, 14-21, 25-32, 40
AMPEX P/N	586-554	586-688	586-287	586-700	586-533	586-800	587-040
VENDOR P/N	7483	74H04	74H51	74H74	74121	74193	93410
VOLTAGE (PIN)	+5V (8)	+5V (14)	+5V (14)	+5V (14)	+5V (14)	+5V (16)	+5V (16)
GROUND PINS	12	7	7	7	7	8	8

Schematic No. 1374052.
256 Word Memory PWA, NTSC/PAL-M,
Board No. 22

ITEM NO.	AMPEX PART NO.	REFERENCE NUMBER	DESCRIPTION	JEDEC NO. OR MFR. PART NO.
	1374187-01		512 WORD MEMORY MODULE ASSEMBLY, PAL/SECAM	
1	1374054-02		512 WORD MEMORY PWA	
2	1373285-22		OVERLAY	
3	1373272-01		SHIELD, PWB	
4	1373273-01		HANDLE, MODULE	
5	1373227-01		CONTACT, GND	
6	471-325		SCREW, MACH, FLAT HD, NO. 4-40 X 0.188 LG	
7	473-325		SCREW, MACH, PAN HD, XREC, NO. 4-40 X 0.325 LG	
8	496-004		NUT, KEP, NO. 4	
9	501-169		WASHER, PLAIN, NO. 4	
				A

SHEET 1 OF 1

ITEM NO.	AMPEX PART NO.	REFERENCE NUMBER	DESCRIPTION	JEDEC NO. OR MFR. PART NO.
	1374054-02		512 WORD MEMORY PWA, BD NO. 22, PAL/SECAM	
3	1374056		SCHEMATIC	
7	030-056	C20,21,31,39	CAPACITOR, CER, 0.02 UF, 100V, 20%	
8	030-057	C1-19,22-30,32-34,36-38,45,46,54,55	CAPACITOR, CER, 0.01 UF, 100V, 20%	
9	037-749	C52	CAPACITOR, TANT, 68 UF, 15V, 10%	
11	056-163	C40-43,47-51	CAPACITOR, MICA, 470 PF, 500V, 5%	
12	034-208	C53	CAPACITOR, MICA, 30 PF, 500V, 5%	
13	034-963	C35	CAPACITOR, MICA, 15 PF, 500V, 5%	
14	034-943	C44	CAPACITOR, MICA, 27 PF, 500V, 5%	
15	057-096	R1-25	RESISTOR, FILM, 1K, 1/4W, 2%	
16	057-107	R31	RESISTOR, FILM, 3K, 1/4W, 2%	
18	044-944	R26,29,30	RESISTOR, VAR, 5K	
19	057-100	R27	RESISTOR, FILM, 1.5K, 1/4W, 2%	
20	057-103	R28,32	RESISTOR, FILM, 2K, 1/4W, 2%	
22	226-035	L1	INDUCTOR, FXD, FERRITE CHOKE	
25	586-287	A69,73,74,83,84	INTEGRATED CIRCUIT	74H51
26	586-533	A66,68,77	INTEGRATED CIRCUIT	74121
27	586-554	A70,81	INTEGRATED CIRCUIT	7483
28	586-688	A9,10,19-21,30,31,40-42,52,53,63-65,67,72,75,80,85	INTEGRATED CIRCUIT	74H04
29	586-700	A76,78	INTEGRATED CIRCUIT	74H74
30	586-800	A71,82	INTEGRATED CIRCUIT	74193
31	587-040	A1-8,11-18,22-29,32-39,43-51,54-62	INTEGRATED CIRCUIT	93410
32	586-550	A79	INTEGRATED CIRCUIT	7482

C

SHEET 1 OF 1

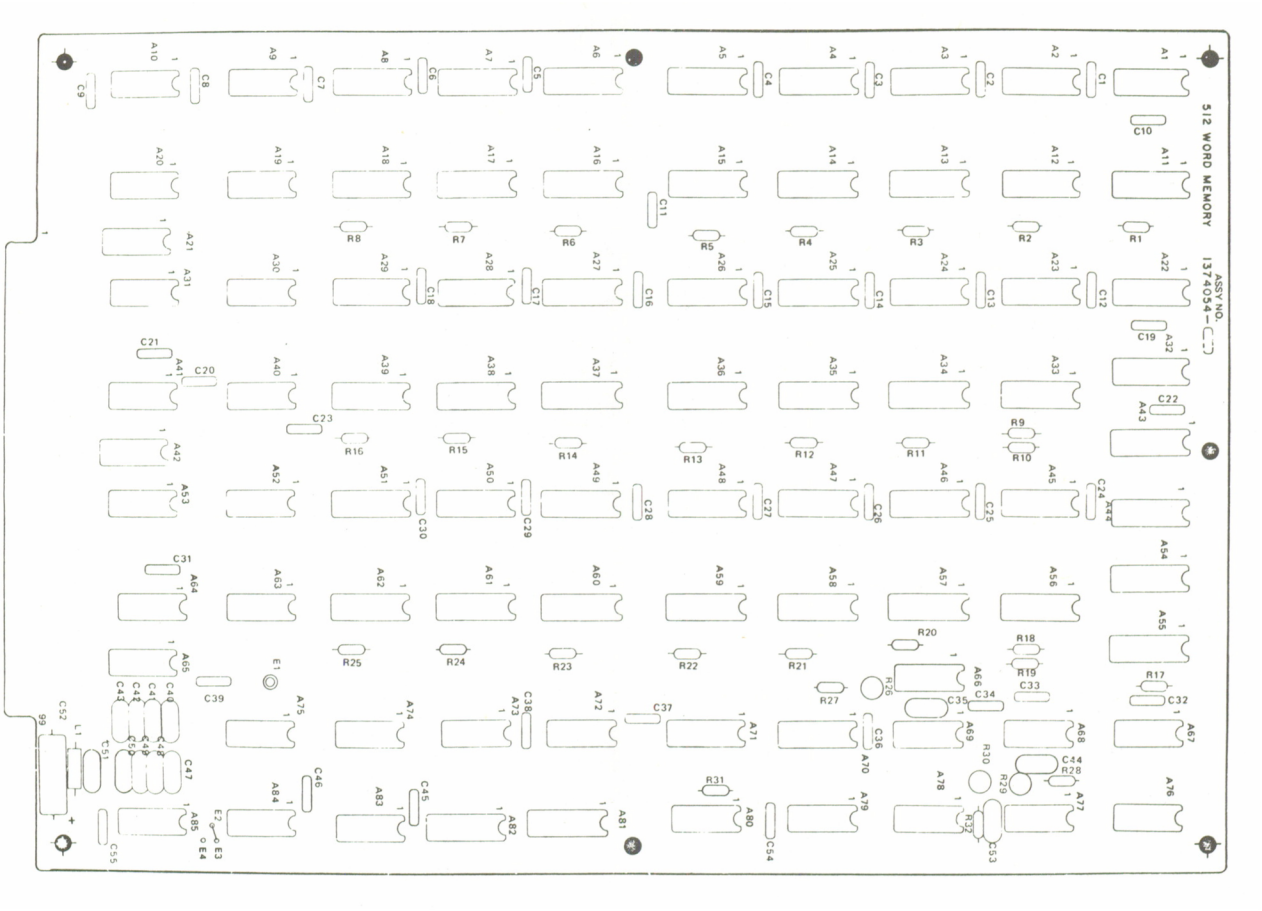

Assembly No. 1374054. 512 Word Memory PWA, Board No. 22, PAL/SECAM

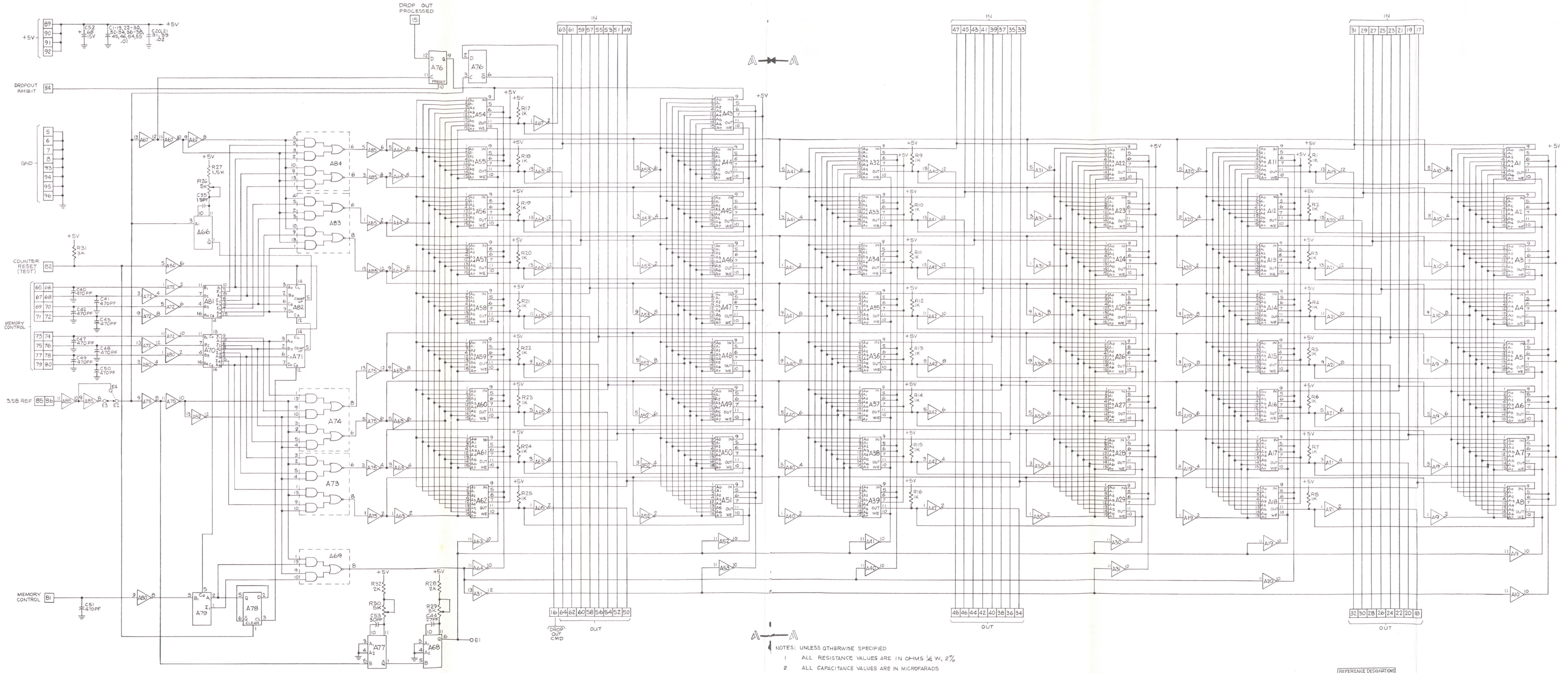

NOTES: UNLESS OTHERWISE SPECIFIED

1 ALL RESISTANCE VALUES ARE IN OHMS 1/4 W, 2%

2 ALL CAPACITANCE VALUES ARE IN MICROFARADS

INTEGRATED CIRCUIT LIST								
REFERENCE DESIGNATIONS	A70,81	A79	A9,10, 19-21, 30, 31, 40-42, 52, 53, 63-65, 67, 72, 75, 80, 85	A69, 73, 74 83, 84	A76,78	A66,68 77	A71,82	A1-8, 11-18, 22-29, 32-39, 43-51, 54-62
AMPEX P/N	586-554	586-550	586-688	586-287	586-700	586-533	586-800	587-040
VENDOR P/N	SN7483N	SN7482N	SN 74H04N	SN74H51N	SN74H74N	SN74121N	SN74193N	94410
VOLTAGE (PIN)	(5) +5V	(4) +5V	(14) +5V	(14) +5V	(14) +5V	(14) +5V	(16) +5V	(16) +5V
GROUND PINS	12	11	7	7	7	7	8	8

REFERENCE DESIGNATIONS	
LAST USED	NOT USED
A85 C55 E4 L1 R32	

Schematic No. 1374056.
512 Word Memory PWA, PAL/SECAM,
Board No. 22

AMPEX 1809178-02

ITEM NO.	AMPEX PART NO.	REFERENCE NUMBER	DESCRIPTION	JEDEC NO. OR MFR. PART NO.
	1374109-01		DATA BYPASS PWA	
1	1373227-01		CONTACT, GROUND	
2	1373272-01		SHIELD, PWB	
3	1373273-01		HANDLE	
4	1373285-33		OVERLAY, MODULE	
10	1374111		SCHEMATIC	
13	030-057	C1-7	CAPACITOR, CER, 0.01 UF, 100V, 20%	
14	037-749	C8	CAPACITOR, TANT, 68 UF, 15V, 10%	
16	226-035	L1	CORE, SIX APERTURE	
18	471-325		SCREW, FH, NO. 4-40 X 0.188 LG	
19	473-325		SCREW, XREC, PAN HD, NO. 4-40 X 0.312 LG	
20	496-004		NUT, ASSEM, NO. 4	
22	501-169		WASHER, PLAIN, NO. 4	
25	586-688	A1,8	INTEGRATED CIRCUIT	SN74H04
26	586-700	A2-7,9-14	INTEGRATED CIRCUIT	SN74H74

SHEET 1 OF 1

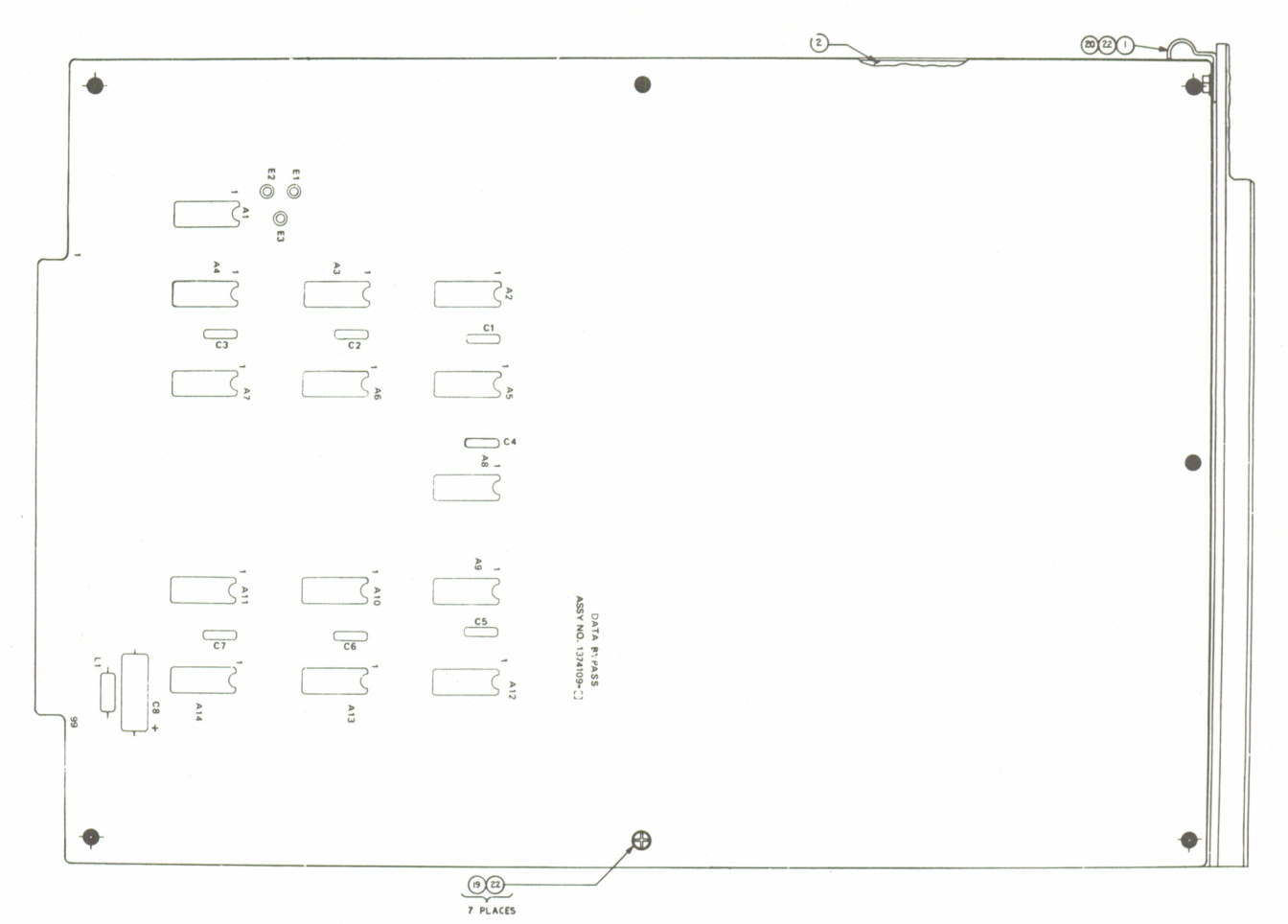

Assembly No. 1374109. Data Bypass PWA

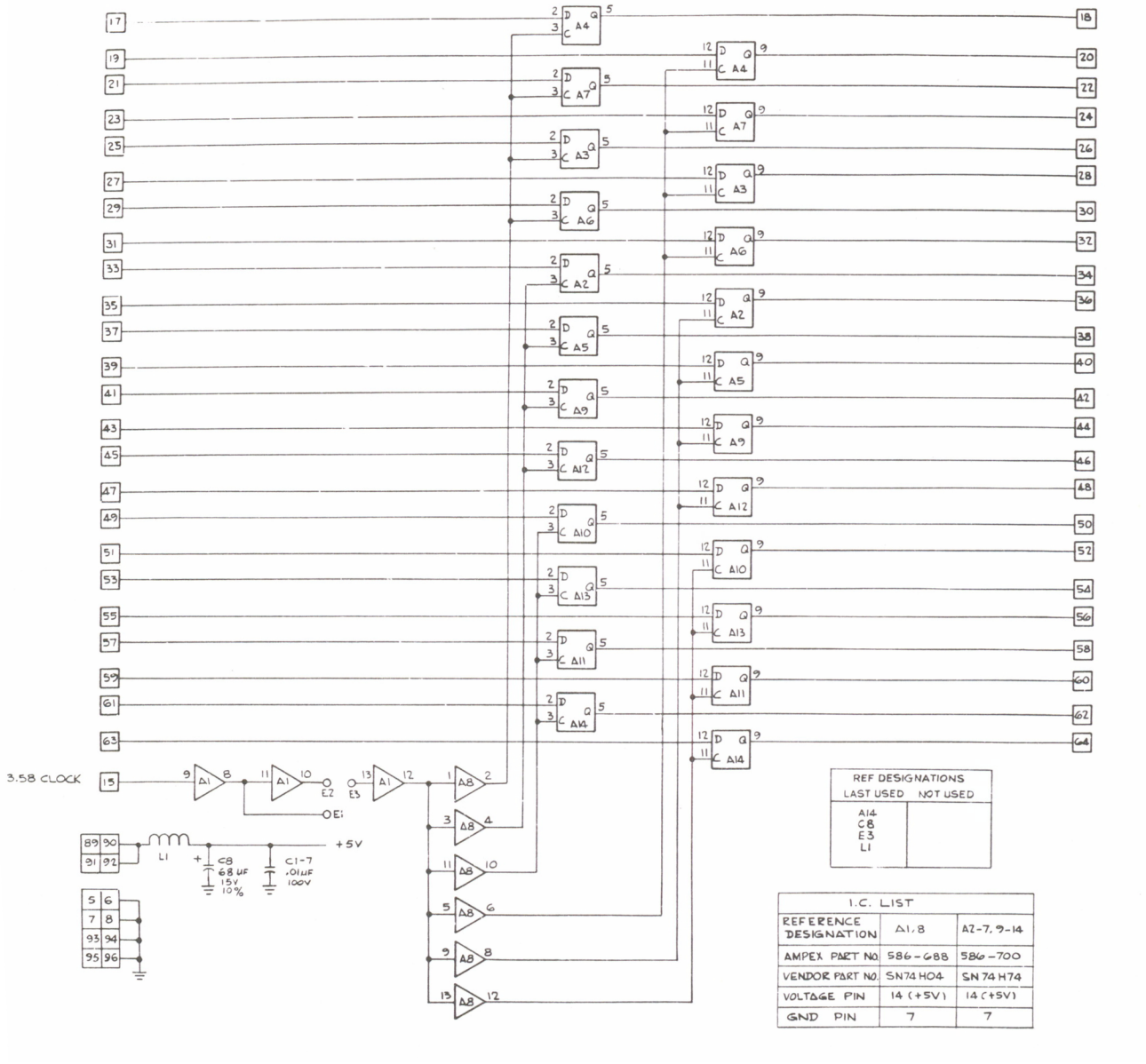

Schematic No. 1374111. Data Bypass PWA

ITEM NO.	AMPEX PART NO.	REFERENCE NUMBER	DESCRIPTION	JEDEC NO. OR MFR. PART NO.
	1374171-01		TWO LINE DELAY MODULE ASSEMBLY, NTSC	
1	1374058-03		TWO LINE DELAY PWA	
2	1373285-23		OVERLAY	
3	1373272-01		SHIELD, PWB	
4	1373273-01		HANDLE, MODULE	
5	1373227-01		CONTACT, GND	
6	471-325		SCREW, MACH, FT HD, NO. 4-40 X 0.188 LG	
7	473-325		SCREW, MACH, PAN HD, XREC, NO. 4-40 X 0.325 LG	
8	496-004		NUT, KEP, NO. 4	
9	501-169		WASHER, PLAIN, NO. 4	
10	250-188		BUMPER, PAD, BK RUBBER, ADHESIVE BACK	
				B

SHEET 1 OF 1

ITEM NO.	AMPEX PART NO.	REFERENCE NUMBER	DESCRIPTION	JEDEC NO. OR MFR. PART NO.
	1374058-03		TWO LINE DELAY PWA, BD NO. 23, NTSC	
3	1374060		SCHEMATIC	
9	013-599	CR1-4	DIODE	1N914
11	014-581	Q5-12	TRANSISTOR	2N2369A
12	014-505	Q1-4	TRANSISTOR	2N3251
13	030-056	C2,4,7,10,11,36, 39	CAPACITOR, CER, 0.02 UF, 100V, 20%	
14	030-057	C5,6,8,12,13,15, 16,17,18,21,25-27, 29-32,34,37,38	CAPACITOR, CER, 0.01 UF, 100V, 20%	
15	034-941	C14,28	CAPACITOR, MICA, 51 PF, 500V, 5%	
16	056-298	C20	CAPACITOR, MICA, 5000 PF, 500V, 5%	
17	037-367	C1,3,35	CAPACITOR, TANT, 2.2 UF, 20V, 10%	
18	037-746	C41	CAPACITOR, TANT, 47 UF, 20V, 10%	
19	037-749	C9,33,40	CAPACITOR, TANT, 68 UF, 15V, 10%	
20	034-182	C19	CAPACITOR, MICA, 56 PF, 500V, 5%	
21	034-177	C22	CAPACITOR, MICA, 100 PF, 500V, 5%	
22	226-035	L1,4	CORE, SIX APERTURE	
24	057-078	R1,3,5,7	RESISTOR, MF, 180 OHM, 1/4W, 2%	
25	057-091	R2,4,6,8	RESISTOR, MF, 620 OHM, 1/4W, 2%	
26	057-095	R49-52	RESISTOR, MF, 910 OHM, 1/4W, 2%	
27	057-107	R9,10,12-15,18-21, 24-27,30-34,37-42, 45-47,54-59,62-65, 68-71,74-78,81-86, 89-91	RESISTOR, MF, 3K, 1/4W, 2%	
28	586-167	A24,25	INTEGRATED CIRCUIT	SN7410N
29	586-166	A40,42,63,65	INTEGRATED CIRCUIT	SN74H30N
30	586-168	A8,37,68	INTEGRATED CIRCUIT	SN74H00N
31	586-287	A13,14,17,18,21, 22,52,53,56,57,60, 61	INTEGRATED CIRCUIT	SN74H51N
32	586-685	A12,15,16,19,20, 23,51,54,55,58,59, 62	INTEGRATED CIRCUIT	SN74H01N
33	586-688	A7,10,11,38,39,41, 64	INTEGRATED CIRCUIT	SN7H04N
34	586-700	A9,28-33,35,45-50	INTEGRATED CIRCUIT	SN74H74N
35	586-533	A26,27,34,36	INTEGRATED CIRCUIT	SN74121N
36	586-800	A43,44,66,67	INTEGRATED CIRCUIT	SN74193N
37	587-093	A1-6,69-74	INTEGRATED CIRCUIT	TMS3412NC
38	143-981	J1-A,B; J2-A,B; J3-A,B	CONNECTOR, JACK, PC TIP	
39	057-089	R11,16,17,22,23, 28,29,35,36,43,44, 48,53,60,61,66,67, 72,73,79,80,87,88, 92	RESISTOR, MF, 510 OHM, 1/4W, 2%	J

ASSEMBLY NO. 1374058 TITLE TWO LINE DELAY PWA, BD NO. 23, NTSC

ITEM NO.	AMPEX PART NO.	REFERENCE NUMBER	DESCRIPTION	JEDEC NO. OR MFR. PART NO.
40	044-943	R94	RESISTOR, VAR, 2K, 1/2W, 20%	
42	280-130		PAD, MTG, TRANSISTORS, TO-18	
44	044-944	R96	RESISTOR, VAR, 5K	
45	057-103	R95	RESISTOR, MF, 2K, 1/4W, 2%	
46	057-100	R93	RESISTOR, MF, 1.5K, 1/4W, 2%	
48	602-012	J1-3	PLUG, SHORTING	J

SHEET 2 OF 2

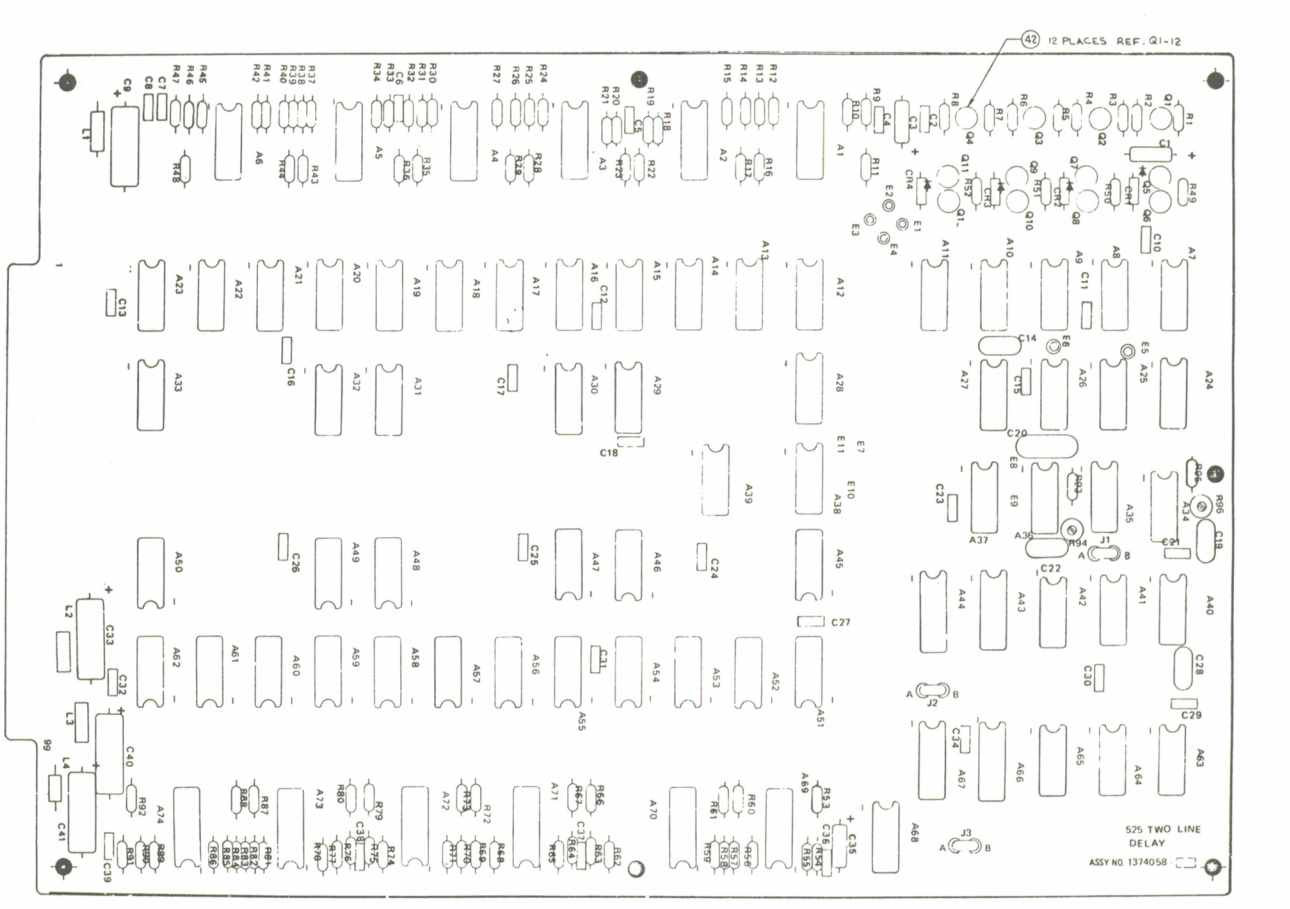

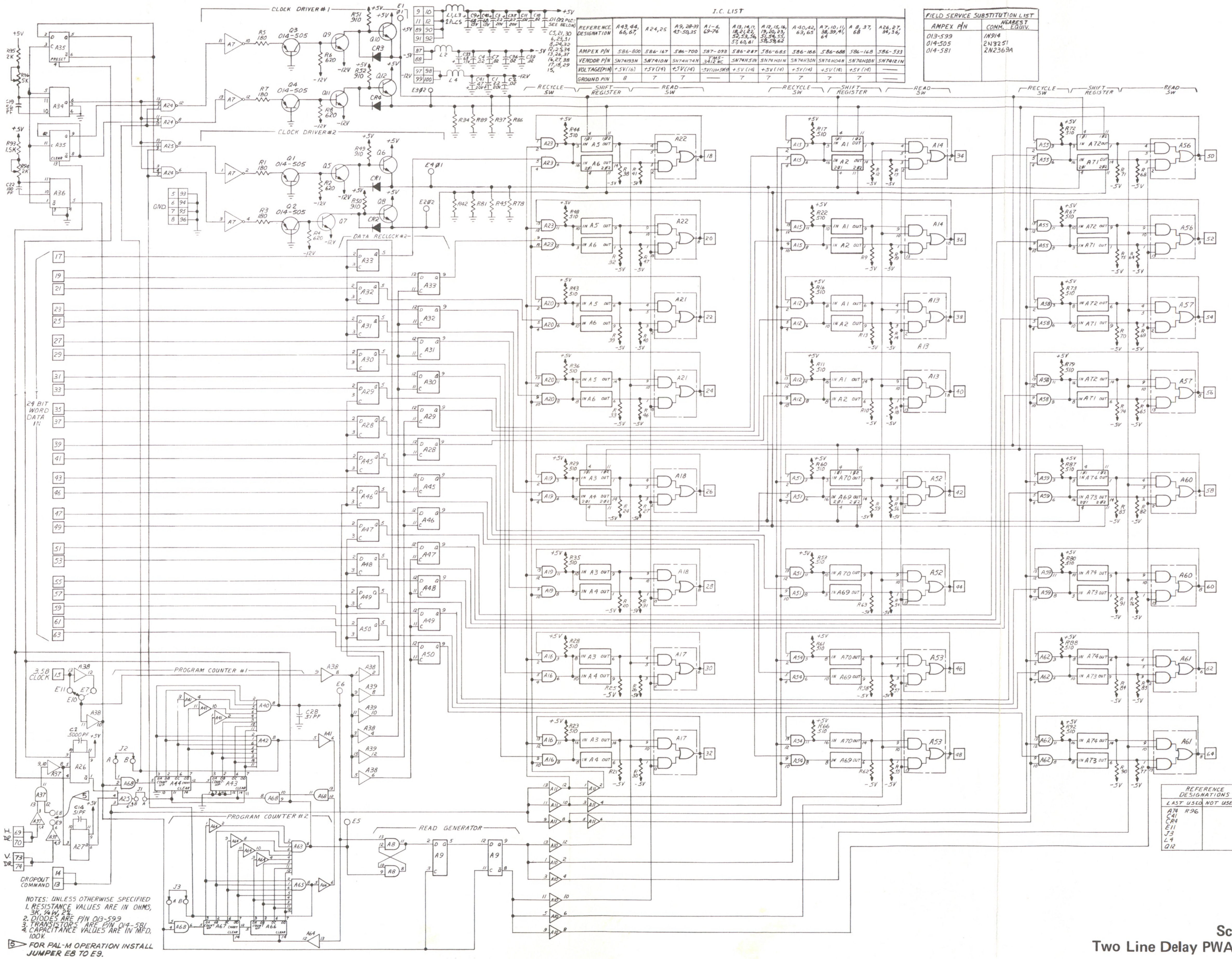

I.C. LIST

REFERENCE DESIGNATION	A43, 44, 66, 67,	A24, 25	A9, 28-33 45-50, 35	A1-6, 69-74	A13, 14, 17, 18, 21, 22, 52, 53, 56, 57, 60, 61	A12, 15, 16, 19, 20, 23, 51, 54, 55, 58, 59, 62	A40, 42, 63, 65	A7, 10, 11, 38, 39, 41, 64	A8, 37, 68	A26, 27, 34, 36,
AMPEX P/N	586-800	586-167	586-700	587-093	586-287	586-685	586-166	586-688	586-168	586-533
VENDOR P/N	SN74193N	SN7410N	SN74H74N	TMS-3412NC	SN74H51N	SN74H01N	SN74H30N	SN74H04N	SN74H00N	SN74121N
VOLTAGE(PIN)	+5V(16)	+5V(14)	+5V(14)	-5V(12)+5V(5)	+5V(14)	+5V(14)	+5V(14)	+5V(14)	+5V(14)	—
GROUND PIN	8	7	7	—	7	7	7	7	7	—

FIELD SERVICE SUBSTITUTION LIST	
AMPEX P/N	NEAREST COMM. EQUIV.
013-599	1N914
014-505	2N3251
014-581	2N2369A

REFERENCE DESIGNATIONS	
LAST USED	NOT USED
A74 R96 C41 CR4 E11 J3 L4 Q12	

NOTES: UNLESS OTHERWISE SPECIFIED

1. RESISTANCE VALUES ARE IN OHMS, 3K, 1/4W, 2%.
2. DIODES ARE P/N 013-599
3. TRANSISTORS ARE P/N 014-581
4. CAPACITANCE VALUES ARE IN MFD, 100V.

5 FOR PAL-M OPERATION INSTALL JUMPER E8 TO E9.

E

Schematic No. 1374060.
Two Line Delay PWA, NTSC, Board No. 23

AMPEX 1809178-02

ITEM NO.	AMPEX PART NO.	REFERENCE NUMBER	DESCRIPTION	JEDEC NO. OR MFR. PART NO.
	1374181-01		TWO LINE DELAY MODULE ASSEMBLY, PAL/SECAM	
1	1374062-01		TWO LINE DELAY PWA (625)	
2	1373285-23		OVERLAY	
3	1373272-01		SHIELD, PWB	
4	1373273-01		HANDLE, MODULE	
5	1373227-01		CONTACT, GND	
6	471-325		SCREW, MACH, FT HD, NO. 4-40 X 0.188 LG	
7	473-325		SCREW, MACH, PAN HD, XREC, NO. 4-40 X 0.325 LG	
8	496-004		NUT, KEP, NO. 4	
9	501-169		WASHER, PLAIN, NO. 4	

—

SHEET 1 OF 1

ITEM NO.	AMPEX PART NO.	REFERENCE NUMBER	DESCRIPTION	JEDEC NO. OR MFR. PART NO.
	1374062-01		TWO LINE DELAY PWA, BD NO. 23, PAL/SECAM	
3	1374064		SCHEMATIC	
5	013-599	CR1-4	DIODE	1N914
7	014-505	Q1,4,7,10	TRANSISTOR	2N3251
8	014-581	Q2,3,5,6,8,9,11,12	TRANSISTOR	2N2369A
10	030-056	C1,4-8,37,40-45	CAPACITOR, CER, 0.02 MFD, 100V, 20%	
11	030-057	C9,11-16,18-21,23, 25-28,31,33,34,36	CAPACITOR, CER, 0.01 MFD, 100V, 20%	
13	034-182	C30	CAPACITOR, MICA, 56 PF, 500V, 5%	
14	034-184	C32	CAPACITOR, MICA, 68 PF, 500V, 5%	
15	034-888	C22	CAPACITOR, MICA, 430 PF, 500V, 5%	
16	034-927	C17	CAPACITOR, MICA, 680 PF, 500V, 5%	
17	034-963	C24	CAPACITOR, MICA, 15 PF, 500V, 5%	
19	037-367	C2,3,38,39	CAPACITOR, TANT, 2.2 MFD, 20V, 10%	
20	037-749	C10,29,35,46	CAPACITOR, TANT, 68 MFD, 15V, 10%	
22	044-944	R45,47,49	RESISTOR, VAR, 5K, 1/2W, 20%	
24	057-078	R1,4,63,66	RESISTOR, MF, 180 OHM, 1/4W, 2%	
25	057-091	R2,5,64,67	RESISTOR, MF, 620 OHM, 1/4W, 2%	
26	057-095	R3,6,65,68	RESISTOR, MF, 910 OHM, 1/4W, 2%	
27	057-103	R48,50	RESISTOR, MF, 2K, 1/4W, 2%	
28	057-107	R7,9,11,13,15,17,19, 21,23,25,27,29,30, 31,33-44,51-62,69, 72,74,76,78,80,82, 84,86,88,90-92,94	RESISTOR, MF, 3K, 1/4W, 2%	
29	057-112	R8,10,12,14,16,18, 20,22,24,26,28,32, 70,71,73,75,77,79, 81,83,85,87,89,93	RESISTOR, MF, 4.7K, 1/4W, 2%	
30	057-121	R46	RESISTOR, MF, 11K, 1/4W, 2%	
32	226-035	L1-4	CORE, SIX APERTURE	
34	280-173		PAD, MTG, TRANSISTOR, TO-18	
36	586-166	A20	INTEGRATED CIRCUIT	SN74H30N
37	586-167	A29	INTEGRATED CIRCUIT	SN74H10N
38	586-168	A8,26,36	INTEGRATED CIRCUIT	SN74H00N
39	586-287	A9	INTEGRATED CIRCUIT	SN74H51N
40	586-533	A19,35,44,45	INTEGRATED CIRCUIT	SN74121N
41	586-685	A10,12,13,15,16,	INTEGRATED CIRCUIT	SN74H01N
42	586-688	A11,14,17,28,33, 34,48,51,54	INTEGRATED CIRCUIT	SN74H04N
43	586-700	A7,21-25,27,30, 38-43,46	INTEGRATED CIRCUIT	SN74H74N
44	586-738	A31	INTEGRATED CIRCUIT	SN74H20N
45	586-800	A32,37	INTEGRATED CIRCUIT	SN74193N
46	587-093	A1-6,56-61	INTEGRATED CIRCUIT	TMS3412NC
				B

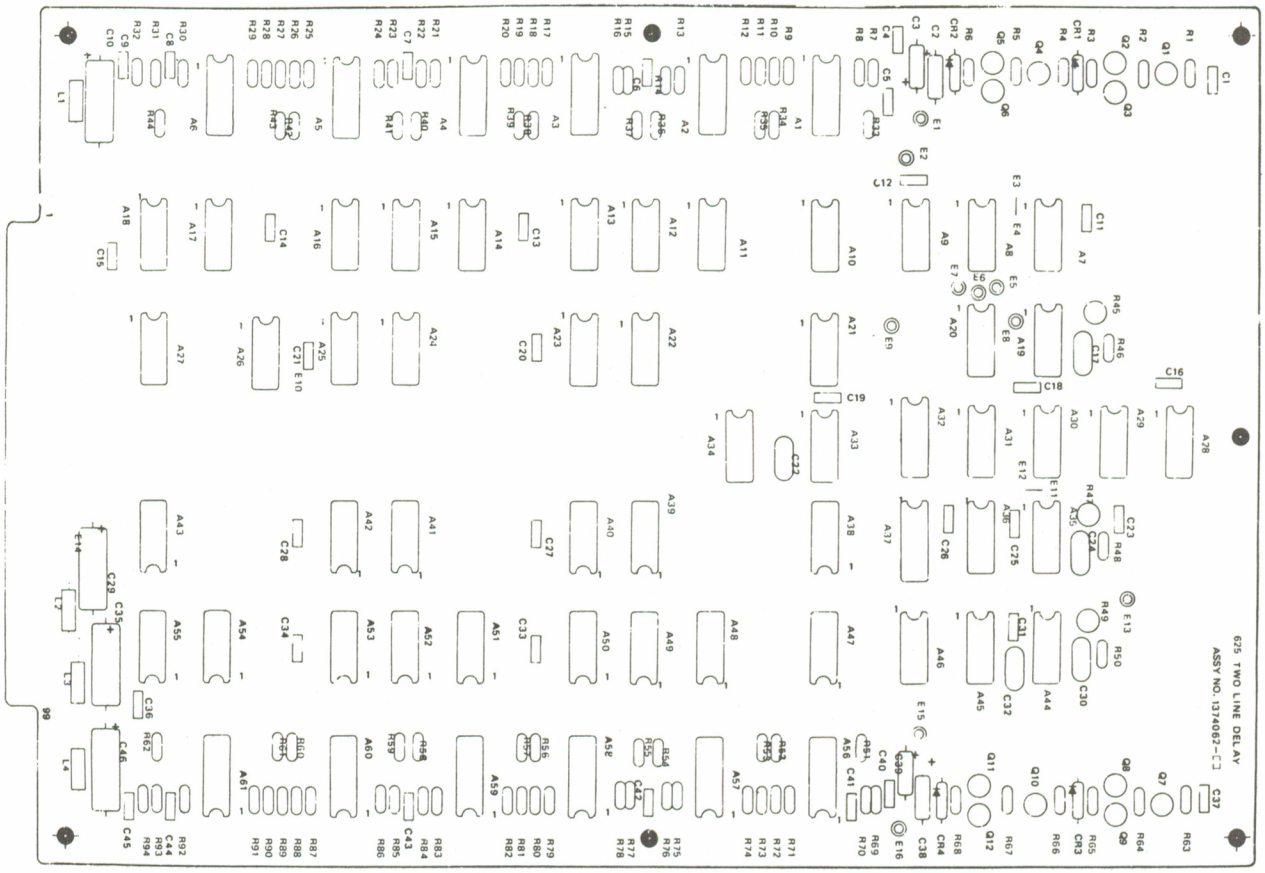

Assembly No. 1374062. Two Line Delay PWA, Board No. 23, PAL/SECAM

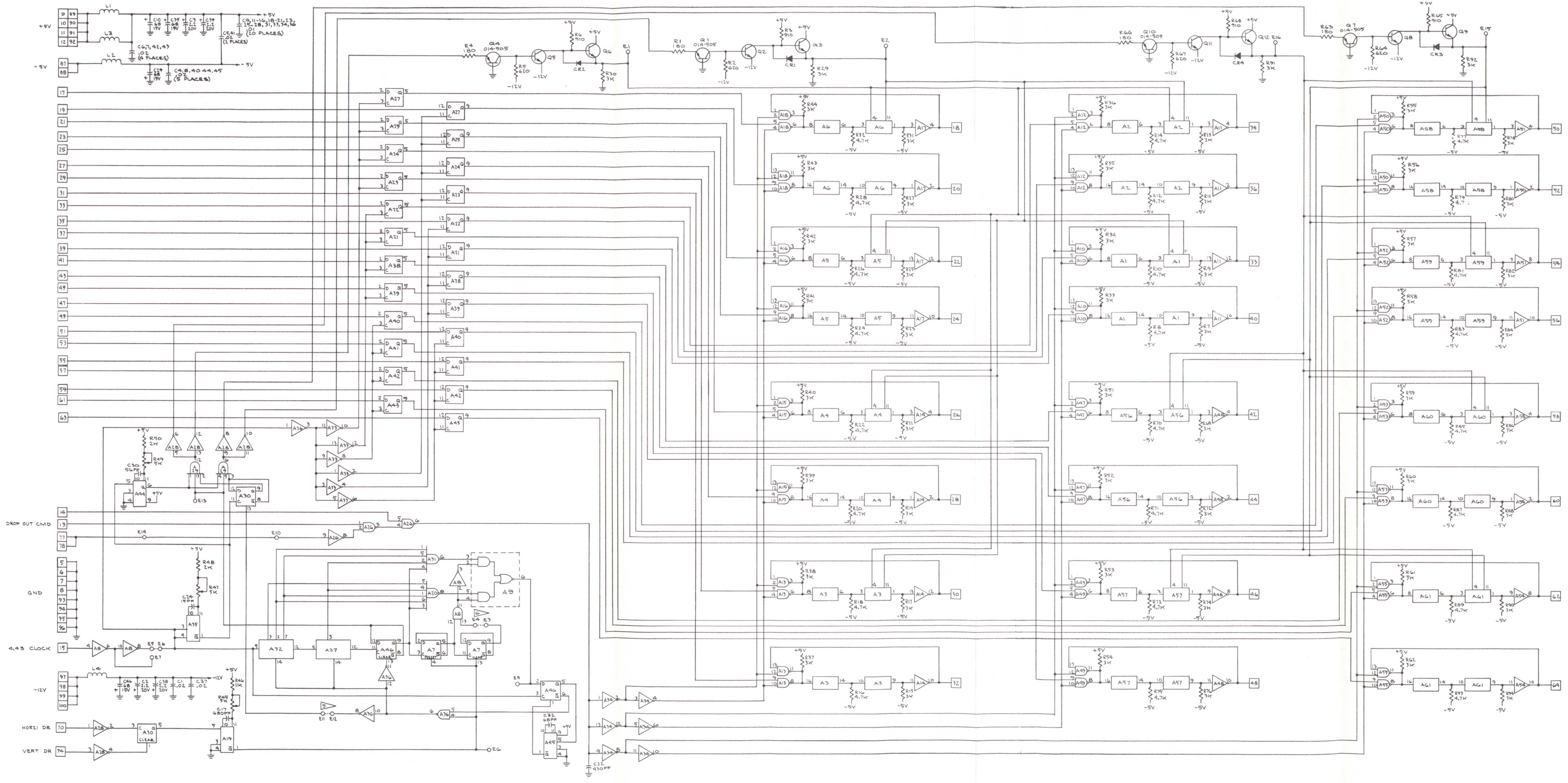

NOTES: UNLESS OTHERWISE SPECIFIED

1. RESISTANCE VALUES ARE IN OHMS, 1/4W, 2%.
2. CAPACITANCE VALUES ARE IN MICROFARADS, 500V.
3. DIODES ARE AMPEX PART NO. 013-599.
4. TRANSISTORS ARE AMPEX PART NO. 014-581.
5. REMOVE STRAP BETWEEN E11 AND E12 WHEN STANDARD PAL IS REQUIRED.
6. REMOVE STRAP BETWEEN E3 AND E4 WHEN SECAM MONOCHROME ONLY IS READ.

REFERENCE DESIGNATIONS	
LAST USED	NOT USED
A61 C46 E16 L4 Q12 R94 CR4	

FIELD SERVICE COMPONENT SUBSTITUTION LIST	
AMPEX P/N	NEAREST COMM EQUIV
013-599	1N914
014-505	2N3251
014-581	2N2369A

INTEGRATED CIRCUIT LIST											
REFERENCE DESIGNATION	A20	A29	A8,26,36	A9	A19,35,44,45	A10,12,13,15,16,18,47,49,50,52,53,55	A11,14,17,28,33,34,48,51,54	A7,21-25,27,30,38-43,46	A31	A32,37	A1-6,56,61
AMPEX P/N	586-166	586-167	586-168	586-287	586-533	586-685	586-688	586-700	586-738	586-800	587-093
VENDOR P/N	SN74H30N	SN74H10N	SN74H00N	SN74H51N	SN74121N	SN74H01N	SN74H04N	SN74H74N	SN74H20N	SN74193N	TMS3412NC
VOLTAGE (PIN)	+5V(14)	+5V(14)	+5V(14)	+5V(14)	+5(14)	+5(14)	+5(14)	+5(14)	+5V(14)	+5(16)	+5V(5) -5V(12)
GROUND PINS	7	7	7	7	7	7	7	7	7	8	—

Schematic No. 1374064.
Two Line Delay PWA, PAL/SECAM,
Board No. 23

AMPEX 1809178-02

ITEM NO.	AMPEX PART NO.	REFERENCE NUMBER	DESCRIPTION	JEDEC NO. OR MFR. PART NO.
	1374172-02		MAIN D/A MODULE ASSEMBLY	
2	1373285-24		OVERLAY	
3	1373272-01		SHIELD, PWB	
4	1373273-13		HANDLE, MODULE	
5	1373227-01		CONTACT, GND	
6	471-325		SCREW, MACH, FLAT HD, NO. 4-40 X 0.188 LG	
7	473-325		SCREW, MACH, PAN HD, XREC, NO. 4-40 X 0.325 LG	
8	496-004		NUT, KEP, NO. 4	
9	501-169		WASHER, PLAIN, NO. 4	
10	058-459	R69	RESISTOR, VAR, 5K, 1/2W, 10%	
11	119-259	S1	SWITCH, TGL, LEVER LOCK	
12	6000001-20		KNOB, BLACK	
14	250-188		BUMPER, PAD, REF: SHIELD	
15	1374066-02		MAIN D/A PWA	
				C

SHEET 1 OF 1

ITEM NO.	AMPEX PART NO.	REFERENCE NUMBER	DESCRIPTION	JEDEC NO. OR MFR. PART NO.
	1374066-02		MAIN D/A PWA, BD NO. 24	
3	1374068		SCHEMATIC	
6	1374106-01	T1	TRANSFORMER, TOROID	
7	013-167	VR1,2	DIODE, ZENER	1N756A
8	013-599	CR1	DIODE	1N914
9	013-723	CR2-17	DIODE	FD777
10	581-247	CR18	DIODE, MTCHD QUAD	HP2970
11	013-983	VR3-10	DIODE, ZENER	1N752A
12	014-247	Q1	TRANSISTOR	2N2219
13	014-505	Q2-9,12,16,18,20, 22,24,26,28,30, 32,34,36,38,40, 42,44,46-48,52, 53,57	TRANSISTOR	2N3251
14	014-506	Q10,11,13,14, 49-51	TRANSISTOR	2N2501
15	014-581	Q15,17,19,21,23, 25,27,29,31,33, 35,37,39,41,43, 45,54-56	TRANSISTOR	2N2369A
17	030-963	C45,82,84,86	CAPACITOR, CER, 0.1 MFD, 100V, 10%	
18	030-056	C3,19,20,24,28-31, 33,36,40,42,51,54, 58,83,85,87	CAPACITOR, CER, 0.02 MFD, 100V, 20%	
19	030-057	C5,6,9,11,12,15,16, 32,34,38,39,43,44, 46-50,53	CAPACITOR, CER, 0.01 MFD, 100V, 20%	
20	030-223	C1	CAPACITOR, CER, 2.2 MFD, 25V	
21	034-540	C57	CAPACITOR, MICA, 51 PF, 500V, 1%	
22	034-221	C21	CAPACITOR, MICA, 200 PF, 500V, 1%	
23	034-259	C22,35	CAPACITOR, MICA, 56 PF,500V, 1%	
24	056-163	C52	CAPACITOR, MICA, 470 PF, 500V, 5%	
25	054-159	C55,56,60-81	CAPACITOR, CER, 100 PF, 50V, 10%	
28	037-749	C25,37,41,59	CAPACITOR, TANT, 68 UF, 15V, 10%	
29	037-985	C26	CAPACITOR, TANT, 15 UF, 20V, 10%	
30	037-991	C2,23,27	CAPACITOR, TANT, 22 UF, 15V, 10%	
31	067-033	C4,7,8,10,13,14, 17,18	CAPACITOR, TANT, 2.2 UF, 20V, 20%	
32	041-006	R15,114	RESISTOR, COMP, 620 OHM, 1/2W, 5%	
34	057-048	R38	RESISTOR, MF, 10 OHM, 1/4W, 2%	
35	057-065	R44	RESISTOR, MF, 51 OHM, 1/4W, 2%	
36	057-063	R113	RESISTOR, MF, 43 OHM, 1/4W, 2%	
37	057-064	R12,37,40	RESISTOR, MF, 47 OHM, 1/4W, 2%	
38	057-107	R74	RESISTOR, MF, 3K, 1/4W, 2%	
				L

ASSEMBLY NO. 1374066 TITLE MAIN D/A PWA, BD NO. 24

ITEM NO.	AMPEX PART NO.	REFERENCE NUMBER	DESCRIPTION	JEDEC NO. OR MFR. PART NO.
39	057-072	R60-63	RESISTOR, MF, 100 OHM, 1/4W, 2%	
40	057-076	R109	RESISTOR, MF, 150 OHM, 1/4W, 2%	
41	057-079	R110,111	RESISTOR, MF, 200 OHM, 1/4W, 2%	
42	057-081	R19	RESISTOR, MF, 240 OHM, 1/4W, 2%	
43	057-083	R55,56,75,78,79, 82,83,86,87,90,91, 94,95,98,99,102, 103,106	RESISTOR, MF, 300 OHM, 1/4W, 2%	
44	057-086	R72	RESISTOR, MF, 390 OHM, 1/4W, 2%	
45	057-088	R47-54,117	RESISTOR, MF, 470 OHM, 1/4W, 2%	
46	057-089	R39,116	RESISTOR, MF, 510 OHM, 1/4W, 2%	
47	041-256	R112	RESISTOR, COMP, 560 OHM, 1/2W, 5%	
48	057-091	R45,58	RESISTOR, MF, 620 OHM, 1/4W, 2%	
50	057-096	R20,107,108	RESISTOR, MF, 1K, 1/4W, 2%	
52	057-104	R64-67	RESISTOR, MF, 2.2K, 1/4W, 2%	
54	057-110	R77,81,85,89,93, 97,101,105	RESISTOR, MF, 3.9K, 1/4W, 2%	
55	057-111	R2	RESISTOR, MF, 4.3K, 1/4W, 2%	
56	057-112	R13,14,57,59	RESISTOR, MF, 4.7K, 1/4W, 2%	
57	057-113	R36	RESISTOR, MF, 5.1K, 1/4W, 2%	
58	057-114	R1	RESISTOR, MF, 5.6K, 1/4W, 2%	
59	057-115	R16,17	RESISTOR, MF, 6.2K, 1/4W, 2%	
61	057-144	R18	RESISTOR, MF, 100K, 1/4W, 2%	
62	057-082	R42	RESISTOR, MF, 270 OHM, 1/4W, 2%	
63	044-941	R115	RESISTOR, VAR,100 OHM, 1/2W, 20%	
64	058-004	R41	RESISTOR, VAR, 1K, 1/2W, 20%	BOURNS 3329H
65	044-940	R46	RESISTOR, VAR, 50 OHM, 1/2W, 20%	
66	058-563	R10	RESISTOR, VAR, 20 OHM, 1/2W, 10%	
67	058-584	R68	RESISTOR, VAR, 20 OHM, 1/2W, 20%	BOURNS 3329H
69	062-642	R73	RESISTOR, MF, 6.81K, 1/8W, 1%	
70	062-895	R11	RESISTOR, MF, 412 OHM, 1/8W, 1%	
71	062-983	R71	RESISTOR, MF, 10K, 1/8W, 1%	
72	062-957	R43,70	RESISTOR, MF, 3.48K, 1/8W, 1%	
74	1374157-07	R21-35	RESISTOR, SELECTED	
75	1374157-09	R3-9	RESISTOR, SELECTED, 422 OHM, 0.1W, 0.1%	
77	280-130		SPACER, XSTR, T0-18, REF: Q2-7	
78	280-998		SPACER, XSTR, T0-5, REF: Q1	
80	541-074	L1	INDUCTOR, VAR, 100 UH, 20%	NYTRONIC VIV
81	541-077	L2	INDUCTOR, VAR, 33 UH, 20%	NYTRONIC VIV
				L

ASSEMBLY NO. 1374066 TITLE MAIN D/A PWA, BD NO. 24

ITEM NO.	AMPEX PART NO.	REFERENCE NUMBER	DESCRIPTION	JEDEC NO. OR MFR. PART NO.
82	226-038	L3-6	CHOKE, FERRITE	
84	586-168	A21	INTEGRATED CIRCUIT	74H00N
85	586-268	A1-11	INTEGRATED CIRCUIT	UA741C
87	586-497	A23-30	INTEGRATED CIRCUIT	7495AN
88	586-533	A31,32	INTEGRATED CIRCUIT	74121N
90	586-688	A17-20,39,46	INTEGRATED CIRCUIT	74H04N
91	586-700	A12-16,22,33-38, 40-45	INTEGRATED CIRCUIT	74H74N
96	932-035		BEAD, FERRITE, 0.125 LG, REF: BASE OF Q2-11,13-15,17,19,21,23, 25,27,29,31,33,35,39,37,41,43,45,47-51	
102	143-981		JACK, PC	
103	602-012	J1,2	PLUG, SHORTING	L

SHEET 3 OF 3

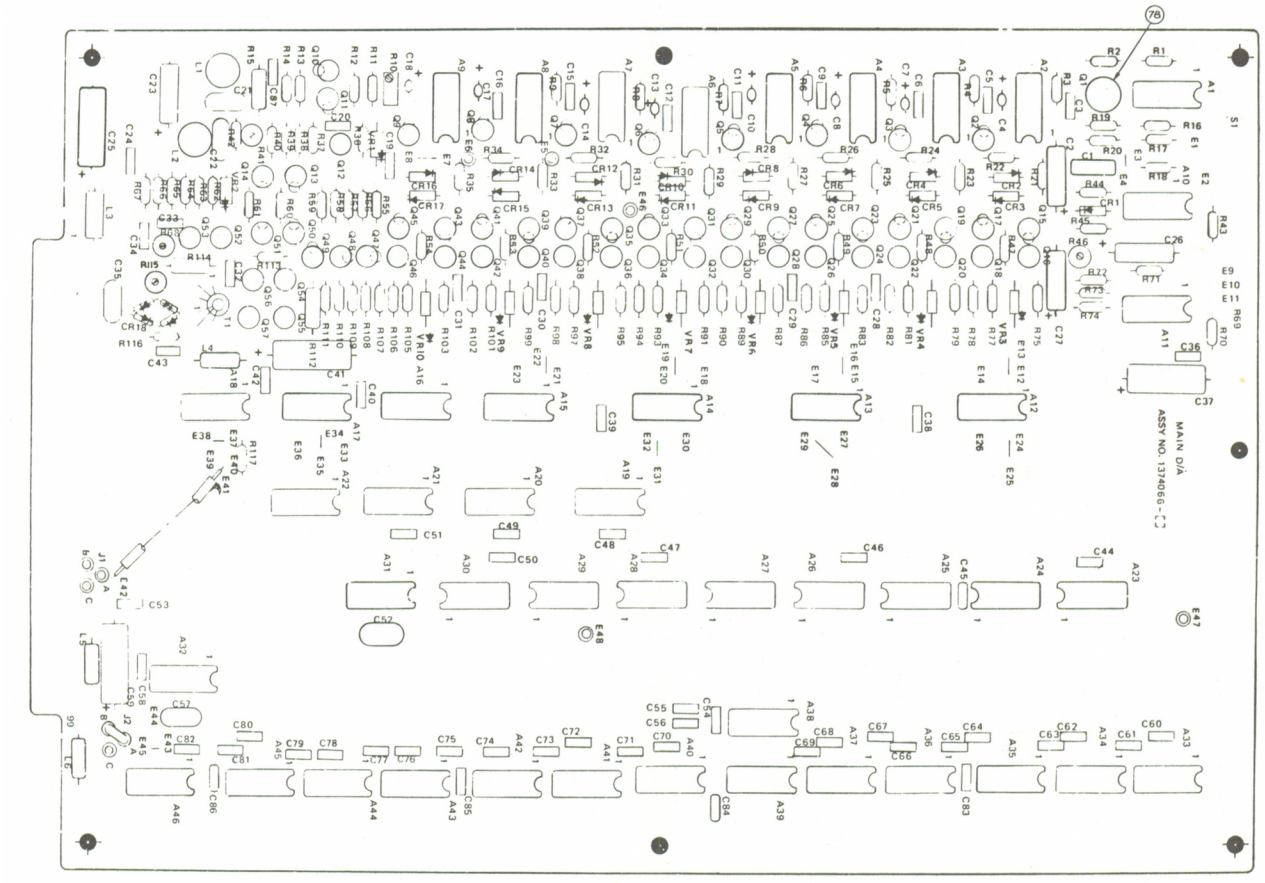

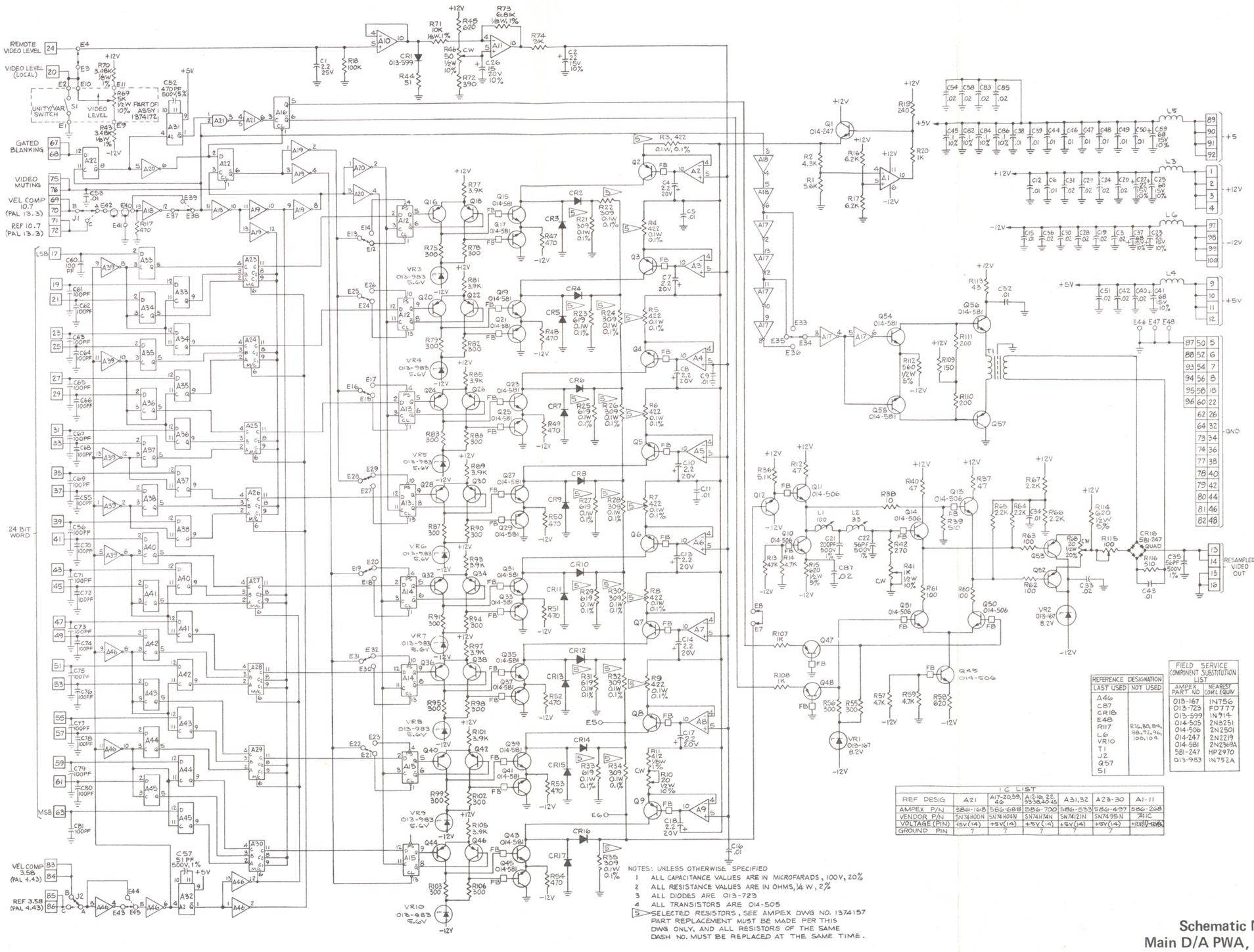

NOTES: UNLESS OTHERWISE SPECIFIED
1. ALL CAPACITANCE VALUES ARE IN MICROFARADS, 100V, 20%
2. ALL RESISTANCE VALUES ARE IN OHMS, 1/4 W, 2%
3. ALL DIODES ARE 013-723
4. ALL TRANSISTORS ARE 014-505
5. SELECTED RESISTORS, SEE AMPEX DWG NO. 1374157 PART REPLACEMENT MUST BE MADE PER THIS DWG ONLY, AND ALL RESISTORS OF THE SAME DASH NO. MUST BE REPLACED AT THE SAME TIME.

REFERENCE DESIGNATION	
LAST USED	NOT USED
A46	
C87	
CR18	
E48	
R117	R76,80,84, 88,92,96, 100,104
L6	
VR10	
T1	
J2	
Q57	
S1	

FIELD SERVICE COMPONENT SUBSTITUTION LIST	
AMPEX PART NO	NEAREST COMP'L EQUIV
013-167	1N756
013-723	FD777
013-599	1N914
014-505	2N3251
014-506	2N2501
014-247	2N2219
014-581	2N2369A
581-247	HP2970
013-983	1N752A

IC LIST

REF DESIG	A21	A17-20,39, 40	A2-16, 22, 33-38, 42-45	A31,32	A23-30	A1-11
AMPEX P/N	586-168	586-688	586-700	586-533	586-497	586-268
VENDOR P/N	SN74H00N	SN74H04N	SN74H74N	SN7412IN	SN7495N	741C
VOLTAGE (PIN)	+5V(14)	+5V(14)	+5V(14)	+5V(14)	+5V(14)	+12V(7) -12V(4)
GROUND PIN	7	7	7	7	7	

Schematic No. 1374068.
Main D/A PWA, Board No. 24

ITEM NO.	AMPEX PART NO.	REFERENCE NUMBER	DESCRIPTION	JEDEC NO. OR MFR. PART NO.
	1374173-01		VIDEO OUTPUT MODULE ASSEMBLY, NTSC/PAL-M	
	1374173-02		VIDEO OUTPUT MODULE ASSEMBLY, PAL/SECAM	
1	1374070-03		VIDEO OUTPUT PWA (NTSC/PAL-M)	
2	1373285-25		OVERLAY	
3	1373272-01		SHIELD, PWB	
4	1373273-01		HANDLE, MODULE	
5	1373227-01		CONTACT, GND	
6	471-325		SCREW, MACH, FLAT HD, NO. 4-40 X 0.188 LG	
7	473-325		SCREW, MACH, PAN HD, XREC, NO. 4-40 X 0.325 LG	
8	496-004		NUT, KEP, NO. 4	
9	501-169		WASHER, PLAIN, NO. 4	
10	1374070-04		VIDEO OUTPUT PWA (PAL/SECAM)	
11	250-188		BUMPER, PAD, BLK RBR, ADH BACK	
				C

ITEM NO.	AMPEX PART NO.	REFERENCE NUMBER	DESCRIPTION	JEDEC NO. OR MFR. PART NO.
	1374070-03		VIDEO OUTPUT PWA, BD NO. 25, NTSC/PAL-M	
	1374070-04		VIDEO OUTPUT PWA, BD NO. 25, PAL/SECAM	
3	1374224		SCHEMATIC	
5	1374190-01	L9	INDUCTOR, ADJ, 10.3 UH (NTSC/PAL-M)	
6	1374190-02	L9	INDUCTOR, ADJ, 8.26 UH (PAL/SECAM)	
7	1374190-03	L7	INDUCTOR, ADJ, 7.83 UH (NTSC/PAL-M)	
8	1374190-04	L5	INDUCTOR, ADJ, 6.96 UH (NTSC/PAL-M)	
9	1374190-05	L7	INDUCTOR, ADJ, 6.25 UH (PAL/SECAM)	
10	1374190-06	L5	INDUCTOR, ADJ, 5.56 UH (PAL/SECAM)	
11	1374190-07	L6	INDUCTOR, ADJ, 3.90 UH (NTSC/PAL-M)	
12	1374190-08	L6	INDUCTOR, ADJ, 3.15 UH (PAL/SECAM)	
13	1374190-09	L8	INDUCTOR, ADJ, 2.60 UH (NTSC/PAL-M)	
14	1374190-10	L8	INDUCTOR, ADJ, 2.1 UH (PAL/SECAM)	
15	1374191-01	T1	TRANSFORMER, VAR, 45.7 UH (NTSC/PAL-M)	
16	1374191-02	T1	TRANSFORMER, TAPPED ADJ, 36.9 UH (PAL/SECAM)	
17	1374191-03	T2	TRANSFORMER, VAR, 30.1 UH (NTSC/PAL-M)	
18	1374191-04	T2	TRANSFORMER, TAPPED, ADJ, 24.3 UH (PAL/SECAM)	
20	013-257	VR5,6,8-11	DIODE, ZENER	1N753A
21	013-332	VR4	DIODE, ZENER	1N750A
22	013-371	VR1,3,7	DIODE, ZENER	1N964B
23	013-383	VR2	DIODE, ZENER	1N757A
24	013-986	CR1	DIODE	1N276
26	014-505	Q4,10,11,17,20, 24,26,32,34,36	TRANSISTOR	2N3251
27	014-506	Q30,31	TRANSISTOR	2N2501
28	014-852	Q12,16	TRANSISTOR	MD2369A
29	014-581	Q1-3,5-9,13-15, 18,19,23,27-29, 33,35,37-39	TRANSISTOR	2N2369A
30	580-133	Q21,25	TRANSISTOR	2N4093
32	030-056	C4,6,9,10,13,14, 26,27,31,37,46, 49,58,59,63,69, 72,77,82,86,98, 99,101,102	CAPACITOR, CER, 0.02 MFD, 100V	
33	030-223	C11,43	CAPACITOR, MONOLYTHIC, 2.2 MFD, 25V	
34	030-963	C5,15,16,18,25, 35,44,47,57,64, 67,71,78,83,88, 93,94	CAPACITOR, CER, 0.1 MFD, 100V	
38	034-219	C23	CAPACITOR, MICA, 120 PF, 500V, 1% (NTSC/PAL-M)	
39	034-224	C52	CAPACITOR, MICA, 160 PF, 500V, 1% (NTSC/PAL-M)	
40	034-239	C52	CAPACITOR, MICA, 130 PF, 500V, 1% (PAL/SECAM)	
41	034-239	C39	CAPACITOR, MICA, 130 PF, 500V, 1% (NTSC/PAL-M)	
42	034-241	C19	CAPACITOR, MICA, 360 PF, 500V, 1% (NTSC/PAL-M)	
43	034-243	C84	CAPACITOR, MICA, 3000 PF, 500V, 1%	
44	034-250	C38	CAPACITOR, MICA, 620 PF, 300V, 1% (NTSC/PAL-M)	
				L

ASSEMBLY NO. 1374070 TITLE VIDEO OUTPUT PWA, BD NO. 25

ITEM NO.	AMPEX PART NO.	REFERENCE NUMBER	DESCRIPTION	JEDEC NO. OR MFR. PART NO.
45	034-251	C12	CAPACITOR, MICA, 39 PF, 500V, ±0.5 PF	
46	034-259	C17	CAPACITOR, MICA, 56 PF, 500V, 1%	
47	034-285	C7,48,51,53,62, 79,91	CAPACITOR, MICA, 75 PF, 500V, 1% (NTSC/PAL-M)	
48	034-285	C7,48,51,62,79, 91	CAPACITOR, MICA, 75 PF, 500V, 1% (PAL/SECAM)	
49	034-287	C74	CAPACITOR, MICA, 300 PF, 500V, 1%	
50	034-287	C19	CAPACITOR, MICA, 300 PF, 500V, 1% (PAL/SECAM)	
51	034-360	C55	CAPACITOR, MICA, 24 PF, 500V, ±0.5 PF	
52	034-373	C103	CAPACITOR, MICA, 2700 PF, 500V, 1%	
53	034-376	C21	CAPACITOR, MICA, 33 PF, 500V, ±0.5 PF (NTSC/PAL-M)	
54	034-540	C42	CAPACITOR, MICA, 51 PF, 500V, 1% (PAL/SECAM)	
55	034-541	C42	CAPACITOR, MICA, 62 PF, 500V, 1% (NTSC/PAL-M)	
56	034-541	C53	CAPACITOR, MICA, 62 PF, 500V, 1% (PAL/SECAM)	
57	034-688	C41,54	CAPACITOR, MICA, 30 PF, 500V, ±0.5 PF (NTSC/PAL-M)	
58	034-759	C40	CAPACITOR, MICA, 15 PF, 500V, ±0.5 PF (NTSC/PAL-M)	
59	034-788	C85	CAPACITOR, MICA, 27 PF, 500V, ±2%	
60	034-788	C21,41	CAPACITOR, MICA, 27 PF, 500V, 2% (PAL/SECAM)	
61	034-945	C20,40	CAPACITOR, MICA, 12 PF, 500V, 5% (PAL/SECAM)	
62	034-945	C108	CAPACITOR, MICA, 12 PF, 500V, 5% (NTSC/PAL-M)	
64	035-730	C97	CAPACITOR, MYLAR, 0.0047 MFD, 50V, 5%	
65	035-846	C73	CAPACITOR, MYLAR, 0.0082 MFD, 50V, 5%	
67	037-164	C2,60	CAPACITOR, TANT, 1 MFD, 35V	
68	037-367	C89,90	CAPACITOR, TANT, 2.2 MFD, 20V	
69	037-740	C33,45,65,76	CAPACITOR, TANT, 33 MFD, 10V	
70	037-749	C1,32,80,87	CAPACITOR, TANT, 68 MFD, 15V	
71	037-991	C3,8,28,30,61, 68,70,75,92,95, 96,100,104,105	CAPACITOR, TANT, 22 MFD, 15V	
73	038-275	C106,107	CAPACITOR, VAR, 5.5 TO 18 PF	
75	041-393	R70	RESISTOR, 1M, 1/4W, 5%	
76	041-776	R71	RESISTOR, 1.8M, 1/4W, 5%	
77	041-801	R37	RESISTOR, 22M, 1/4W, 5%	
79	044-891	R119	RESISTOR, VAR, 200 OHM	
80	044-927	R132	RESISTOR, VAR, 500 OHM	
81	044-943	R184	RESISTOR, VAR, 2K	
82	044-946	R56	RESISTOR, VAR, 20K	
85	056-022	C29	CAPACITOR, MICA, 6.8 PF, 500V, ±0.5 PF	
86	056-022	C108	CAPACITOR, MICA, 6.8 PF, 500V, ±0.5 PF (PAL/SECAM)	
87	056-140	C12,54	CAPACITOR, MICA, 20 PF, 500V, ±0.5 PF (PAL/SECAM)	
88	056-140	C20	CAPACITOR, MICA, 20 PF, 500V, ±0.5 PF (NTSC/PAL-M)	
89	056-203	C38	CAPACITOR, MICA, 510 PF, 500V, 1% (PAL/SECAM)	
90	056-388	C56	CAPACITOR, MICA, 8.2 PF, 500V, ±0.5 PF	
91	056-488	C81	CAPACITOR, MICA, 10 PF, 500V, ±0.5 PF (NTSC/PAL-M)	
				L

ASSEMBLY NO. 1374070 TITLE VIDEO OUTPUT PWA, BD NO. 25

ITEM NO.	AMPEX PART NO.	REFERENCE NUMBER	DESCRIPTION	JEDEC NO. OR MFR. PART NO.
92	056-488	C81	CAPACITOR, MICA, 10 PF, 500V, ±0.5 PF (PAL/SECAM)	
93	056-500	C22	CAPACITOR, MICA, 59 PF, 500V, 1% (NTSC/PAL-M)	
94	056-531	C50	CAPACITOR, MICA, 454 PF, 500V, 1%	
95	056-603	C36	CAPACITOR, MICA, 47 PF, 500V, ±0.5 PF	
96	056-643	C39	CAPACITOR, MICA, 106 PF, 500V, 1% (PAL/SECAM)	
97	056-644	C24	CAPACITOR, MICA, 57 PF, 500V, 1% (PAL/SECAM)	
98	056-645	C24	CAPACITOR, MICA, 71 PF, 500V, 1% (NTSC/PAL-M)	
99	056-661	C23	CAPACITOR, MICA, 96 PF, 500V, 1% (PAL/SECAM)	
100	056-666	C22	CAPACITOR, MICA, 48 PF, 500V, ±0.5 PF (PAL/SECAM)	
102	057-053	R88	RESISTOR, MF, 16 OHM, 1/4W, 2%	
103	057-054	R85	RESISTOR, MF, 18 OHM, 1/4W, 2%	
104	057-064	R66,67,73,74,80, 83,127,140,144, 146,148,149,172, 183	RESISTOR, MF, 47 OHM, 1/4W, 2%	
105	057-068	R7,174	RESISTOR, MF, 68 OHM, 1/4W, 2%	
106	057-069	R8,38,49,53,57, 79,104,139,166	RESISTOR, MF, 75 OHM, 1/4W, 2%	
107	057-071	R82,142	RESISTOR, MF, 91 OHM, 1/4W, 2%	
108	057-072	R47,64,103,114	RESISTOR, MF, 100 OHM, 1/4W, 2%	
109	057-073	R18	RESISTOR, MF, 110 OHM, 1/4W, 2%	
110	057-076	R143,156	RESISTOR, MF, 150 OHM, 1/4W, 2%	
111	057-078	R68	RESISTOR, MF, 180 OHM, 1/4W, 2%	
112	057-079	R51	RESISTOR, MF, 200 OHM, 1/4W, 2%	
113	057-082	R11	RESISTOR, MF, 270 OHM, 1/4W, 2%	
114	057-083	R36,115,126,181	RESISTOR, MF, 300 OHM, 1/4W, 2%	
115	057-084	R178	RESISTOR, MF, 330 OHM, 1/4W, 2%	
116	057-085	R1,58,96	RESISTOR, MF, 360 OHM, 1/4W, 2%	
117	057-087	R92,179	RESISTOR, MF, 430 OHM, 1/4W, 2%	
118	057-088	R50	RESISTOR, MF, 470 OHM, 1/4W, 2%	
119	057-090	R87	RESISTOR, MF, 560 OHM, 1/4W, 2% (PAL/SECAM)	
120	057-092	R13,52	RESISTOR, MF, 680 OHM, 1/4W, 2%	
121	057-093	R44,91,111,154,162	RESISTOR, MF, 750 OHM, 1/4W, 2%	
122	057-096	R65,95,130,155, 175	RESISTOR, MF, 1K, 1/4W, 2%	
123	057-097	R29,30,32,46, 113,116	RESISTOR, MF, 1.1K, 1/4W, 2%	
124	057-098	R9,105,168	RESISTOR, MF, 1.2K, 1/4W, 2%	
125	057-099	R43,110	RESISTOR, MF, 1.3K, 1/4W, 2%	
126	057-100	R170	RESISTOR, MF, 1.5K, 1/4W, 2%	
127	057-101	R89	RESISTOR, MF, 1.6K, 1/4W, 2%	
128	057-102	R23	RESISTOR, MF, 1.8K, 1/4W, 2%	
129	057-102	R195	RESISTOR, MF, 1.8K, 1/4W, 2% (NTSC/PAL-M)	
130	057-103	R54	RESISTOR, MF, 2K, 1/4W, 2%	
131	057-103	R87	RESISTOR, MF, 2K, 1/4W, 2% (NTSC/PAL-M)	
132	057-103	R195	RESISTOR, MF, 2K, 1/4W, 2% (PAL-SECAM)	
133	057-104	R15,20,24,35, 48,69,180,182	RESISTOR, MF, 2.2K, 1/4W, 2%	L

ASSEMBLY NO. 1374070 TITLE VIDEO OUTPUT PWA, BD NO. 25

ITEM NO.	AMPEX PART NO.	REFERENCE NUMBER	DESCRIPTION	JEDEC NO. OR MFR. PART NO.
134	057-105	R190	RESISTOR, MF, 2.4K, 1/4W, 2%	
135	057-106	R41,108	RESISTOR, MF, 2.7K, 1/4W, 2%	
136	057-107	R128	RESISTOR, MF, 3K, 1/4W, 2%	
137	057-108	R42,109	RESISTOR, MF, 3.3K, 1/4W, 2%	
138	057-109	R12,55	RESISTOR, MF, 3.6K, 1/4W, 2%	
139	057-110	R10	RESISTOR, MF, 3.9K, 1/4W, 2%	
140	057-112	R45,112,117,169	RESISTOR, MF, 4.7K, 1/4W, 2%	
141	057-113	R21	RESISTOR, MF, 5.1K, 1/4W, 2%	
142	057-114	R94,188	RESISTOR, MF, 5.6K, 1/4W, 2%	
143	057-115	R153,161	RESISTOR, MF, 6.2K, 1/4W, 2%	
144	057-118	R86	RESISTOR, MF, 8.2K, 1/4W, 2% (NTSC/PAL-M)	
145	057-118	R84	RESISTOR, MF, 8.2K, 1/4W, 2% (PAL/SECAM)	
146	057-120	R90,133,134	RESISTOR, MF, 10K, 1/4W, 2%	
147	057-127	R93	RESISTOR, MF, 20K, 1/4W, 2%	
148	057-127	R86	RESISTOR, MF, 20K, 1/4W, 2% (PAL/SECAM)	
149	057-127	R84	RESISTOR, MF, 20K, 1/4W, 2% (NTSC/PAL-M)	
150	057-129	R17,72,167	RESISTOR, MF, 24K, 1/4W, 2%	
151	057-872	R33,34	RESISTOR, MF, 562 OHM, 1/8W, 1%	
154	062-599	R123	RESISTOR, MF, 1.3K, 1/8W, 1%	
155	062-626	R192	RESISTOR, MF, 1.4K, 1/8W, 1%	
156	062-640	R131	RESISTOR, MF, 3.09K, 1/8W, 1%	
157	062-643	R151,152,159,160	RESISTOR, MF, 2K, 1/8W, 1%	
158	062-694	R187	RESISTOR, MF, 15K, 1/8W, 1%	
159	062-847	R26	RESISTOR, MF, 100 OHM, 1/8W, 1%	
160	062-821	R26	RESISTOR, MF, 49.9 OHM, 1/8W, 1%	
161	062-828	R120,122	RESISTOR, MF, 63.4 OHM, 1/8W, 1%	
162	062-833	R163,193	RESISTOR, MF, 71.5 OHM, 1/8W, 1%	
163	062-836	R6,78,99,100, 138,171	RESISTOR, MF, 75 OHM, 1/8W, 1%	
164	062-862	R176,177	RESISTOR, MF, 143 OHM, 1/8W, 1%	
165	062-866	R62	RESISTOR, MF, 162 OHM, 1/8W, 1%	
166	062-880	R185,186	RESISTOR, MF, 249 OHM, 1/8W, 1%	
167	062-881	R2,59,97	RESISTOR, MF, 261 OHM, 1/8W, 1%	
168	062-883	R31	RESISTOR, MF, 287 OHM, 1/8W, 1%	
169	062-884	R61	RESISTOR, MF, 301 OHM, 1/8W, 1%	
170	062-894	R4,16,101,145, 147	RESISTOR, MF, 402 OHM, 1/8W, 1%	
171	062-904	R39,77,106,137	RESISTOR, MF, 511 OHM, 1/8W, 1%	
172	062-905	R14	RESISTOR, MF, 536 OHM, 1/8W, 1% (NTSC/PAL-M)	
173	062-906	R19	RESISTOR, MF, 549 OHM, 1/8W, 1%	
174	062-908	R22	RESISTOR, MF, 604 OHM, 1/8W, 1%	
175	062-922	R3,60,98	RESISTOR, MF, 909 OHM, 1/8W, 1%	
				L

ASSEMBLY NO. 1374070 TITLE VIDEO OUTPUT PWA, BD NO. 25

ITEM NO.	AMPEX PART NO.	REFERENCE NUMBER	DESCRIPTION	JEDEC NO. OR MFR. PART NO.
176	062-926	R129	RESISTOR, MF, 1.07K, 1/8W, 1% (PAL-M)	
177	062-931	R121	RESISTOR, MF, 1.33K, 1/8W, 1%	
178	062-935	R25,27	RESISTOR, MF, 1.65K, 1/8W, 1%	
179	062-940	R118	RESISTOR, MF, 2.1K, 1/8W, 1%	
180	062-941	R40,75,107,135	RESISTOR, MF, 2.21K, 1/8W, 1%	
181	062-945	R158	RESISTOR, MF, 2.43K, 1/8W, 1%	
182	062-951	R5,81,102,141, 173	RESISTOR, MF, 2.8K, 1/8W, 1%	
183	062-964	R165,189	RESISTOR, MF, 4.53K, 1/8W, 1%	
184	062-968	R194	RESISTOR, MF, 4.99K, 1/8W, 1%	
185	062-969	R124,125	RESISTOR, MF, 5.11K, 1/8W, 1%	
186	062-980	R150,191	RESISTOR, MF, 8.06K, 1/8W, 1%	
189	066-062	R76,136	RESISTOR, MF, 3.65K, 1/8W, 1%	
190	066-170	R63	RESISTOR, MF, 280 OHM, 1/8W, 1%	
191	066-180	R14	RESISTOR, MF, 665 OHM, 1/8W, 1% (PAL/SECAM)	
192	066-386	R157	RESISTOR, MF, 6.65K, 1/8W, 1%	
193	066-706	R129	RESISTOR, MF, 1.02K, 1/8W, 1% (NTSC)	
194	066-791	R164	RESISTOR, MF, 1.37K, 1/8W, 1%	
196	143-981		JACK, TEST, REF: J1-3	
197	226-035	L1,2,3,10,13,14, 15,16,17,18,19	CORE, SIX APERTURE	
198	302-395		STRAP, CABLE	
199	280-130		SPACER, XSTR, T0-18, REF: Q1-11, 13-15, 17-39	
202	540-025	L12	INDUCTOR, FXD, 56 UH, 5%	
203	540-029	L11	INDUCTOR, FXD, 150 UH, 5%	
205	541-071	L4	INDUCTOR, VAR, 47 UH, 20%	
207	586-203	A8	INTEGRATED CIRCUIT	CA3028B
208	586-268	A2	INTEGRATED CIRCUIT	U6E7741393
209	586-316	A4,11	INTEGRATED CIRCUIT	CA3039
210	586-447	A1,3,10	INTEGRATED CIRCUIT	CA3026
211	586-533	A5,7	INTEGRATED CIRCUIT	SN74121N
212	586-688	A6	INTEGRATED CIRCUIT	SN74H04N
213	586-778	A9	INTEGRATED CIRCUIT	CA3054
215	602-012		PLUG, SHORTING, REF: J1-3	
221	932-034		BEAD, FERRITE, 0.250 LG	
222	932-035		BEAD, FERRITE, 0.125 LG	

L

SHEET 5 OF 5

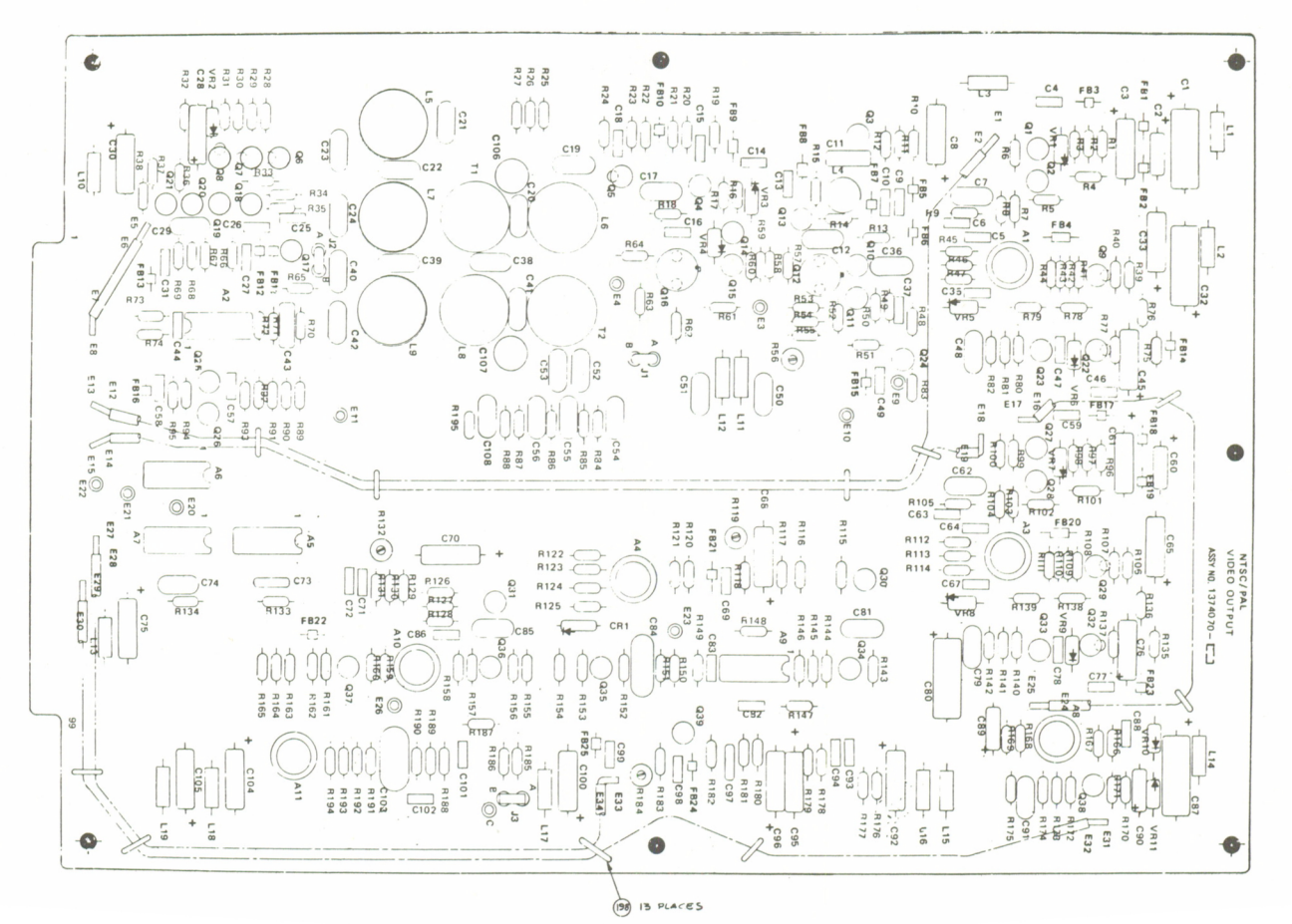

Assembly No. 1374070. Video Output PWA, Board No. 25

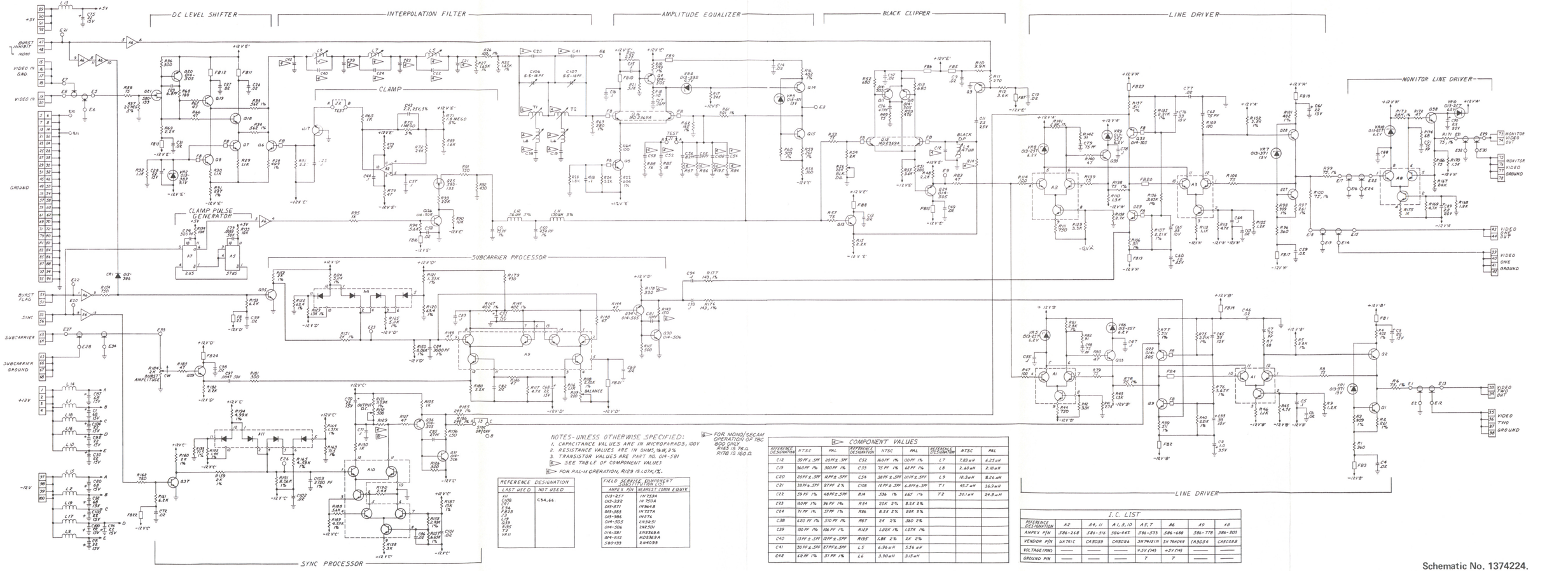

NOTES-UNLESS OTHERWISE SPECIFIED:
1. CAPACITANCE VALUES ARE IN MICROFARADS, 100V
2. RESISTANCE VALUES ARE IN OHMS, 1/4W, 2%
3. TRANSISTOR VALUES ARE PART NO. 014-581

▷ SEE TABLE OF COMPONENT VALUES

▷ FOR PAL-M OPERATION, R129 IS 1.07K, 1%.

▷ FOR MONO/SECAM OPERATION OF TBC 900 ONLY R145 IS 76.8, R178 IS 160.12.

REFERENCE DESIGNATION	
LAST USED	NOT USED
A11	C54, 66
C108	
CR1	
E34	
FB15	
L19	
Q39	
R155	
T2	
VR11	

FIELD SERVICE COMPONENT SELECTION FOR Q39	
AMPEX P/N	NEAREST COMM EQUIV.
013-257	1N753A
013-332	1N 755A
013-371	1N3648
013-383	1N757A
013-386	1N276
014-505	2N3251
014-506	2N2501
014-581	2N2369A
014-652	MJ2369A
580-133	2N4093

▷ COMPONENT VALUES

REFERENCE DESIGNATION	NTSC	PAL	REFERENCE DESIGNATION	NTSC	PAL	REFERENCE DESIGNATION	NTSC	PAL
C12	39 PF ± .5PF	20PF ± .5PF	C52	16.0 PF 1%	130 PF 1%	L7	7.83 uH	6.25 uH
C19	360 PF 1%	300 PF 1%	C53	75 PF 1%	62 PF 1%	L8	2.60 uH	2.10 uH
C20	20PF ± .5PF	12PF ± .5PF	C54	38PF ± .5PF	20PF ± .5PF	L9	10.3 uH	8.26 uH
C21	33PF ± .5PF	27PF 2%	C108	12PF ± .5PF	6.8PF ± .5PF	T1	45.7 uH	36.9 uH
C22	39 PF 1%	48PF ± .5PF	R14	536 1%	681 1%	T2	30.1 uH	24.3 uH
C23	180 PF 1%	96 PF 1%	R16	20K 2%	8.2K 2%			
C24	71 PF 1%	57PF 1%	R86	8.2K 2%	20K 2%			
C38	620 PF 1%	510 PF 1%	R87	2K 2%	360 2%			
C39	130 PF 1%	106 PF 1%	R129	1.02K 1%	1.07K 1%			
C40	13PF ± .5PF	12PF ± .5PF	R135	1.8K 2%	2K 2%			
C41	30 PF ± .5PF	27PF ± .5PF	L5	6.96 uH	5.56 uH			
C42	62 PF 1%	51 PF 1%	L6	3.90 uH	3.15 uH			

I.C. LIST

REFERENCE DESIGNATION	A2	A4, 11	A1, 3, 10	A5, 7	A6	A9	A8
AMPEX P/N	586-268	586-316	586-447	586-533	586-688	586-778	586-203
VENDOR P/N	UA741C	CA3039	CA3026	SN74121N	SN74H24N	CA3054	CA3028B
VOLTAGE (PIN)	—	—	—	+5V (14)	+5V (14)	—	—
GROUND PIN	—	—	—	7	7	—	—

Schematic No. 1374224.
Video Output PWA, Board No. 25

AMPEX 1809178-02

11-249/250

ITEM NO.	AMPEX PART NO.	REFERENCE NUMBER	DESCRIPTION	JEDEC NO. OR MFR. PART NO.
	1374174-03		VELOCITY COMPENSATOR NO. 1 MODULE ASSEMBLY, NTSC/PAL-M	
	1374174-04		VELOCITY COMPENSATOR NO. 1 MODULE ASSEMBLY, PAL/SECAM	
2	1373285-26		OVERLAY	
3	1373272-01		SHIELD, PWB	
5	1373227-01		CONTACT, GND	
6	471-325		SCREW, MACH, FLAT HD, NO. 4-40 X 0.188 LG	
7	473-325		SCREW, MACH, PAN HD, XREC, NO. 4-40 X 0.312 LG	
8	496-004		NUT, KEP, NO. 4	
9	501-169		WASHER, PLAIN, NO. 4	
10	058-459	R200	RESISTOR, VAR, 5K	
11	6000001-20		KNOB	
12	119-258	S1	SWITCH, DPDT	
13	119-259	S2,3	SWITCH, SPDT	
16	250-188		BUMPER, PAD	
17	1374244-03		VELOCITY COMPENSATOR NO. 1 PWA (NTSC/PAL-M)	
18	1374244-04		VELOCITY COMPENSATOR NO. 1 PWA (PAL/SECAM)	
19	1373273-13		HANDLE, MODULE	
				C

SHEET 1 OF 1

ITEM NO.	AMPEX PART NO.	REFERENCE NUMBER	DESCRIPTION	JEDEC NO. OR MFR. PART NO.
	1374244-03		VELOCITY COMPENSATOR NO. 1 PWA, BD NO. 26, NTSC/PAL-M	
	1374244-04		VELOCITY COMPENSATOR NO. 1 PWA, BD NO. 26, PAL/SECAM	
3	1374246		SCHEMATIC	
6	013-166	VR5,8	DIODE, ZENER	1N746A
7	013-257	VR3,4,7	DIODE, ZENER	1N753A
9	013-599	CR1-17	DIODE, SWITCHING	1N914
11	013-829	VR2	DIODE, ZENER	1N5228B
12	013-983	VR1,6	DIODE, ZENER	1N752A
15	014-383	Q22	TRANSISTOR	2N2484
16	014-505	Q2,4,5,8,11,14,16, 17,19,26,29,33,35, 37,41,43,44,47, 49,51	TRANSISTOR	2N3251
17	014-506	Q6,9,13,23,32,48	TRANSISTOR	2N2501
18	014-581	Q1,3,12,18,21,25, 28,30,36,38,40, 46,50	TRANSISTOR	2N2369A
20	014-600	Q7,10,15,20,31,42	TRANSISTOR, BILATERAL	2N3912
21	580-133	Q24,27,34,39,45	TRANSISTOR, FET	2N4093
23	030-056	C6,8,12,17-19,21, 23,29-31,33,39,40, 45,46,49-52,57,58, 60,70,72,74,78,80, 81,84,85,88,90,92, 94	CAPACITOR, CERAMIC, 0.02 UF, 100V	
25	030-223	C1	CAPACITOR, CERAMIC, 2.2 UF, 25V	
27	034-177	C24,27,37,66	CAPACITOR, MICA, 100 PF, 500V, 5%	
28	034-185	C41,63	CAPACITOR, MICA, 75 PF, 500V, 5%	
29	034-199	C62	CAPACITOR, MICA, 300 PF, 500V, 5%	
30	034-219	C83	CAPACITOR, MICA, 120 PF, 500V, 1% (PAL/SECAM)	
31	034-286	C9,83,98	CAPACITOR, MICA, 200 PF, 500V, 5% (NTSC/PAL-M)	
32	034-286	C9,98	CAPACITOR, MICA, 200 PF, 500V, 5% (PAL/SECAM)	
33	034-347	C54,69	CAPACITOR, MICA, 180 PF, 500V, 5%	
34	034-539	C34	CAPACITOR, MICA, 43 PF, 500V, 2%	
35	034-941	C73,91	CAPACITOR, MICA, 51 PF, 500V, 5% (NTSC/PAL-M)	
36	034-941	C91	CAPACITOR, MICA, 51 PF, 500V, 5% (PAL/SECAM)	
37	034-962	C73	CAPACITOR, MICA, 33 PF, 500V, 5% (PAL/SECAM)	
38	035-598	C76	CAPACITOR, MYLAR, 0.047 UF, 50V, 5%	
40	037-367	C2,3,10,16,20,22, 26,32,42,44,47, 53,59,67,68,77	CAPACITOR, TANT, 2.2 UF, 20V	
42	037-745	C11	CAPACITOR, TANT, 47 UF, 6V	
43	037-991	C56,96,99,100	CAPACITOR, TANT, 22 UF, 15V	
47	055-131	C93	CAPACITOR, MYLAR, 0.039 UF, 50V	
				B

ASSEMBLY NO. 1374244 TITLE VELOCITY COMPENSATOR NO. 1 PWA, BD NO. 26

ITEM NO.	AMPEX PART NO.	REFERENCE NUMBER	DESCRIPTION	JEDEC NO. OR MFR. PART NO.
48	055-133	C48,79,87,89	CAPACITOR, MYLAR, 0.0022 UF, 50V	
49	055-166	C13,15,75,82,95	CAPACITOR, MYLAR, 0.001 UF, 50V	
51	055-234	C43,71	CAPACITOR, POLY, 1 UF, 200V	
52	055-582	C25,28,38	CAPACITOR, POLY, 0.1 UF, 200V	
53	055-886	C61	CAPACITOR, POLY, 0.01 UF, 200V	
55	056-164	C4,5,7,14,35,36,65	CAPACITOR, MICA, 22 PF, 500V, ±0.5 PF	
56	056-291	C55,64,86,97	CAPACITOR, MICA, 470 PF, 500V, 1%	
59	044-927	R101	RESISTOR, VAR, 500 OHM	
60	044-944	R158,169	RESISTOR, VAR, 5K	
62	057-064	R22,25,31,36, 43,45,46,52,53, 61,83,85,87,90, 96,102,110,122, 123,133,148, 165,176	RESISTOR, MF, 47 OHM, 1/4W, 2%	
63	057-069	R168	RESISTOR, MF, 75 OHM, 1/4W, 2%	
64	057-072	R21,24,26,48,65 66,82,127,136, 161	RESISTOR, MF, 100 OHM, 1/4W, 2%	
65	057-075	R88,89	RESISTOR, MF, 130 OHM, 1/4W, 2%	
66	057-078	R58	RESISTOR, MF, 180 OHM, 1/4W, 2%	
67	057-085	R2,6,28,41,55, 109,131	RESISTOR, MF, 360 OHM, 1/4W, 2%	
68	057-088	R73	RESISTOR, MF, 470 OHM, 1/4W, 2%	
69	057-091	R1,5,49,56,70, 107,108,114, 117,132,141, 142,173	RESISTOR, MF, 620 OHM, 1/4W, 2%	
70	057-092	R17,18	RESISTOR, MF, 680 OHM, 1/4W, 2%	
71	057-093	R16,19	RESISTOR, MF, 750 OHM, 1/4W, 2%	
72	057-096	R35,38,63,69, 86,121,156, 175,177	RESISTOR, MF, 1K, 1/4W, 2%	
73	057-097	R95,128,129, 143,144,145	RESISTOR, MF, 1.1K, 1/4W, 2%	
74	057-099	R12,59	RESISTOR, MF, 1.3K, 1/4W, 2%	
76	057-100	R159,172	RESISTOR, MF, 1.5K, 1/4W, 2%	
77	057-101	R153,170	RESISTOR, MF, 1.6K, 1/4W, 2%	
78	057-102	R84	RESISTOR, MF, 1.8K, 1/4W, 2%	
80	057-103	R10,20,23,34, 39,51,62,77,81, 97,103,111,119, 120,126	RESISTOR, MF, 2K, 1/4W, 2%	
81	057-107	R167	RESISTOR, MF, 3K, 1/4W, 2%	
82	057-111	R4,8,47,54,130, 146,160	RESISTOR, MF, 4.3K, 1/4W, 2%	
83	057-112	R27,106,139,140	RESISTOR, MF, 4.7K, 1/4W, 2%	
84	057-113	R71,72,94,135	RESISTOR, MF, 5.1K, 1/4W, 2%	
				B

ITEM NO.	AMPEX PART NO.	REFERENCE NUMBER	DESCRIPTION	JEDEC NO. OR MFR. PART NO.
85	057-116	R166	RESISTOR, MF, 6.8K, 1/4W, 2%	
86	057-117	R99	RESISTOR, MF, 7.5K, 1/4W, 2%	
87	057-120	R3,7,29,30,50,57, 91,92,100,118, 125,150,151	RESISTOR, MF, 10K, 1/4W, 2%	
88	057-122	R171	RESISTOR, MF, 12K, 1/4W, 2%	
89	057-125	R33,37,67	RESISTOR, MF, 16K, 1/4W, 2%	
90	057-126	R163,164	RESISTOR, MF, 18K, 1/4W, 2%	
91	057-127	R105,137,138,155	RESISTOR, MF, 20K, 1/4W, 2%	
92	057-129	R80,134,147,162	RESISTOR, MF, 24K, 1/4W, 2%	
93	057-130	R154,174	RESISTOR, MF, 27K, 1/4W, 2%	
94	057-134	R157	RESISTOR, MF, 39K, 1/4W, 2%	
95	057-137	R40,64	RESISTOR, MF, 51K, 1/4W, 2%	
96	057-144	R9,98,112,113,116	RESISTOR, MF, 100K, 1/4W, 2%	
98	058-001	R32,104,115,124, 149	RESISTOR, VAR, 50K	
99	058-004	R75	RESISTOR, VAR, 1K	
100	058-540	R152	RESISTOR, VAR, 5K, MULTI TURN	
103	062-624	R93	RESISTOR, MF, 1.00K, 1/8W, 1%	
104	062-849	R13	RESISTOR, MF, 107 OHM, 1/8W, 1%	
105	062-884	R79	RESISTOR, MF, 301 OHM, 1/8W, 1%	
106	062-916	R78	RESISTOR, MF, 750 OHM, 1/8W, 1%	
107	062-926	R44,68	RESISTOR, MF, 1.07K, 1/8W, 1%	
108	062-934	R11,14	RESISTOR, MF, 1.62K, 1/8W, 1%	
109	062-968	R74	RESISTOR, MF, 4.99K, 1/8W, 1%	
111	066-513	R15,60	RESISTOR, MF, 8.66K, 1/8W, 1%	
112	066-602	R76	RESISTOR, MF, 6.98K, 1/8W, 1%	
113	066-791	R42	RESISTOR, MF, 1.37K, 1/8W, 1%	
116	143-981	J1,A-B-C	JACK, CLOSED ENTRY	
119	226-035	L2-4	CORE, SIX APERTURE	
123	280-130		SPACER, XSTR, T0-18, REF: Q7,10,15,20,24,27,31,34,39,42,45,49-51	
126	541-068	L1	INDUCTOR, VAR, 10 UH	
128	586-167	A33	INTEGRATED CIRCUIT	SN74H10N
129	586-168	A19,23,27,29,31, 34,35,38,39,48,53	INTEGRATED CIRCUIT	SN74H00N
131	586-261	A5,6,7,15,16,17	INTEGRATED CIRCUIT	LM302H
132	586-268	A1,2,8,12,13	INTEGRATED CIRCUIT	741C
133	586-276	A11	INTEGRATED CIRCUIT	CA3046
134	586-443	A3,4,9,10,14,18,20	INTEGRATED CIRCUIT	715C
136	586-533	A21,25,26,32,37, 41,42,44,47,49,51	INTEGRATED CIRCUIT	SN74121N
138	586-688	A22,45,50,52	INTEGRATED CIRCUIT	SN74H04N
139	586-700	A24,28,30,36,40, 43,46,54,55	INTEGRATED CIRCUIT	SN74H74N
142	602-012	J1	PLUG, SHORTING	
146	616-569		CABLE, COAX, 75 OHM	
150	932-034		BEAD, FERRITE, 0.250 LG	
151	932-035		BEAD, FERRITE, 0.125 LG	

B

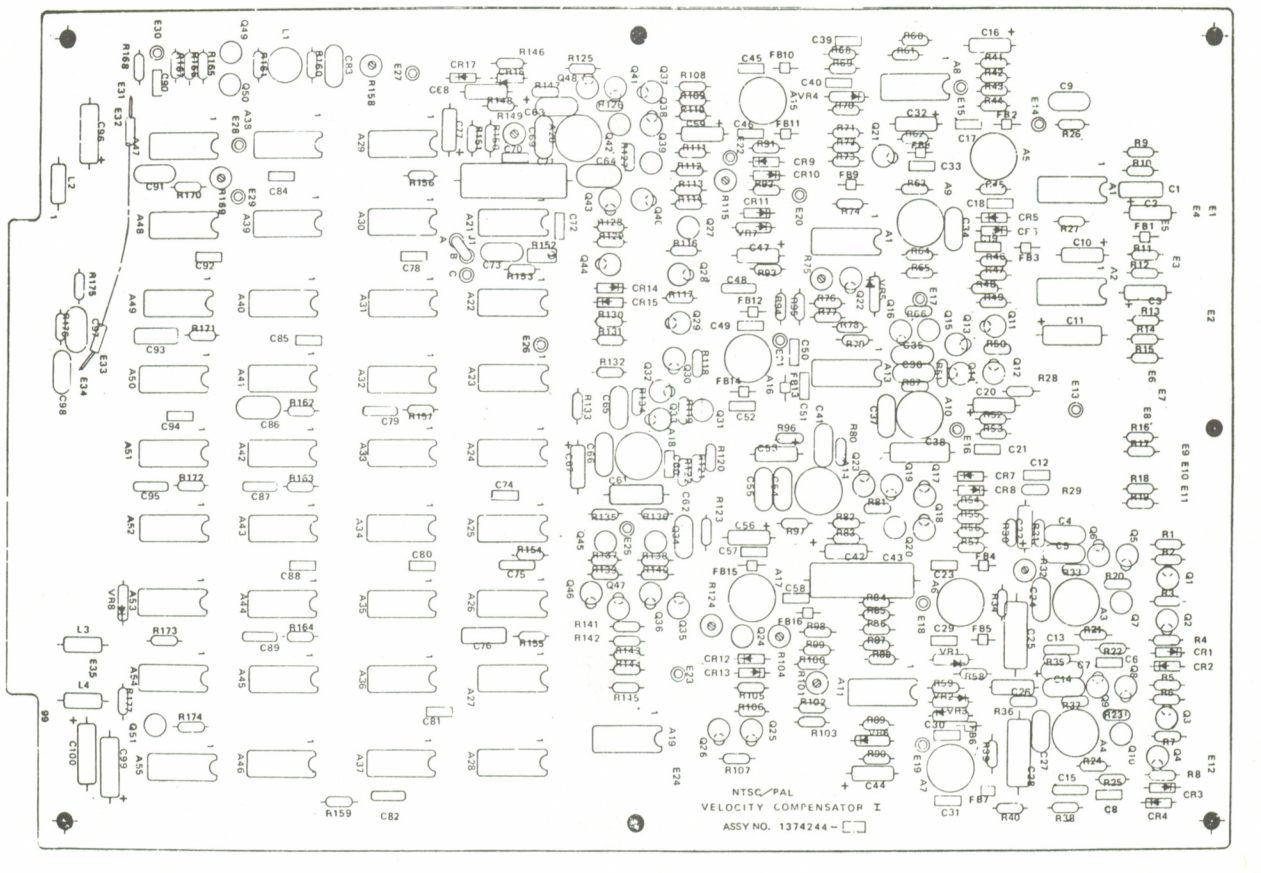

Assembly No. 1374244. Velocity Compensator No. 1 PWA, Board No. 26

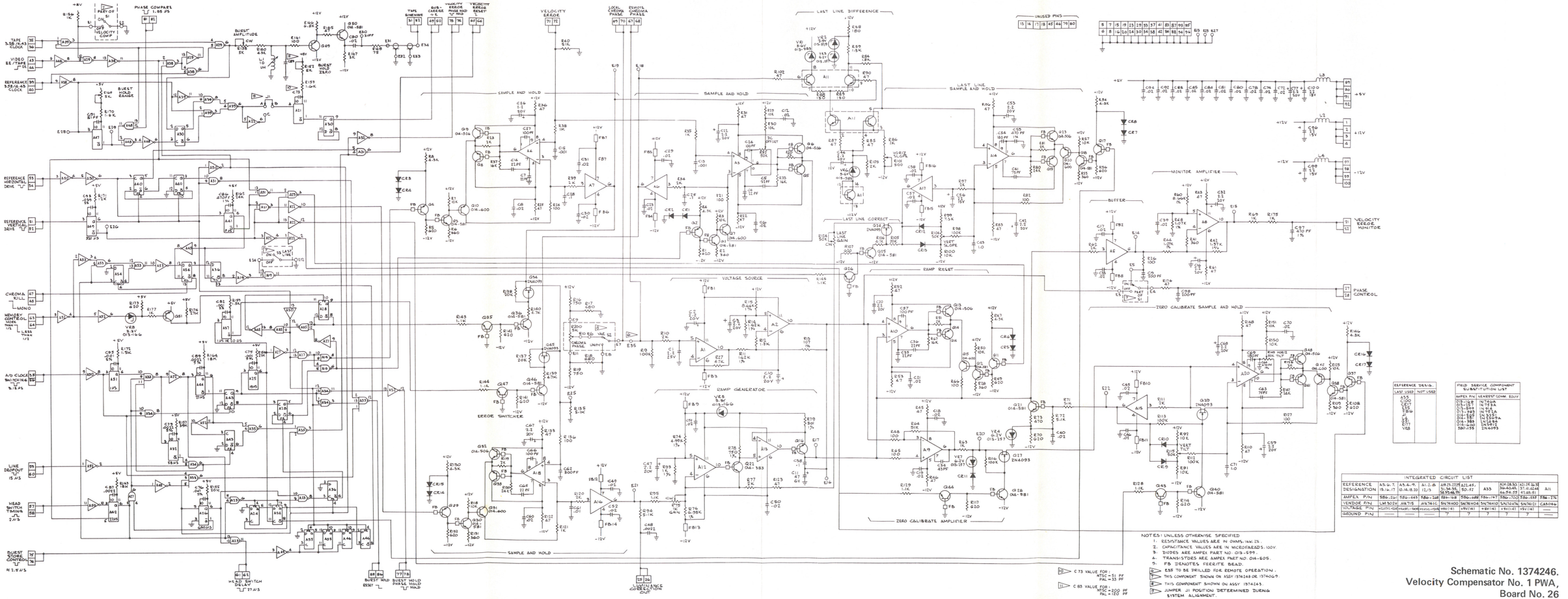

Schematic No. 1374246.
Velocity Compensator No. 1 PWA,
Board No. 26

ITEM NO.	AMPEX PART NO.	REFERENCE NUMBER	DESCRIPTION	JEDEC NO. OR MFR. PART NO.
	1374175-01		VELOCITY COMPENSATOR NO. 2 MODULE ASSEMBLY, NTSC/PAL-M	
	1374175-02		VELOCITY COMPENSATOR NO. 2 MODULE ASSEMBLY, PAL/SECAM	
1	1374082-03		VELOCITY COMPENSATOR NO. 2 PWA (NTSC/PAL-M)	
2	1373285-27		OVERLAY	
3	1373272-01		SHIELD, PWB	
4	1373273-13		HANDLE, MODULE	
5	1373227-01		CONTACT, GND	
6	471-325		SCREW, MACH, FLAT HD, NO. 4–40 X 0.188 LG	
7	473-325		SCREW, MACH, PAN HD, XREC, NO. 4–40 X 0.312 LG	
8	496-004		NUT, KEP, NO. 4	
9	501-169		WASHER, PLAIN, NO. 4	
10	1374082-04		VELOCITY COMPENSATOR NO. 2 PWA (PAL/SECAM)	
11	250-188		BUMPER, PAD	
				D

SHEET 1 OF 1

ITEM NO.	AMPEX PART NO.	REFERENCE NUMBER	DESCRIPTION	JEDEC NO. OR MFR. PART NO.
	1374082-03		VELOCITY COMPENSATOR NO. 2 PWA, BD NO. 27, NTSC/PAL-M	
	1374082-04		VELOCITY COMPENSATOR NO. 2 PWA, BD NO. 27, PAL/SECAM	
3	1374084		SCHEMATIC	
6	013-166	VR6,7	DIODE, ZENER	1N746A
7	013-172	VR13	DIODE, ZENER	1N749A
8	013-224	VR1,3,12	DIODE, ZENER	1N754A
9	013-257	VR4,5,9,10,15, 17-19,21	DIODE, ZENER	1N753A
10	013-599	CR7,8	DIODE	1N914
11	013-883	CR3,4,15,16	DIODE	HP5082-2900
12	013-972	CR1,2,5,6,9-14	DIODE	FD1004
13	013-983	VR2,8,11,14,16,20	DIODE, ZENER	1N752A
16	014-505	Q11,14,18,21,25, 28,39,42,47,50,53, 57,60,79,84,71	TRANSISTOR	2N3251
17	014-581	Q1-10,12,13,15,19, 20,22-24,26,27, 29-38,41,43-46,48, 51,52,54-56,58,59, 61-70,73-78,80-83, 85	TRANSISTOR	2N2369A
18	014-600	Q17,40,72	TRANSISTOR	2N3912
19	580-133	Q16,49	TRANSISTOR	2N4093
23	030-963	C27,29,80,82,115, 130,140,142,152	CAPACITOR, CER, 0.1 MFD, 100V	
26	034-177	C21,35,41	CAPACITOR, MICA, 100 PF, 500V, 5% (NTSC/PAL-M)	
27	034-219	C10,25,94,99,170	CAPACITOR, MICA, 120 PF, 500V, 1% (NTSC/PAL-M)	
28	034-219	C10,26,40,42,94, 96,101,157,160, 170	CAPACITOR, MICA, 120 PF, 500V, 1% (PAL/SECAM)	
29	034-220	C75,76,135,136	CAPACITOR, MICA, 150 PF, 500V, 1% (PAL/SECAM)	
30	034-253	C45,165	CAPACITOR, MICA, 330 PF, 500V, 1% (NTSC/PAL-M)	
31	034-253	C45,89,165	CAPACITOR, MICA, 330 PF, 500V, 1% (PAL/SECAM)	
32	034-259	C38	CAPACITOR, MICA, 56 PF, 500V, 1% (NTSC/PAL-M)	
33	034-259	C24,100	CAPACITOR, MICA, 56 PF, 500V, 1% (PAL/SECAM)	
34	034-283	C53	CAPACITOR, MICA, 820 PF, 300V, 5%	
35	034-285	C33,46,51,122, 155,166	CAPACITOR, MICA, 75 PF, 500V, 1% (NTSC/PAL-M)	
36	034-285	C25,33,51,99, 122,155	CAPACITOR, MICA, 75 PF, 500V, 1% (PAL/SECAM)	
37	034-286	C26,40,42,96,101, 157,160,171	CAPACITOR, MICA, 200 PF, 500V, 5% (NTSC/PAL-M)	
38	034-286	C171	CAPACITOR, MICA, 200 PF, 500V, 5% (PAL/SECAM)	
39	034-287	C67,69,105,123, 125,147,148	CAPACITOR, MICA, 300 PF, 500V, 1%	
40	034-297	C75,76,135,136	CAPACITOR, MICA, 180 PF, 500V, 1% (NTSC/PAL-M)	
41	034-539	C92	CAPACITOR, MICA, 43 PF, 500V, 2%	
				N

ASSEMBLY NO. 1374082 TITLE VELOCITY COMPENSATOR NO. 2 PWA, BD NO. 27

ITEM NO.	AMPEX PART NO.	REFERENCE NUMBER	DESCRIPTION	JEDEC NO. OR MFR. PART NO.
42	034-541	C21,35,41	CAPACITOR, MICA, 62 PF, 500V, 1% (PAL/SECAM)	
43	034-571	C37,39,103	CAPACITOR, MICA, 36 PF, 500V, 2% (NTSC/PAL-M)	
44	034-571	C38,103,108	CAPACITOR, MICA, 36 PF, 500V, 2% (PAL/SECAM)	
45	034-888	C84,89,149	CAPACITOR, MICA, 430 PF, 500V, 5% (NTSC/PAL-M)	
46	034-888	C84,149	CAPACITOR, MICA, 430 PF, 500V, 5% (PAL/SECAM)	
47	034-940	C24,100	CAPACITOR, MICA, 82 PF, 500V, 5% (NTSC/PAL-M)	
48	034-941	C13,108	CAPACITOR, MICA, 51 PF' 500V, 5% (NTSC/PAL-M)	
49	034-250	C52,85	CAPACITOR, MICA, 620 PF, 300V, 1%	
50	035-814	C66,120	CAPACITOR, MYLAR,0.033 MFD, 50V, 5%	
52	037-367	C6,12,59,61,63, 68,71,73,78,93, 97,107,110,112, 114,117,124,128, 131,138,150,158, 162	CAPACITOR, TANT, 2.2 MFD, 20V	
53	037-745	C145	CAPACITOR, TANT, 47 MFD, 6V	
54	037-991	C14,15,119,161	CAPACITOR, TANT, 22 MFD, 15V	
55	044-741	R86	RESISTOR, VAR, 20K (PAL/SECAM)	
56	044-767	R86	RESISTOR, VAR, 5K, FRONT ADJ, MULTI TURN (NTSC/PAL-M)	
57	044-927	R229	RESISTOR, VAR, 500 OHM	
58	044-943	R41,173,180,326	RESISTOR, VAR, 2K	
59	044-944	R31,184	RESISTOR, VAR, 5K	
61	055-166	C9	CAPACITOR, MYLAR, 0.001 MFD, 50V, 5%	
62	055-167	C106	CAPACITOR, MYLAR, 0.0033 MFD, 50V, 5%	
64	056-164	C37,39	CAPACITOR, MICA, 22 PF, 500V, ±0.5 PF (PAL/SECAM)	
65	056-163	C23	CAPACITOR, MICA, 470 PF, 500V, 5%	
66	056-488	C60,64,79,113, 118,139,146	CAPACITOR, MICA, 10 PF, 500V, ±0.5 PF (NTSC/PAL-M)	
67	056-488	C13,60,64,79, 113,118,139,146	CAPACITOR, MICA, 10 PF, 500V, ±0.5 PF (PAL/SECAM)	
69	057-056	R20	RESISTOR, MF, 22 OHM, 1/4W, 2%	
70	057-064	R2,9,10,13,19,23, 35,46,59,79,82, 89,92,106,113, 117,124,129,141, 144,149,154,156, 171,172,181,182,192, 200,209,217,222, 226,228,231,237, 249,252,257,262, 265,278,282,288, 295,296,303,314, 318	RESISTOR, MF, 47 OHM, 1/4W, 2%	N

SHEET 2 OF 5

ITEM NO.	AMPEX PART NO.	REFERENCE NUMBER	DESCRIPTION	JEDEC NO. OR MFR. PART NO.
71	057-069	R29,68,191,219, 305,306	RESISTOR, MF, 75 OHM, 1/4W, 2%	
72	057-070	R114,131,136, 157,218,239,243, 264	RESISTOR, MF, 82 OHM, 1/4W, 2%	
73	057-072	R53,72,188,275, 294,301,329,330	RESISTOR, MF, 100 OHM, 1/4W, 2%	
74	057-078	R145,148,253,256	RESISTOR, MF, 180 OHM, 1/4W, 2%	
75	057-079	R39,102,104,112, 116,132,139,143, 150,153,158,159, 205,207,215,221, 240,247,251,258, 261,266,267	RESISTOR, MF, 200 OHM, 1/4W, 2%	
76	057-082	R66	RESISTOR, MF, 270 OHM, 1/4W, 2%	
77	057-083	R133,161,241	RESISTOR, MF, 300 OHM, 1/4W, 2%	
78	057-084	R98,103,115,152, 206,220,260	RESISTOR, MF, 330 OHM, 1/4W, 2%	
79	057-088	R7,8,70,174,183, 186,189,297,300	RESISTOR, MF, 470 OHM, 1/4W, 2%	
80	057-089	R26,62,67	RESISTOR, MF' 510 OHM, 1/4W, 2%	
81	057-091	R97,118,140,196, 223,248,273	RESISTOR, MF, 620 OHM, 1/4W, 2%	
82	057-092	R50,291	RESISTOR, MF, 680 OHM, 1/4W, 2%	
83	057-093	R164,170,328	RESISTOR, MF, 750 OHM, 1/4W, 2%	
84	057-094	R175,201	RESISTOR, MF, 820 OHM, 1/4W, 2%	
85	057-096	R1,65,81,93,111, 119,122,202,214, 225,270,272,316	RESISTOR, MF, 1K, 1/4W, 2%	
86	057-097	R21,69,105,155, 160,162,208,216, 263,268,269,304	RESISTOR, MF, 1.1K, 1/4W, 2%	
87	057-100	R12,71,107,190, 197,210,227	RESISTOR, MF, 1.5K, 1/4W, 2%	
88	057-101	R18,22,73,187, 203	RESISTOR, MF, 1.6K, 1/4W, 2%	
89	057-102	R123,125,169,230 232	RESISTOR, MF, 1.8K, 1/4W, 2%	
90	057-103	R28,30,45,64,120, 121,163,178,185, 198,224,286	RESISTOR, MF, 2K, 1/4W, 2%	
91	057-104	R138,246	RESISTOR, MF, 2.2K, 1/4W, 2%	
92	057-106	R142,146,147,177, 250,254,255	RESISTOR, MF, 2.7K, 1/4W, 2%	
93	057-107	R3,6,14,17,27,63, 109,110,126,127, 212,213,233,234, 302	RESISTOR, MF, 3K, 1/4W, 2%	
94	057-108	R165,176	RESISTOR, MF, 3.3K, 1/4W, 2%	
95	057-109	R271	RESISTOR, MF, 3.6K, 1/4W, 2%	
				N

ITEM NO.	AMPEX PART NO.	REFERENCE NUMBER	DESCRIPTION	JEDEC NO. OR MFR. PART NO.
96	057-110	R11,44,48,84,90, 179,285,287,325	RESISTOR, MF, 3.9K, 1/4W, 2%	
97	057-111	R96	RESISTOR, MF, 4.3K, 1/4W, 2%	
98	057-113	R274	RESISTOR, MF, 5.1K, 1/4W, 2%	
99	057-115	R195,166,276	RESISTOR, MF, 6.2K, 1/4W, 2%	
100	057-120	R95,101,151,204, 259,298,327	RESISTOR, MF, 10K, 1/4W, 2%	
101	057-127	R40,88,193	RESISTOR, MF, 20K, 1/4W, 2%	
102	057-144	R58,87,194	RESISTOR, MF, 100K, 1/4W, 2%	
104	058-001	R91,199,299	RESISTOR, VAR, 50K	
105	058-004	R168	RESISTOR, VAR, 1K	
106	058-540	R236	RESISTOR, VAR, 5K, TOP ADJ, MULTI TURN	
109	062-643	R55,76,311,322	RESISTOR, MF, 2K, 1/8W, 1%	
110	062-876	R32,308	RESISTOR, MF, 215 OHM, 1/8W, 1%	
111	062-884	R4,5,15,16	RESISTOR, MF, 301 OHM, 1/8W, 1%	
112	062-891	R108,211	RESISTOR, MF, 374 OHM, 1/8W, 1%	
113	062-893	R24,25,60,61	RESISTOR, MF, 392 OHM, 1/8W, 1%	
114	062-894	R43,284	RESISTOR, MF, 402 OHM, 1/8W, 1%	
115	062-902	R49,290	RESISTOR, MF, 499 OHM, 1/8W, 1%	
116	062-905	R75,310	RESISTOR, MF, 536 OHM, 1/8W, 1%	
117	062-908	R100,130,134,135, 137,238,242,244, 245	RESISTOR, MF, 604 OHM, 1/8W, 1%	
118	062-913	R51,292	RESISTOR, MF, 681 OHM, 1/8W, 1%	
119	062-923	R85,320	RESISTOR, MF, 931 OHM, 1/8W, 1%	
120	062-925	R52,293	RESISTOR, MF, 1.05K, 1/8W, 1%	
121	062-926	R47,78,289,313	RESISTOR, MF, 1.07K, 1/8W, 1%	
122	062-934	R38,281	RESISTOR, MF, 1.62K, 1/8W, 1%	
124	062-942	R34,277	RESISTOR, MF, 2.26K, 1/8W, 1%	
125	062-958	R57,324	RESISTOR, MF, 3.74K, 1/8W, 1%	
126	062-961	R56,77,312,319, 323	RESISTOR, MF, 3.92K, 1/8W, 1%	
127	062-967	R83,317	RESISTOR, MF, 4.87K, 1/8W, 1%	
128	062-981	R99	RESISTOR, MF, 8.45K, 1/8W, 1%	
130	066-063	R33,309	RESISTOR, MF, 2.61K, 1/8W, 1%	
131	066-170	R42,80,283,315	RESISTOR, MF, 280 OHM, 1/8W, 1%	
132	066-172	R94,167	RESISTOR, MF, 845 OHM, 1/8W, 1%	
133	066-174	R128,235	RESISTOR, MF, 806 OHM, 1/8W, 1%	
134	066-193	R54,321	RESISTOR, MF, 2.15K, 1/8W, 1%	
135	066-194	R36,37,279,280	RESISTOR, MF, 324 OHM, 1/8W, 1%	
136	066-751	R74,307	RESISTOR, MF, 1.13K, 1/8W, 1%	
137	143-981		JACK, PC	
139	226-035	L3,4,23,27	CORE, SIX APERTURE	
140	280-130		SPACER, XSTR, T0-18	
				N

ASSEMBLY NO. 1374082 TITLE VELOCITY COMPENSATOR NO. 2 PWA, BD NO. 27

ITEM NO.	AMPEX PART NO.	REFERENCE NUMBER	DESCRIPTION	JEDEC NO. OR MFR. PART NO.
141	302-395		STRAP, CABLE	
143	540-057	L14,21,26	INDUCTOR, FXD, 10 UH, 5%	
144	540-073	L5,17,22,25	INDUCTOR, FXD, 390 UH	
145	541-068	L6,8,11,12,18,20, 24	INDUCTOR, VAR, 10 UH, 20%	
146	051-958	L7,19	INDUCTOR, VAR, 68 UH	
147	541-080	L9,10,13,15,16	INDUCTOR, VAR, 2.2 UH, 20%	
150	586-124	A11,14,20	INTEGRATED CIRCUIT	UA710C
151	586-168	A1,2	INTEGRATED CIRCUIT	SN74H00
152	586-261	A12,21	INTEGRATED CIRCUIT	LM302H
153	586-443	A10,17	INTEGRATED CIRCUIT	UA715
154	586-447	A6-9,23,24	INTEGRATED CIRCUIT	C A3026
155	586-533	A3,4,13,15,16, 19,22,25	INTEGRATED CIRCUIT	SN74121
156	586-700	A5,18	INTEGRATED CIRCUIT	SN74H74
159	602-012	J1,2	PLUG, SHORTING	
167	1374108-01	L1,2	INDUCTOR, FILTER	
168	932-034	FB1-3	BEAD, FERRITE, 0.250 LG	
169	932-035		BEAD, FERRITE, 0.125 LG, REF: Q1,4-6,8,9,11,12,17-19,27,28,46, 48,59,60,77-80,83	
170	030-056	C1-5,7,8,11,16-20, 22,28,31,32,34,36, 43,44,47-50,54-58, 62,65,70,72,74,77, 81,83,86-88,90,91, 95,98,102,104, 109,111,116,121, 126,127,129,132-134,137,141,143, 144,151,153,154, 156,159,163,164, 167-169,172,173	CAPACITOR, CER,0.02 MFD, 100V	

N

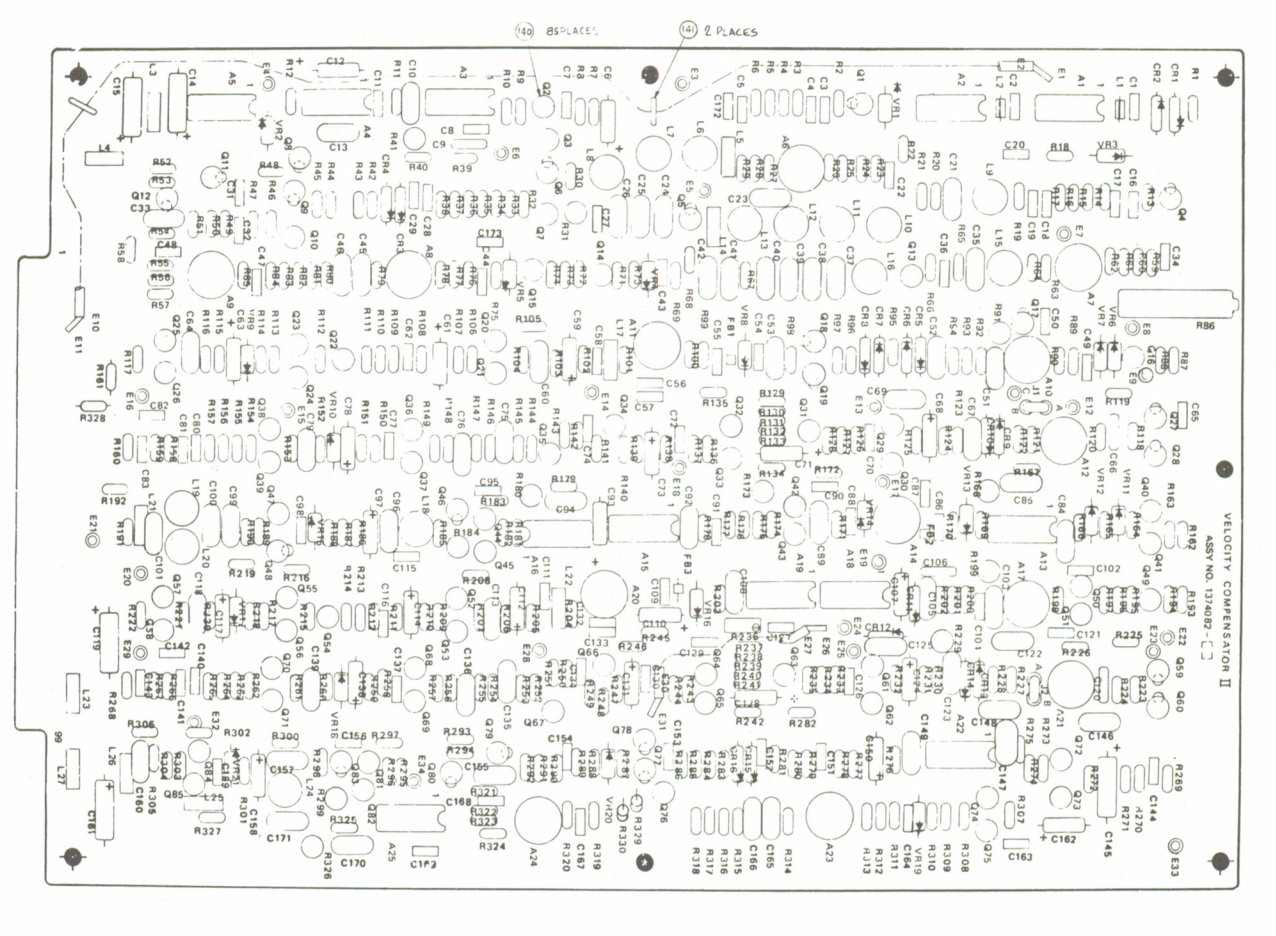

Assembly No. 1374082. Velocity Compensator No. 2, PWA, Board No. 27

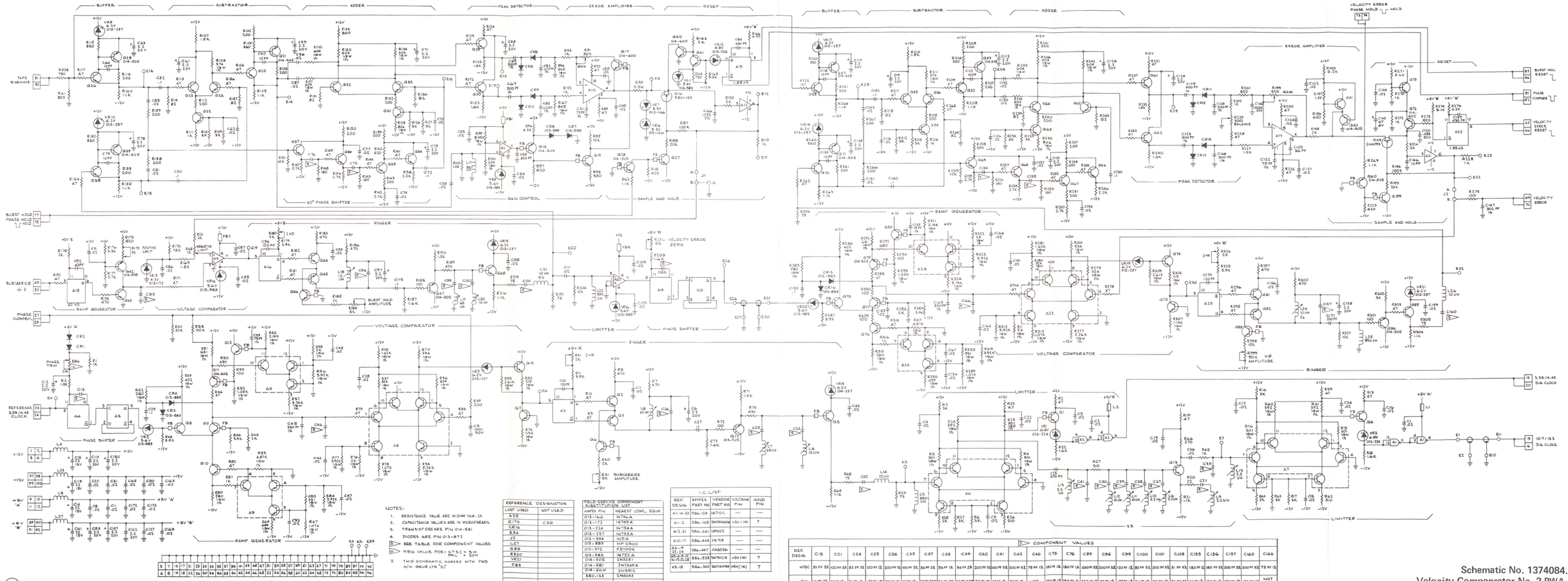

NOTES:

1. RESISTANCE VALUE ARE IN OHM VALUE.
2. CAPACITANCE VALUES ARE IN MICROFARADS.
3. TRANSISTORS ARE P/N 014-881
4. DIODES ARE P/N 015-972
5. SEE TABLE FOR COMPONENT VALUES
6. RBG VALUE FOR (NTSC = 5.1K, PAL = 12K)
7. THIS SCHEMATIC AGREES WITH PWB A/W ISSUE LTR "D."

REFERENCE DESIGNATION	
LAST USED	NOT USED
A25	
C179	C50
CR16	
E34	
J3	
L67	
Q82	
R330	
VR51	
Z33	

FIELD SERVICE COMPONENT SUBSTITUTION LIST	
AMPEX P/N	NEAREST COML EQUIV
013-166	1N746A
013-172	1N749A
013-724	1N754A
013-757	1N753A
013-929	1N754
013-883	HP 2900
013-972	FD1000
013-983	1N752A
014-505	2N3251
014-581	2N3569A
014-600	2N3991
580-153	EN4093

I.C. LIST				
REF. DESIG.	AMPEX PART NO	VENDOR PART NO	VOLTAGE PIN	GND PIN
A11-13, 20	586-124	LM710C	——	——
A1, 2,	586-148	SN74H00N	+5V (14)	7
A12, 21	586-164	LM301	——	——
A10, 17	586-445	MA715	——	——
A4-9, 22-24	586-447	CA3018	——	——
A14, A16, A18, A19, 25	586-533	SN74LLN	+5V (14)	7
A15, 18	586-700	SN74S74N	+5V (14)	7

REF. DESIG.	COMPONENT VALUES																												
	C15	C21	C24	C25	C26	C35	C37	C38	C39	C40	C41	C42	C46	C75	C76	C89	C96	C99	C100	C101	C108	C155	C156	C157	C160	C166
NTSC	51 PF 5%	100 PF 5%	82 PF 5%	100 PF 1%	200 PF 1%	100 PF 5%	34 PF 2%	54 PF 1%	34 PF 2%	200 PF 5%	100 PF 5%	200 PF 5%	75 PF 1%	180 PF 1%	180 PF 1%	430 PF 5%	200 PF 5%	120 PF 1%	82 PF 5%	200 PF 5%	51 PF 5%	180 PF 5%	180 PF 5%	200 PF 5%	200 PF 5%	75 PF 1%
PAL	10 PF 2%	62 PF 5%	54 PF 1%	75 PF 1%	120 PF 1%	62 PF 1%	22 PF 5%	34 PF 2%	22 PF 5%	120 PF 1%	62 PF 1%	120 PF 1%	NOT USED	150 PF 1%	150 PF 1%	330 PF 1%	120 PF 1%	75 PF 1%	54 PF 1%	120 PF 1%	36 PF 2%	150 PF 1%	150 PF 1%	120 PF 1%	120 PF 1%	NOT USED

Schematic No. 1374084.
Velocity Compensator No. 2 PWA,
Board No. 27

A

ITEM NO.	AMPEX PART NO.	REFERENCE NUMBER	DESCRIPTION	JEDEC NO. OR MFR. PART NO.
	1374176-03		LOGIC MODULE ASSEMBLY, NTSC	
2	1373285-28		OVERLAY	
3	1373272-01		SHIELD, PWB	
4	1373273-13		HANDLE, MODULE	
5	1373227-01		CONTACT, GND	
6	471-325		SCREW, MACH, FLAT HD, NO. 4-40 X 0.188	
7	473-325		SCREW, MACH, PAN HD, XREC, NO. 4-40 X 0.325 LG	
8	496-004		NUT, KEP, NO. 4	
9	501-169		WASHER, PLAIN, NO. 4	
10	250-188		BUMPER, PAD	
12	1374278-01		LOGIC PWA	
				E

SHEET 1 OF 1

ITEM NO.	AMPEX PART NO.	REFERENCE NUMBER	DESCRIPTION	JEDEC NO. OR MFR. PART NO.
	1374278-01		LOGIC PWA, BD NO. 28, NTSC	
3	1374280		SCHEMATIC	
5	013-166	VR3	DIODE, ZENER	1N746A
6	013-224	VR5	DIODE, ZENER	1N754A
7	013-599	CR1	DIODE	1N914
8	013-983	VR1,2,4	DIODE, ZENER	1N752A
10	014-505	Q2,4,5,8,10,12, 16,18	TRANSISTOR	2N3251
11	014-506	Q6,7	TRANSISTOR	2N2501
12	014-581	Q1,3,9,11,13,15, 17	TRANSISTOR	2N2369A
13	580-133	Q14	TRANSISTOR	2N4093
15	030-057	C5,7,11-14,16, 17,19,23,25,26, 29-32,35-40,42, 45-47,49,51, 53-55	CAPACITOR, CER, 0.01 MFD, 100V, 20%	
16	030-094	C3	CAPACITOR, MONO, CER, 1.0 MFD, 25V	
17	030-223	C8,9,10,33	CAPACITOR, MONO, CER, 2.2 MFD, 25V	
19	034-199	C4	CAPACITOR, MICA, 300 PF, 500V, 5%	
20	034-213	C50	CAPACITOR, MICA, 150 PF, 500V, 5%	
21	034-288	C1	CAPACITOR, MICA, 390 PF, 500V, 5%	
22	034-291	C20,27	CAPACITOR, MICA, 1600 PF, 500V, 5%	
23	034-347	C21	CAPACITOR, MICA, 180 PF, 500V, 5%	
24	034-934	C34	CAPACITOR, MICA, 360 PF, 500V, 5%	
25	034-940	C18,43,48	CAPACITOR, MICA, 82 PF, 500V, 5%	
26	034-962	C6,41,44,52	CAPACITOR, MICA, 33 PF, 500V, 5%	
28	035-734	C24	CAPACITOR, MYLAR, 0.01 MFD, 50V, 5%	
30	037-749	C22,56,57	CAPACITOR, TANT, 0.68 MFD, 15V, 10%	
31	037-991	C2,15,28	CAPACITOR, TANT, 22 MFD, 15V, 10%	
33	041-563	R35	RESISTOR, COMP, 240K, 1/4W, 5%	
34	042-379	R27	RESISTOR, MF, 5.9K, 1/8W, 1%	
36	044-805	R49	RESISTOR, VAR, MF, 2K, 1W, 10%	
37	044-943	R60	RESISTOR, VAR, MF, 2K, 1/2W, 20%	
38	044-944	R40	RESISTOR, VAR, MF, 5K, 1/2W, 20%	
41	051-761	L1	INDUCTOR, VAR, 0.68 UH, 20%	
44	057-056	R43	RESISTOR, MF, 22 OHM, 1/4W, 2%	
45	057-072	R42,53,66	RESISTOR, MF, 100 OHM, 1/4W, 2%	
46	057-083	R16,17,45,46	RESISTOR, MF, 300 OHM, 1/4W, 2%	
47	057-086	R20,21,22	RESISTOR, MF, 390 OHM, 1/4W, 2%	
48	057-089	R18,67	RESISTOR, MF, 510 OHM, 1/4W, 2%	
49	057-096	R12	RESISTOR, MF, 1K, 1/4W, 2%	
50	057-097	R13	RESISTOR, MF, 1.1K, 1/4W, 2%	
51	057-098	R7	RESISTOR, MF, 1.2K, 1/4W, 2%	
52	057-100	R36	RESISTOR, MF, 1.5K, 1/4W, 2%	
53	057-101	R57	RESISTOR, MF, 1.6K, 1/4W, 2%	
54	057-102	R9	RESISTOR, MF, 1.8K, 1/4W, 2%	

—

ASSEMBLY NO. 1374278 TITLE LOGIC PWA, BD NO. 28, NTSC

ITEM NO.	AMPEX PART NO.	REFERENCE NUMBER	DESCRIPTION	JEDEC NO. OR MFR. PART NO.
55	057-103	R34,47,59	RESISTOR, MF, 2K, 1/4W, 2%	
56	057-104	R8,10,14,24,26, 28,37,50-52,64, 65	RESISTOR, MF, 2.2K, 1/4W, 2%	
57	057-105	R54	RESISTOR, MF, 2.4K, 1/4W, 2%	
58	057-107	R15,33,55	RESISTOR, MF, 3K, 1/4W, 2%	
59	057-108	R19,44,63	RESISTOR, MF, 3.3K, 1/4W, 2%	
60	057-110	R41	RESISTOR, MF, 3.9K, 1/4W, 2%	
61	057-116	R61	RESISTOR, MF, 6.8K, 1/4W, 2%	
62	057-117	R5,6	RESISTOR, MF, 7.5K, 1/4W, 2%	
63	057-120	R11,39	RESISTOR, MF, 10K, 1/4W, 2%	
64	057-122	R23	RESISTOR, MF, 12K, 1/4W, 2%	
65	057-128	R31	RESISTOR, MF, 22K, 1/4W, 2%	
66	057-134	R62	RESISTOR, MF, 39K, 1/4W, 2%	
67	057-135	R38	RESISTOR, MF, 43K, 1/4W, 2%	
68	057-136	R32	RESISTOR, MF, 47K, 1/4W, 2%	
70	058-004	R58	RESISTOR, VAR, MF, 1K, 1/2W, 30%	
71	058-610	R56	RESISTOR, VAR, MF, 20K, 1/2W, 20%	
73	062-862	R1,3	RESISTOR, MF, 143 OHM, 1/8W, 1%	
74	062-902	R30	RESISTOR, MF, 499 OHM, 1/8W, 1%	
75	062-920	R2	RESISTOR, MF, 866 OHM, 1/8W, 1%	
76	062-976	R48	RESISTOR, MF, 7.15K, 1/8W, 1%	
78	066-173	R29	RESISTOR, MF, 2.94K, 1/8W, 1%	
79	066-175	R4	RESISTOR, MF, 1.18K, 1/8W, 1%	
80	066-752	R25	RESISTOR, MF, 11.8K, 1/8W, 1%	
82	143-981		JACK, PC	
84	226-035	L2-4	CORE, SIX APERTURE	
86	280-130		SPACER, XSTR, T0-18	
88	586-121	A2	INTEGRATED CIRCUIT	UA711C
89	586-124	A6	INTEGRATED CIRCUIT	UA710C
90	586-167	A23	INTEGRATED CIRCUIT	SN74H10N
91	586-168	A20,30,32	INTEGRATED CIRCUIT	SN74H00N
92	586-268	A1,4,5	INTEGRATED CIRCUIT	UA741C
93	586-283	A29	INTEGRATED CIRCUIT	SN7493N
94	586-445	A36,43	INTEGRATED CIRCUIT	SN7475N
95	586-447	A3	INTEGRATED CIRCUIT	CA3026
96	586-533	A7-9,12,15,21, 22,31,33,34,38-40	INTEGRATED CIRCUIT	SN74121N
97	586-554	A10,17	INTEGRATED CIRCUIT	SN7483N
98	586-688	A11,14,19,41	INTEGRATED CIRCUIT	SN74H04N
99	586-700	A13,16,24,26-28, 37	INTEGRATED CIRCUIT	SN74H74N
100	586-800	A35,42	INTEGRATED CIRCUIT	SN74193N
101	586-870	A18,25	INTEGRATED CIRCUIT	SN74197N
104	602-012	J1-5	PLUG, SHORTING	
				—

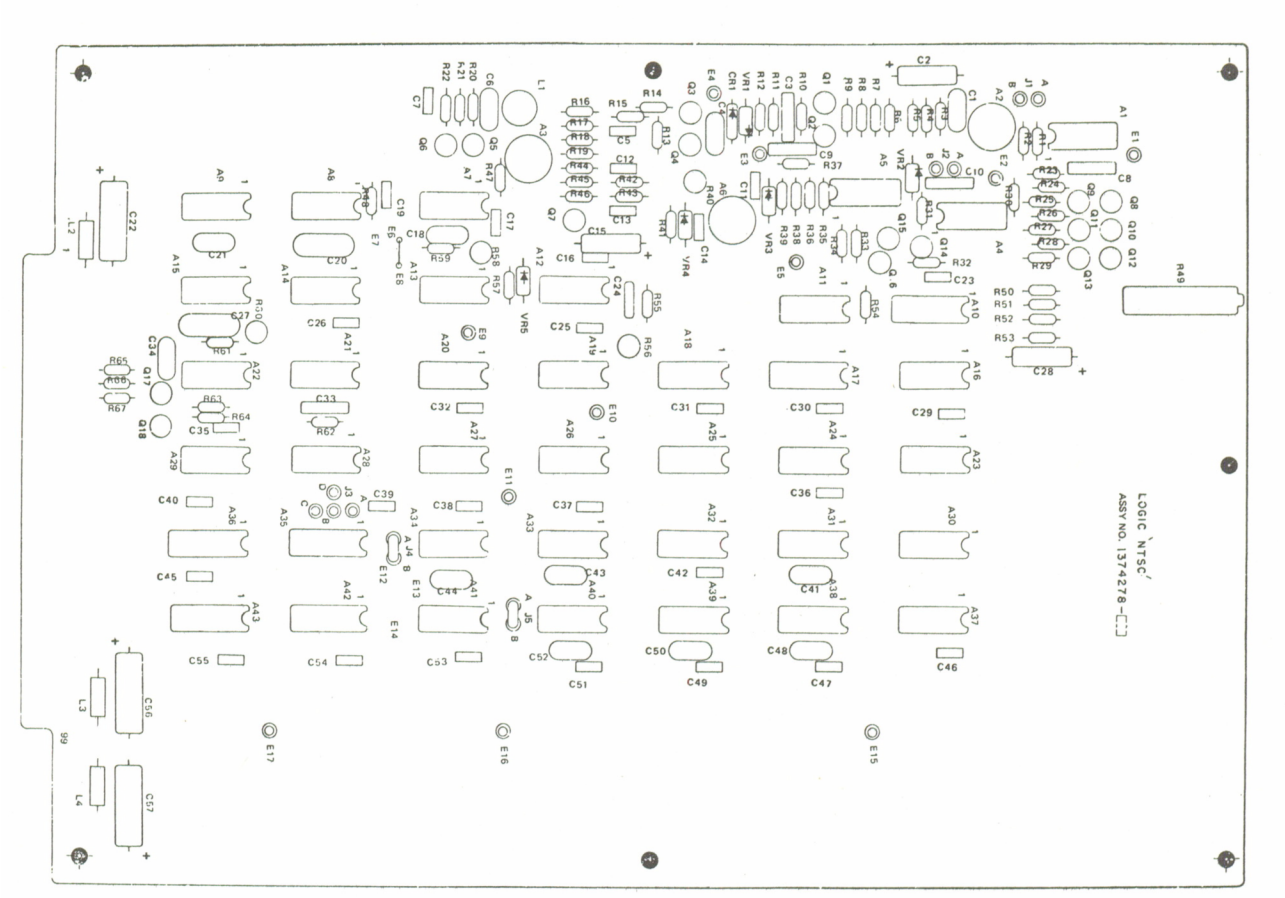

Assembly No. 1374278. Logic PWA, Board No. 28, NTSC

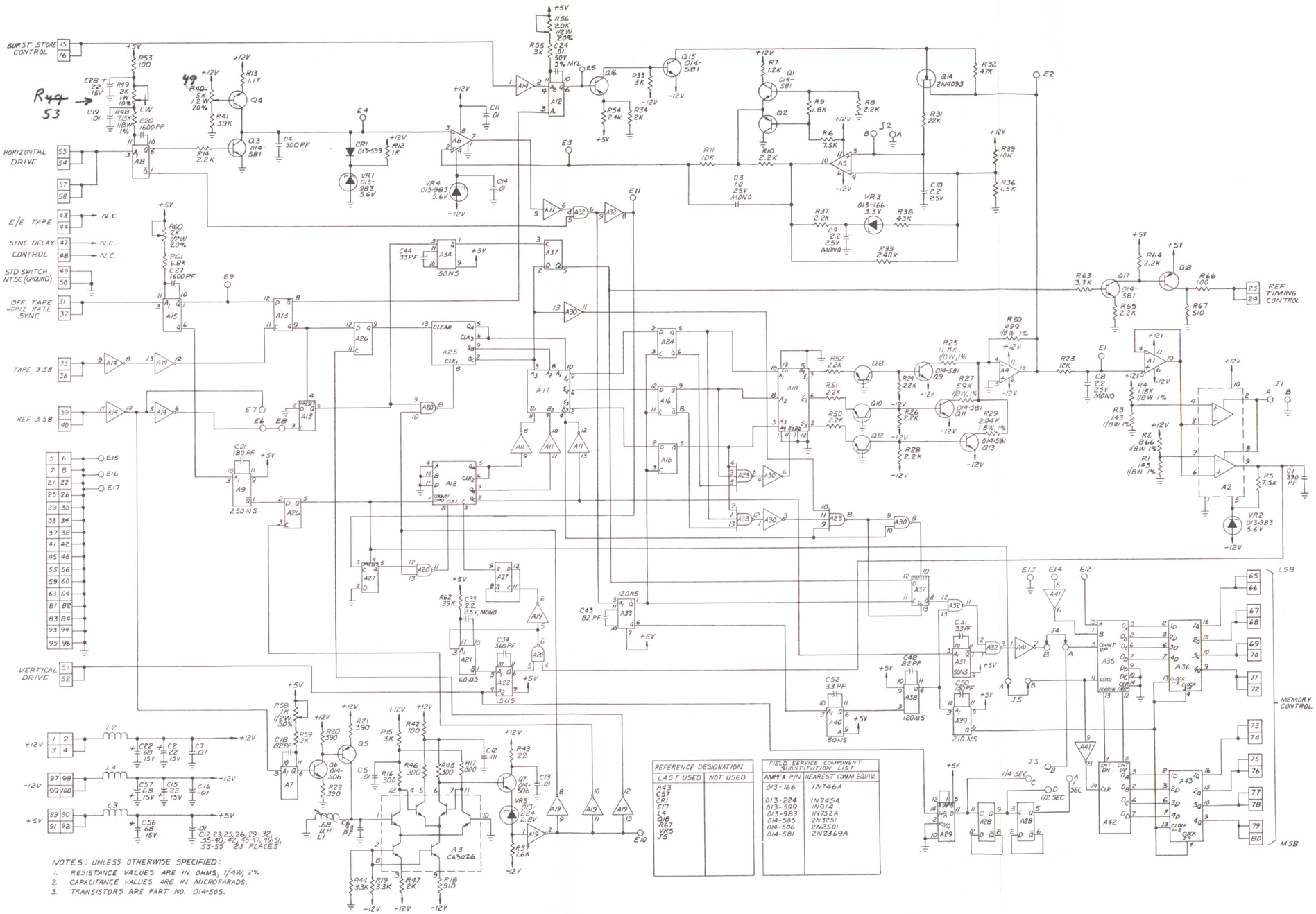

REFERENCE DESIGNATION	
LAST USED	NOT USED
A43	
C57	
CR1	
E17	
L4	
Q18	
R67	
VR5	
J5	

FIELD SERVICE COMPONENT SUBSTITUTION LIST	
AMPEX P/N	NEAREST COMM EQUIV.
013-166	1N746A
013-224	1N745A
013-599	1N914
013-983	1N752A
014-505	2N3251
014-506	2N2501
014-581	2N2369A

INTEGRATED CIRCUIT LIST

REFERENCE DESIGNATION	A23	A20,30, 32	A2	A6	A1,4,5	A29	A36,43	A3	A7-9,11,15, 21,23,31,33, 34,38-40	A10,17	A11,14,19, 41	A13,16,24, 26-28,37	A35,42	A18,25
AMPEX P/N	586-167	586-168	586-121	586-124	586-268	586-283	586-445	586-447	586-533	586-554	586-688	586-700	586-800	586-870
VENDOR P/N	SN74H10N	SN74H00	711C	710 C	741C	SN7493	SN7475	CA3026	SN74121	SN7883	SN74H04	SN74H74	SN74193	SN74197
VOLTAGE (PIN)	+5V(14)	+5V (14)	+12V(10) -6V (5)	+12V(8) -6V (4)	+12V(11) -12V (6)	+5V (5)	+5V (5)	—	+5V(14)	+5V (5)	+5V(14)	+5V (14)	+5V(16)	+5V(14)
GROUND PIN	7	7	1	1	—	10	12	—	7	12	7	7	8	7

Schematic No. 1374280.
Logic PWA, NTSC, Board No. 28

ITEM NO.	AMPEX PART NO.	REFERENCE NUMBER	DESCRIPTION	JEDEC NO. OR MFR. PART NO.
	1374183-06		LOGIC MODULE ASSEMBLY, PAL/SECAM	
2	1373285-37		OVERLAY	
3	1375477-01		SHIELD, PWB	
4	1373273-12		HANDLE, MODULE	
5	1373227-01		CONTACT, GROUND	
6	471-325		SCREW, MACH, FLAT HD, NO. 4–40 X 0.188 LG	
7	473-325		SCREW, MACH, PAN HD, XREC, NO. 4–40 X 0.325 LG	
8	496-004		NUT, KEP, NO. 4	
9	501-169		WASHER, PLAIN, NO. 4	
10	119-259		SWITCH, SPDT	
12	250-188		BUMPER, PAD	
14	1374284-01		LOGIC PWA	
				D

SHEET 1 OF 1

ITEM NO.	AMPEX PART NO.	REFERENCE NUMBER	DESCRIPTION	JEDEC NO. OR MFR. PART NO.
	1374284-01		LOGIC PWA, BD NO. 28, PAL/SECAM (NHA 1374183)	
3	1374286		SCHEMATIC	
5	013-166	VR3	DIODE	1N746A
6	013-224	VR5	DIODE	1N754A
7	013-599	CR1-3	DIODE	1N914
8	013-983	VR1,2,4,6-8	DIODE	1N752A
10	014-505	Q2,4,5,7-13,19, 21,25,28,30,32	TRANSISTOR	2N3251
11	014-506	Q6,20	TRANSISTOR	2N2501
12	014-581	Q1,3,14-16,18, 22,23,24,26,27, 29,31	TRANSISTOR	2N2369A
13	580-133	Q17	TRANSISTOR	2N4093
15	030-056	C2,3,9,13,21, 29-34,38,40,42,43, 45,46,48-53,55-57, 60,62,64,65,67, 69-71,73,74, 77-79,81-84,87, 89,91,93,95,96	CAPACITOR, CER, 0.02 MFD, 100V, 20%	
16	030-057	C1,7,11,12,18, 19,22,23,26, 35,36	CAPACITOR, CER, 0.01 MFD, 100V, 20%	
17	030-094	C5,85	CAPACITOR, MONO, 1.0 MFD, 25V, 20%	
18	030-223	C15,16,17,58	CAPACITOR, MONO, 2.2 MFD, 25V, 20%	
20	034-199	C6	CAPACITOR, MICA, 300 PF, 500V, 5%	
21	034-213	C37,44	CAPACITOR, MICA, 150 PF, 500V, 5%	
22	034-243	C63,76	CAPACITOR, MICA, 3000 PF, 500V, 1%	
23	034-288	C4	CAPACITOR, MICA, 390 PF, 500V, 5%	
24	034-291	C14,28	CAPACITOR, MICA, 1600 PF, 500V, 5%	
25	034-347	C68	CAPACITOR, MICA, 180 PF, 500V, 5%	
26	034-888	C54,61,80,92,94	CAPACITOR, MICA, 430 PF, 500V, 5%	
27	034-934	C59	CAPACITOR, MICA, 360 PF, 500V, 5%	
28	034-940	C41	CAPACITOR, MICA, 82 PF, 500V, 5%	
29	034-941	C24	CAPACITOR, MICA, 51 PF, 500V, 5%	
30	034-962	C8,39,47,66	CAPACITOR, MICA, 33 PF, 500V, 5%	
32	035-729	C90	CAPACITOR, MYLAR, 0.0015 MFD, 50V, 5%	
33	035-730	C72	CAPACITOR, MYLAR, 0.0047 MFD, 50V, 5%	
34	035-893	C88	CAPACITOR, MYLAR, 0.1 MFD, 50V, 5%	
36	055-166	C75	CAPACITOR, MYLAR, 0.001 MFD, 50V, 5%	
37	037-749	C25,97,98	CAPACITOR, TANT, 68 MFD, 15V, 10%	
38	037-991	C10,20,27,86	CAPACITOR, TANT, 22 MFD, 15V, 10%	

ITEM NO.	AMPEX PART NO.	REFERENCE NUMBER	DESCRIPTION	JEDEC NO. OR MFR. PART NO.
40	041-431	R49	RESISTOR, COMP, 150K, 1/4W, 5%	
41	057-079	R55	RESISTOR, MF, 200 OHM, 1/4W, 2%	
42	057-056	R56	RESISTOR, MF, 22 OHM, 1/4W, 2%	
43	057-064	R102-104,119	RESISTOR, MF, 47 OHM, 1/4W, 2%	
44	057-072	R9,14,73,75,79	RESISTOR, MF, 100 OHM, 1/4W, 2%	
45	057-081	R85	RESISTOR, MF, 240 OHM, 1/4W, 2%	
46	057-083	R40,41,58,59	RESISTOR, MF, 300 OHM, 1/4W, 2%	
47	057-086	R44,46	RESISTOR, MF, 390 OHM, 1/4W, 2%	
48	057-087	R99	RESISTOR, MF, 430 OHM, 1/4W, 2%	
49	057-088	R91,100,116, 117,123	RESISTOR, MF, 470 OHM, 1/4W, 2%	
50	057-089	R42,78	RESISTOR, MF, 510 OHM, 1/4W, 2%	
51	057-095	R96	RESISTOR, MF, 910 OHM, 1/4W, 2%	
52	057-096	R7,11,12,15,26, 86,87,88,114	RESISTOR, MF, 1K, 1/4W, 2%	
53	057-097	R37	RESISTOR, MF, 1.1K, 1/4W, 2%	
54	057-098	R31,35,94	RESISTOR, MF, 1.2K, 1/4W, 2%	
55	057-099	R115	RESISTOR, MF, 1.3K, 1/4W, 2%	
56	057-100	R50	RESISTOR, MF, 1.5K, 1/4W, 2%	
57	057-101	R63	RESISTOR, MF, 1.6K, 1/4W, 2%	
58	057-102	R33	RESISTOR, MF, 1.8K, 1/4W, 2%	
59	057-103	R62,64,66, 105-108,110,111	RESISTOR, MF, 2K, 1/4W, 2%	
60	057-104	R18,20,22,32,34, 38,48,69,70,71, 74,77,98	RESISTOR, MF, 2.2K, 1/4W, 2%	
61	057-105	R72	RESISTOR, MF, 2.4K, 1/4W, 2%	
62	057-106	R8,10,13,16	RESISTOR, MF, 1.7K, 1/4W, 2%	
63	057-107	R39,61,95	RESISTOR, MF, 3K, 1/4W, 2%	
64	057-108	R43,57,76,101	RESISTOR, MF, 3.3K, 1/4W, 2%	
65	057-109	R84	RESISTOR, MF, 3.6K, 1/4W, 2%	
66	057-110	R54,68	RESISTOR, MF, 3.9K, 1/4W, 2%	
67	057-112	R3	RESISTOR, MF, 4.7K, 1/4W, 2%	
68	057-115	R97,109,112, 121,122	RESISTOR, MF, 6.2K, 1/4W, 2%	
69	057-116	R80,82	RESISTOR, MF, 6.8K, 1/4W, 2%	
70	057-117	R30	RESISTOR, MF, 7.5K, 1/4W, 2%	
71	057-119	R89	RESISTOR, MF, 9.1K, 1/4W, 2%	
72	057-120	R52,67,93	RESISTOR, MF, 10K, 1/4W, 2%	
73	057-121	R6	RESISTOR, MF, 11K, 1/4W, 2%	
74	057-122	R17	RESISTOR, MF, 12K, 1/4W, 2%	
75	057-128	R47	RESISTOR, MF, 22K, 1/4W, 2%	
76	057-129	R118	RESISTOR, MF, 24K, 1/4W, 2%	
77	057-130	R120	RESISTOR, MF, 27K, 1/4W, 2%	

ITEM NO.	AMPEX PART NO.	REFERENCE NUMBER	DESCRIPTION	JEDEC NO. OR MFR. PART NO.
78	057-134	R81	RESISTOR, MF, 39K, 1/4W, 2%	
79	057-135	R51	RESISTOR, MF, 43K, 1/4W, 2%	
80	057-136	R60	RESISTOR, MF, 47K, 1/4W, 2%	
81	057-113	R29	RESISTOR, MF, 5.1K, 1/4W, 2%	
82	042-379	R21	RESISTOR, MF, 5.9K, 1/8W, 1%	
83	066-793	R25	RESISTOR, MF, 787 OHM, 1/8W, 1%	
84	062-862	R24,27	RESISTOR, MF, 143 OHM, 1/8W, 1%	
85	062-902	R26	RESISTOR, MF, 499 OHM, 1/8W, 1%	
87	066-173	R19	RESISTOR, MF, 2.94K, 1/8W, 1%	
88	066-175	R28	RESISTOR, MF, 1.18K, 1/8W, 1%	
89	066-752	R23	RESISTOR, MF, 11.8K, 1/8W, 1%	
90	066-784	R83,90	RESISTOR, MF, 30.9K, 1/8W, 1%	
92	044-805	R1,2	RESISTOR, VAR, 2K, 1W, 10%	
93	044-943	R4,5	RESISTOR, VAR, 2K, 1/2W, 20%	
94	044-944	R53	RESISTOR, VAR, 5K, 1/2W, 20%	
95	058-004	R65,113	RESISTOR, VAR, 1K, 1/2W, 30%	
96	058-611	R92	RESISTOR, VAR, 10K, 1/2W, 20%	
99	143-981	J1-A,B, J2-A,B, J3-A,B, J4-A,B, J5-A,B,C,D, J6-A,B,C, J7-A,B,	JACK, PC	
100	226-035	L2-4	CORE, SIX APERTURE	
101	280-130		SPACER, XSTR	
102	540-085	L1	INDUCTOR, VAR, 0.47 UH, 20%	
104	586-121	A2,70	INTEGRATED CIRCUIT	UA711C
105	586-124	A6,72	INTEGRATED CIRCUIT	UA710C
106	586-168	A16,27,29,33,46, 67,75	INTEGRATED CIRCUIT	74H00N
107	586-268	A1,4,5,71	INTEGRATED CIRCUIT	UA741C
108	586-283	A56	INTEGRATED CIRCUIT	7493N
109	586-445	A51,52,60,61	INTEGRATED CIRCUIT	7475N
110	586-447	A7	INTEGRATED CIRCUIT	CA3026
111	586-533	A3,8,9,17-19,26, 28,35,42-45,47, 48,57,62,63, 65,73	INTEGRATED CIRCUIT	7412IN
112	586-554	A11,21	INTEGRATED CIRCUIT	7483N
113	586-688	A10,22,34,40, 54,68,74	INTEGRATED CIRCUIT	74H04N
114	586-167	A12	INTEGRATED CIRCUIT	74H10N
115	586-700	A20,25,30-32,36, 37,49,53,55,58, 64,66,69,76	INTEGRATED CIRCUIT	74H74N
116	586-800	A50,59	INTEGRATED CIRCUIT	74193N
117	586-830	A24	INTEGRATED CIRCUIT	74S00N

ITEM NO.	AMPEX PART NO.	REFERENCE NUMBER	DESCRIPTION	JEDEC NO. OR MFR. PART NO.
118	586-831	A15	INTEGRATED CIRCUIT	74S04N
119	587-008	A38	INTEGRATED CIRCUIT	9324DC
120	587-095	A14,41	INTEGRATED CIRCUIT	74S74N
121	586-870	A13,23,39	INTEGRATED CIRCUIT	74197N
124	602-012	J3,4,6,7	PLUG, SHORTING	

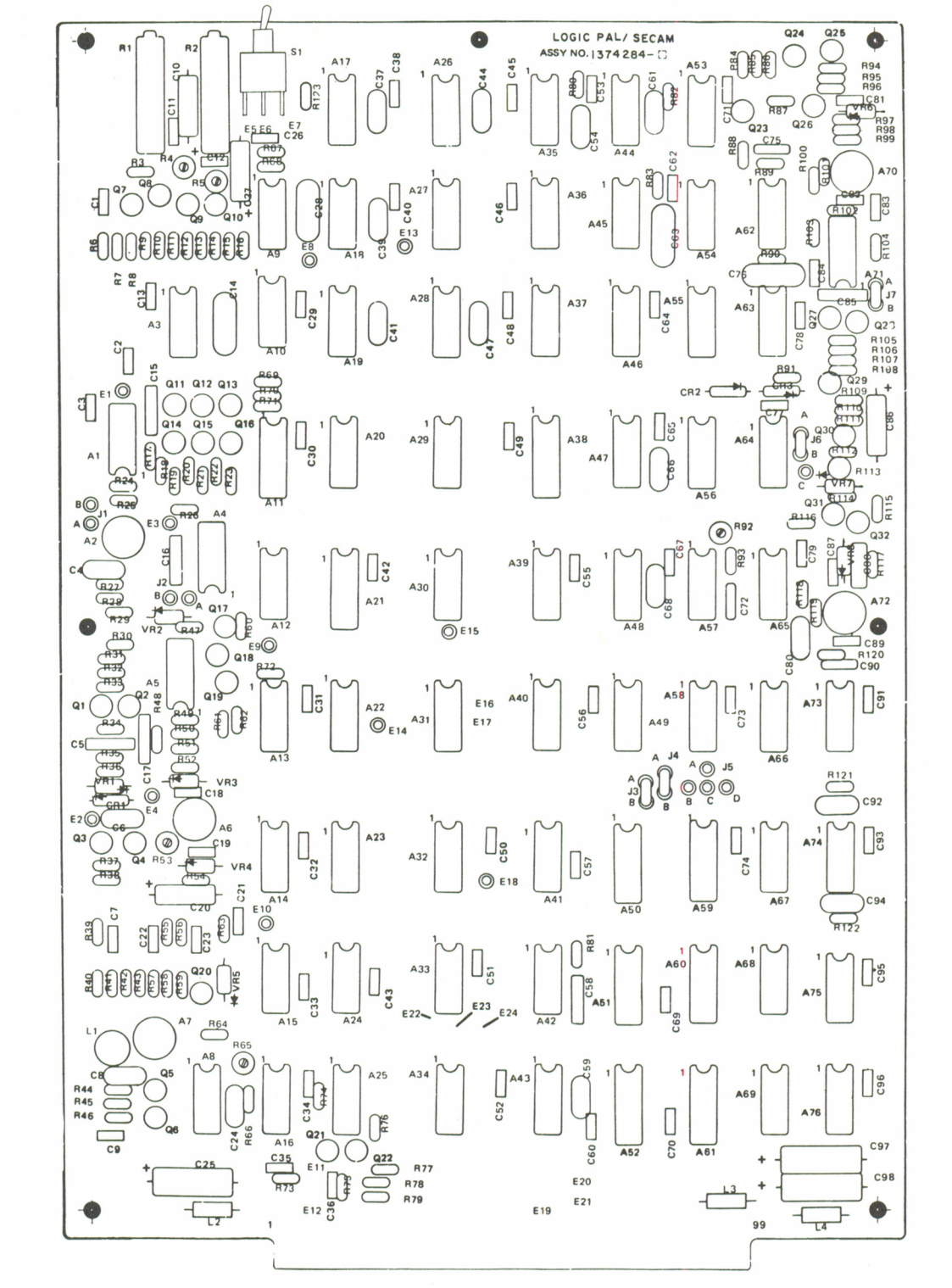

Assembly No. 1374284. Logic PWA, Board No. 28, PAL/SECAM

ITEM NO.	AMPEX PART NO.	REFERENCE NUMBER	DESCRIPTION	JEDEC NO. OR MFR. PART NO.
	1374293-01		LOGIC MODULE ASSEMBLY, PAL-M (NHA: 1374001)	
1	1374094-01		LOGIC PWA	
2	1373285-28		OVERLAY	
3	1373272-01		SHIELD, PWB	
4	1373273-13		HANDLE, MODULE	
5	1373227-01		CONTACT, GND	
6	471-325		SCREW, MACH, FLAT HD, NO. 4-40 X 0.188 LG	
7	473-325		SCREW, MACH, PAN HD, XREC, NO. 4-40 X 0.325 LG	
8	496-004		NUT, KEP, NO. 4	
9	501-169		WASHER, PLAIN, NO. 4	
10	250-188		BUMPER, PAD, BLK RUBBER, ADH BACK	

SHEET 1 OF 1

ITEM NO.	AMPEX PART NO.	REFERENCE NUMBER	DESCRIPTION	JEDEC NO. OR MFR. PART NO.
	1374094-01		LOGIC PWA, BD NO. 28, PAL-M (NHA 1374293)	
3	1374096		SCHEMATIC	
6	013-166	VR3	DIODE	1N746A
7	013-224	VR5	DIODE	1N754A
8	013-599	CR1-3	DIODE	1N914
9	013-983	VR1,2,4,6-8	DIODE	1N752A
11	014-505	Q2,4-6,10-12,18, 20,23,26,28,30	TRANSISTOR	2N3251
12	014-506	Q7-9	TRANSISTOR	2N2501
13	014-581	Q1,3,13-15,17,19, 21,22,24,25,27,29	TRANSISTOR	2N2369A
14	580-133	Q16	TRANSISTOR	2N4093
16	030-056	C1,5,10,19,23,24, 26,29,33-35,37, 39,40,42,43,46-49,51,52,56-58, 60,61,63-65,67, 70,72-74,77-80, 83,85,87,89,91,92	CAPACITOR, CER, 0.02 MFD, 100V, 20%	
17	030-057	C7,8,14,17,21, 22,32	CAPACITOR, CER, 0.01 MFD, 100V, 20%	
18	030-094	C3,81	CAPACITOR, MONO, 1.0 MFD, 25V, 20%	
19	030-223	C11,12,13,15,53	CAPACITOR, MONO, 2.2 MFD, 25V, 20%	
21	034-161	C27,41	CAPACITOR, MICA, 2000 PF, 500V, 5%	
22	034-199	C4	CAPACITOR, MICA, 300 PF, 500V, 5%	
23	034-213	C76	CAPACITOR, MICA, 150 PF, 500V, 5%	
24	034-243	C68,71	CAPACITOR, MICA, 3000 PF, 500V, 1%	
25	034-288	C2	CAPACITOR, MICA, 390 PF, 500V, 5%	
26	034-347	C25	CAPACITOR, MICA, 180 PF, 500V, 5%	
27	034-888	C36,38,50,66, 88,90	CAPACITOR, MICA, 430 PF, 500V, 5%	
28	034-934	C54	CAPACITOR, MICA, 360 PF, 500V, 5%	
29	034-940	C30,59,62	CAPACITOR, MICA, 82 PF, 500V, 5%	
30	034-962	C9,16,44,45,69	CAPACITOR, MICA, 33 PF, 500V, 5%	
32	035-729	C86	CAPACITOR, MYLAR, 0.0015 MFD, 50V, 5%	
33	035-730	C28	CAPACITOR, MYLAR, 0.0047 MFD, 50V, 5%	
34	035-893	C84	CAPACITOR, MYLAR, 0.1 MFD, 50V, 5%	
35	055-166	C75	CAPACITOR, MYLAR, 0.001 MFD, 50V, 5%	
36	037-749	C18,93,94	CAPACITOR, TANT, 68 MFD, 15V, 10%	
37	037-991	C6,20,31,82	CAPACITOR, TANT, 22 MFD, 15V, 10%	
39	057-148	R31	RESISTOR, COMP, 150K, 1/4W, 2%	
40	057-056	R43	RESISTOR, MF, 22 OHM, 1/4W, 2%	
41	057-064	R98-100,113	RESISTOR, MF, 47 OHM, 1/4W, 2%	
42	057-072	R38,42,58,69,76	RESISTOR, MF, 100 OHM, 1/4W, 2%	
43	057-076	R75	RESISTOR, MF, 150 OHM, 1/4W, 2%	
44	057-081	R82	RESISTOR, MF, 240 OHM, 1/4W, 2%	

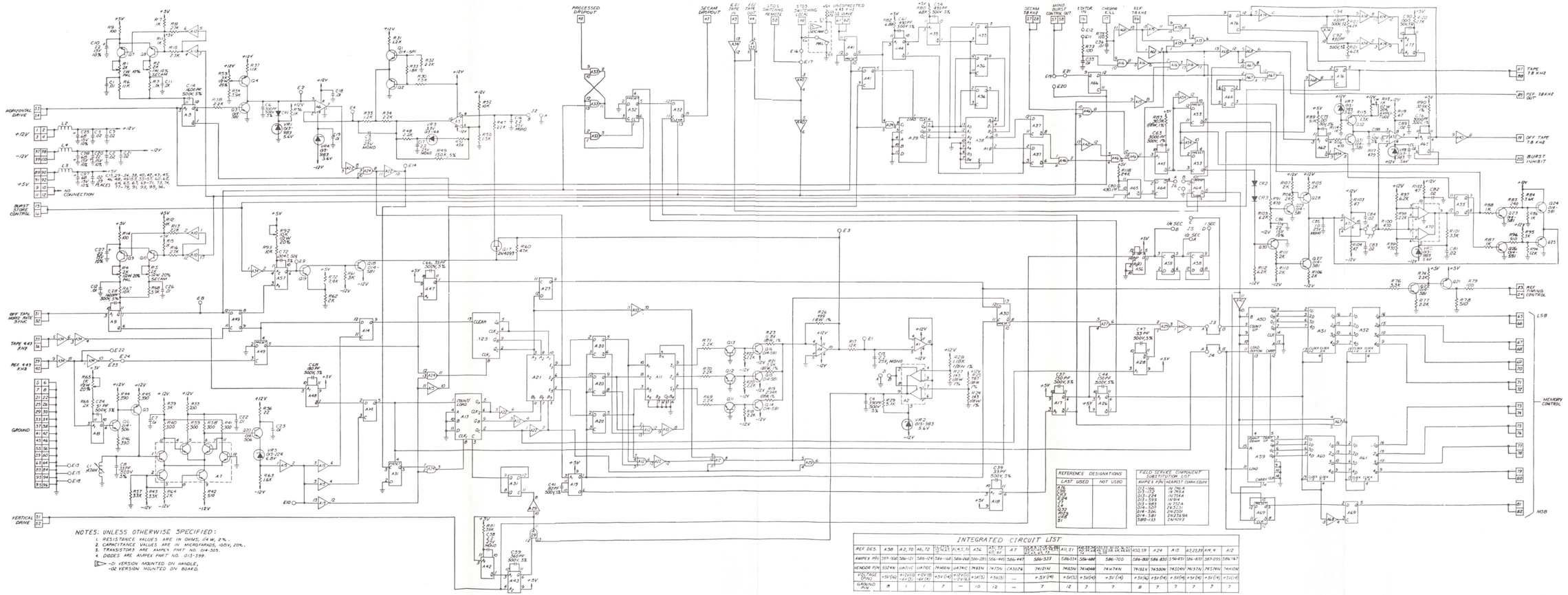

Schematic No. 1374286.
Logic PWA, PAL/SECAM, Board No. 28

AMPEX 1809178-03

11-283/284

ASSEMBLY NO. 1374094-01 TITLE LOGIC PWA, BD NO. 28, PAL-M

ITEM NO.	AMPEX PART NO.	REFERENCE NUMBER	DESCRIPTION	JEDEC NO. OR MFR. PART NO.
45	057-083	R16,17,47,48	RESISTOR, MF, 300 OHM, 1/4W, 2%	
46	057-086	R18-20	RESISTOR, MF, 390 OHM, 1/4W, 2%	
47	057-087	R95	RESISTOR, MF, 430 OHM, 1/4W, 2%	
48	057-088	R88,89,96,112	RESISTOR, MF, 470 OHM, 1/4W, 2%	
49	057-089	R44	RESISTOR, MF, 510 OHM, 1/4W, 2%	
50	057-095	R92	RESISTOR, MF, 920 OHM, 1/4W, 2%	
51	057-096	R12,39,83,84,87, 110,111	RESISTOR, MF, 1K, 1/4W, 2%	
52	057-097	R14	RESISTOR, MF, 1.1K, 1/4W, 2%	
53	057-098	R7,90	RESISTOR, MF, 1.2K, 1/4W, 2%	
55	057-100	R32	RESISTOR, MF, 1.5K, 1/4W, 2%	
56	057-101	R65	RESISTOR, MF, 1.6K, 1/4W, 2%	
57	057-102	R9	RESISTOR, MF, 1.8K, 1/4W, 2%	
58	057-103	R49,56,61,62,67, 101-104,106,107	RESISTOR, MF, 2K, 1/4W, 2%	
59	057-104	R8,10,13,22,24, 26,30,51,52,53, 68,74,94	RESISTOR, MF, 2.2K, 1/4W, 2%	
60	057-105	R57	RESISTOR, MF, 2.4K, 1/4W, 2%	
61	057-107	R15,40,55,91	RESISTOR, MF, 3K, 1/4W, 2%	
62	057-108	R45,46,73,97	RESISTOR, MF, 3.3K, 1/4W, 2%	
63	057-109	R81	RESISTOR, MF, 3.6K, 1/4W, 2%	
64	057-110	R36	RESISTOR, MF, 3.9K, 1/4W, 2%	
65	057-113	R60,70	RESISTOR, MF, 5.1K, 1/4W, 2%	
66	057-115	R37,93,105,108, 115,116	RESISTOR, MF, 6.2K, 1/4W, 2%	
67	057-116	R71,77,80	RESISTOR, MF, 6.8K, 1/4W, 2%	
68	057-117	R5,6	RESISTOR, MF, 7.5K, 1/4W, 2%	
69	057-119	R86	RESISTOR, MF, 9.1K, 1/4W, 2%	
70	057-120	R11,34,64	RESISTOR, MF, 10K, 1/4W, 2%	
71	057-123	R41	RESISTOR, MF, 13K, 1/4W, 2%	
72	057-128	R29,114	RESISTOR, MF, 22K, 1/4W, 2%	
73	057-129	R72	RESISTOR, MF, 24K, 1/4W, 2%	
74	057-122	R21	RESISTOR, MF, 12K, 1/4W, 2%	
75	057-134	R78	RESISTOR, MF, 39K, 1/4W, 2%	
76	057-135	R33	RESISTOR, MF, 43K, 1/4W, 2%	
77	057-136	R54	RESISTOR, MF, 47K, 1/4W, 2%	
79	044-805	R50	RESISTOR, VAR, 2K, 1W, 10%	
80	044-943	R59	RESISTOR, VAR, 2K, 1/2W, 20%	
81	044-944	R35	RESISTOR, VAR, 5K, 1/2W, 20%	
82	**058-004**	**R66,109**	RESISTOR, VAR, 1K, 1/2W, 20%	
83	058-611	R63	RESISTOR, VAR, 10K, 1/2W, 20%	
85	042-379	R27	RESISTOR, MF, 5.9K, 1/8W, 1%	
86	**042-862**	**R1,3**	RESISTOR, MF, 143 OHM, 1/8W, 1%	
87	062-902	R28	RESISTOR, MF, 499 OHM, 1/8W, 1%	

ASSEMBLY NO. 1374094-01 TITLE LOGIC PWA, BD NO. 28, PAL-M

ITEM NO.	AMPEX PART NO.	REFERENCE NUMBER	DESCRIPTION	JEDEC NO. OR MFR. PART NO.
88	062-920	R2	RESISTOR, MF, 866 OHM, 1/8W, 1%	
89	066-173	R25	RESISTOR, MF, 2.94K, 1/8W, 1%	
90	066-175	R4	RESISTOR, MF, 1.18K, 1/8W, 1%	
91	066-752	R23	RESISTOR, MF, 11.8K, 1/8W, 1%	
92	066-784	R79,85	RESISTOR, MF, 30.9K, 1/8W, 1%	
94	143-981	J1-AB,J2-AB, J3-AB,J4-AB, J5-ABCD, J6-ABC,J7-AB	JACK, PC	
96	226-035	L2-4	CORE, SIX APERTURE	
98	280-130		SPACER, XSTR	
100	540-083	L1	INDUCTOR, VAR, 0.68 UH	
102	586-121	A2,66	INTEGRATED CIRCUIT	UA711C
103	586-124	A8,68	INTEGRATED CIRCUIT	UA710C
104	586-167	A24	INTEGRATED CIRCUIT	SN74H10N
105	586-168	A23,35,60,71	INTEGRATED CIRCUIT	SN74H00N
106	586-268	A1,4,5,67	INTEGRATED CIRCUIT	UA741C
107	586-283	A45	INTEGRATED CIRCUIT	SN7493N
108	586-445	A47,48,56,57	INTEGRATED CIRCUIT	SN7475N
109	586-447	A3	INTEGRATED CIRCUIT	CA3026
110	586-533	A6,7,9,10,13,16, 18,22,25,26,31, 38,39,42,44,49, 50,51,59,61,62, 69	INTEGRATED CIRCUIT	SN74121N
111	586-554	A14,27	INTEGRATED CIRCUIT	SN7483N
112	586-688	A28,30,43,64,70	INTEGRATED CIRCUIT	SN74H04N
113	586-700	A15,21,32,34, 36,37,40,52,53, 54,58,63,65,72	INTEGRATED CIRCUIT	SN74H74N
114	586-800	A46,55	INTEGRATED CIRCUIT	SN74193N
115	586-830	A20	INTEGRATED CIRCUIT	SN74S00N
116	586-831	A12	INTEGRATED CIRCUIT	SN74S04N
117	586-870	A19,29,33	INTEGRATED CIRCUIT	SN74197N
118	587-008	A41	INTEGRATED CIRCUIT	9324N
119	587-095	A11,17	INTEGRATED CIRCUIT	SN74S74N
122	602-012	J3,4,6,7	PLUG, SHORTING	

SHEET 3 OF 3

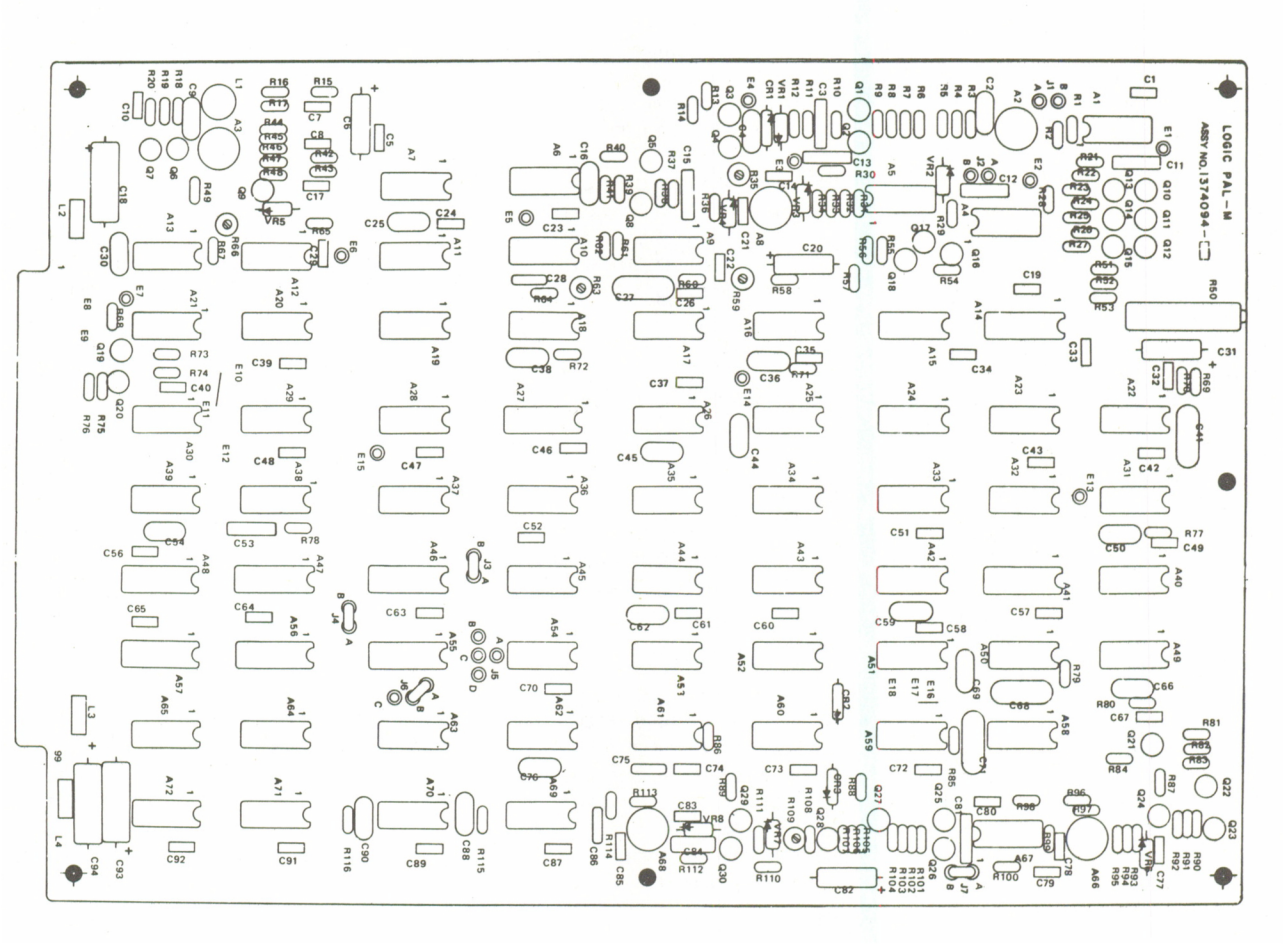

Assembly No. 1374094. Logic PWA, Board No. 28, PAL-M

ITEM NO.	AMPEX PART NO.	REFERENCE NUMBER	DESCRIPTION	JEDEC NO. OR MFR. PART NO.
	1374178-02		SYNC GENERATOR LOGIC MODULE ASSEMBLY, PAL/SECAM, PAL-M	
2	1373285-29		OVERLAY	
3	1373272-01		SHIELD, PWB	
4	1373273-01		HANDLE, MODULE	
5	1373227-01		CONTACT, GND	
6	471-325		SCREW, MACH, FLAT HD, NO. 4-40 X 0.188 LG	
7	473-325		SCREW, MACH, PAN HD, XREC, NO. 4-40 X 0.325 LG	
8	496-004		NUT, KEP, NO. 4	
9	501-169		WASHER, PLAIN, NO. 4	
10	1373255-02		SYNC GENERATOR LOGIC PWA	
				A

SHEET 1 OF 1

ITEM NO.	AMPEX PART NO.	REFERENCE NUMBER	DESCRIPTION	JEDEC NO. OR MFR. PART NO.
	1373255-02		SYNC GENERATOR LOGIC PWA, BD NO. 29, PAL/SECAM, PAL-M	
3	1373257		SCHEMATIC	
8	013-650	CR1-11	DIODE	1N270
10	030-057	C1,3,7,8,10,17-19	CAPACITOR, CER, DISC, 100V, 0.01 UF, 20%	
11	034-181	C5	CAPACITOR, MICA, 47 PF, 500V, 5%	
12	034-153	C12-15	CAPACITOR, MICA, 1000 PF, 500V, 5%	
13	035-816	C6	CAPACITOR, MYLAR, 0.018 UF, 50V, 5%	
14	037-186	C16	CAPACITOR, TANT, 120 UF, 10V, 10%	
15	055-166	C2,4,9,11	CAPACITOR, MYLAR, 0.001 UF, 50V, 5%	
19	041-427	R1,2,4,12,17,19	RESISTOR, COMP, 330 OHM, 1/4W, 5%	
20	041-560	R3,5-7,11,13-15	RESISTOR, COMP, 2000 OHM, 1/4W, 5%	
21	041-651	R16,18	RESISTOR, COMP, 33 OHM, 1/4W, 5%	
22	041-410	R8	RESISTOR, COMP, 1K, 1/4W, 5%	
23	041-504	R9,10	RESISTOR, COMP, 510 OHM, 1/4W, 5%	
24	143-981		JACK, CLOSED ENTRY, REF: J1-5	
25	471-325		SCREW, FLAT HD, NO. 4-40 X 0.187	
29	602-012		PLUG, SHORTING, REF: J1-5	
33	586-167	A33,36,37	INTEGRATED CIRCUIT	SN74H10N
35	586-302	A13	INTEGRATED CIRCUIT	F9309DC
36	586-327	A24	INTEGRATED CIRCUIT	SN74H11N
37	586-519	A18	INTEGRATED CIRCUIT	F9322DC
38	586-688	A5	INTEGRATED CIRCUIT	SN74H04N
39	586-689	A23	INTEGRATED CIRCUIT	MC3002P
40	586-700	A12,38,40	INTEGRATED CIRCUIT	SN74H74N
41	586-721	A6,7	INTEGRATED CIRCUIT	SN74H73N
42	586-799	A22	INTEGRATED CIRCUIT	SN74192N
43	586-800	A4,15,21,29	INTEGRATED CIRCUIT	SN74193N
44	586-912	A3,17	INTEGRATED CIRCUIT	SN74154N
45	586-927	A19,20	INTEGRATED CIRCUIT	N8263N
46	586-166	A26	INTEGRATED CIRCUIT	SN74H30N
47	586-926	A16,28,35	INTEGRATED CIRCUIT	SN74H05N
48	587-031	A8	INTEGRATED CIRCUIT	MC3003P
49	586-168	A1,2,9-11,14,25, 27,30-32,34,39,41	INTEGRATED CIRCUIT	SN74H00N
				E

SHEET 1 OF 1

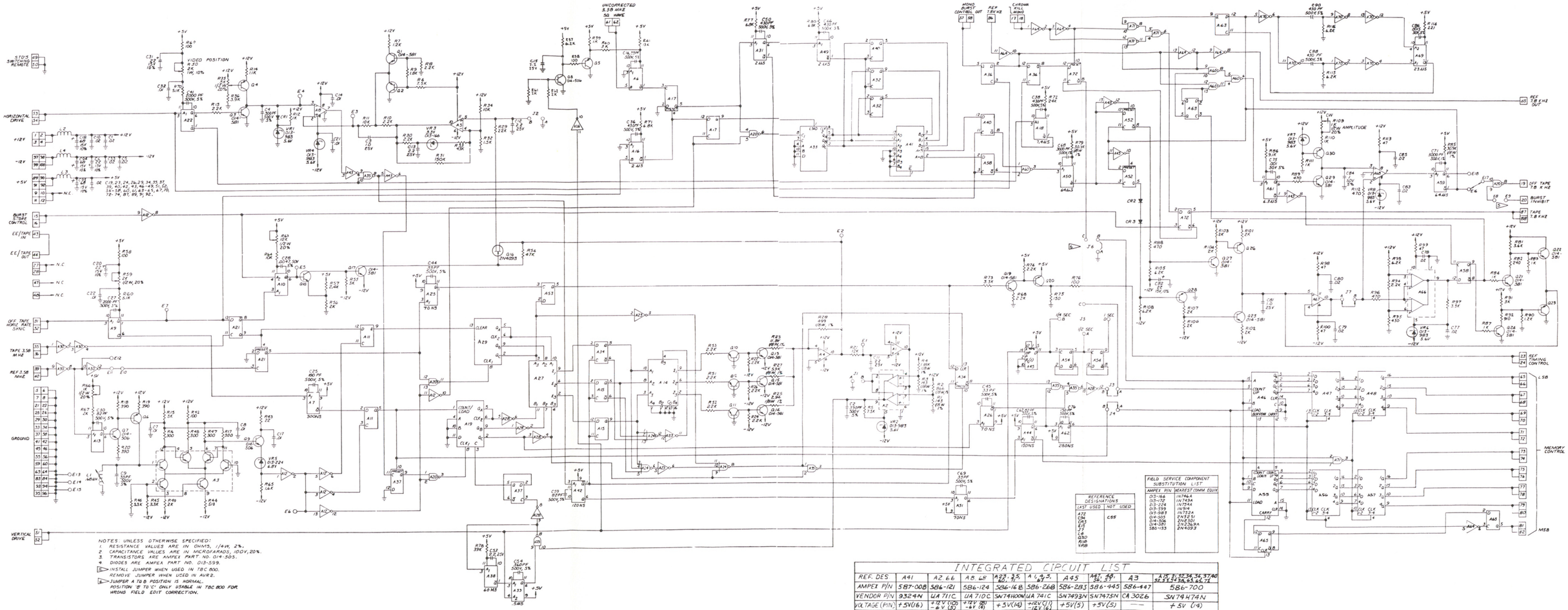

INTEGRATED CIRCUIT LIST

REF. DES.	A41	A2, 6	A8, 68	A23, 35, 50, 51	A 4, 43, 67	A45	A47, 48, 58, 59	A3	A15, 31, 32, 34, 36, 37, 40, 42, 44, 49, 50, 51, 54, 61, 62, 64, 74
AMPEX P/N	587-008	586-121	586-124	586-168	586-268	586-283	586-445	586-447	586-700
VENDOR P/N	9324N	UA 711C	UA 710C	SN74H00N	UA 741C	SN7493N	SN7475N	CA 3026	SN74H74N
VOLTAGE (PIN)	+5V(16)	+12V (8) -6V (5)	+12V (8) -6V (4)	+5V(14)	+12V (7) -12V (4)	+5V(5)	+5V(5)	—	+5V (14)
GROUND (PIN)	8	1	1	7	—	10	12	—	7

REF. DES.	A29, 30, 43, 69, 70	A19, 27	A46, 55	A20	A12	A9, 29, 33	A11, 17	A 24	A1, 5, 10, 13, 16, 18, 22, 25, 26, 38, 39, 42, 44, 45, 53, 57, 61, 63, 67, 71
AMPEX P/N	586-688	586-554	586-800	586-830	586-831	586-870	587-095	586-467	586-533
VENDOR P/N	SN74H74N	SN74983N	SN74193N	SN7450N	SN7450AN	SN74197N	SN7457AN	SN74H10N	SN7412N
VOLTAGE (PIN)	+5V (14)	+5V (14)	+5V (16)	+5V (14)	.5V (14)	+5V (14)	+5V (14)	+5V (14)	+5V (14)
GROUND (PIN)	7	7	8	7	7	7	7	7	7

REFERENCE DESIGNATIONS	
LAST USED	NOT USED
A72	
C94	
CR3	C55
E15	
J7	
Q30	
R198	
VR8	

FIELD SERVICE COMPONENT SUBSTITUTION LIST	
AMPEX P/N	NEAREST COMM EQUIV
013-166	IN746A
013-172	IN749A
013-224	IN754A
013-599	IN914
013-983	IN752A
014-503	2N5251
014-506	2N5501
014-581	2N2369A
586-133	2N4093

Schematic No. 1374096.
Logic PWA, PAL-M, Board No. 28

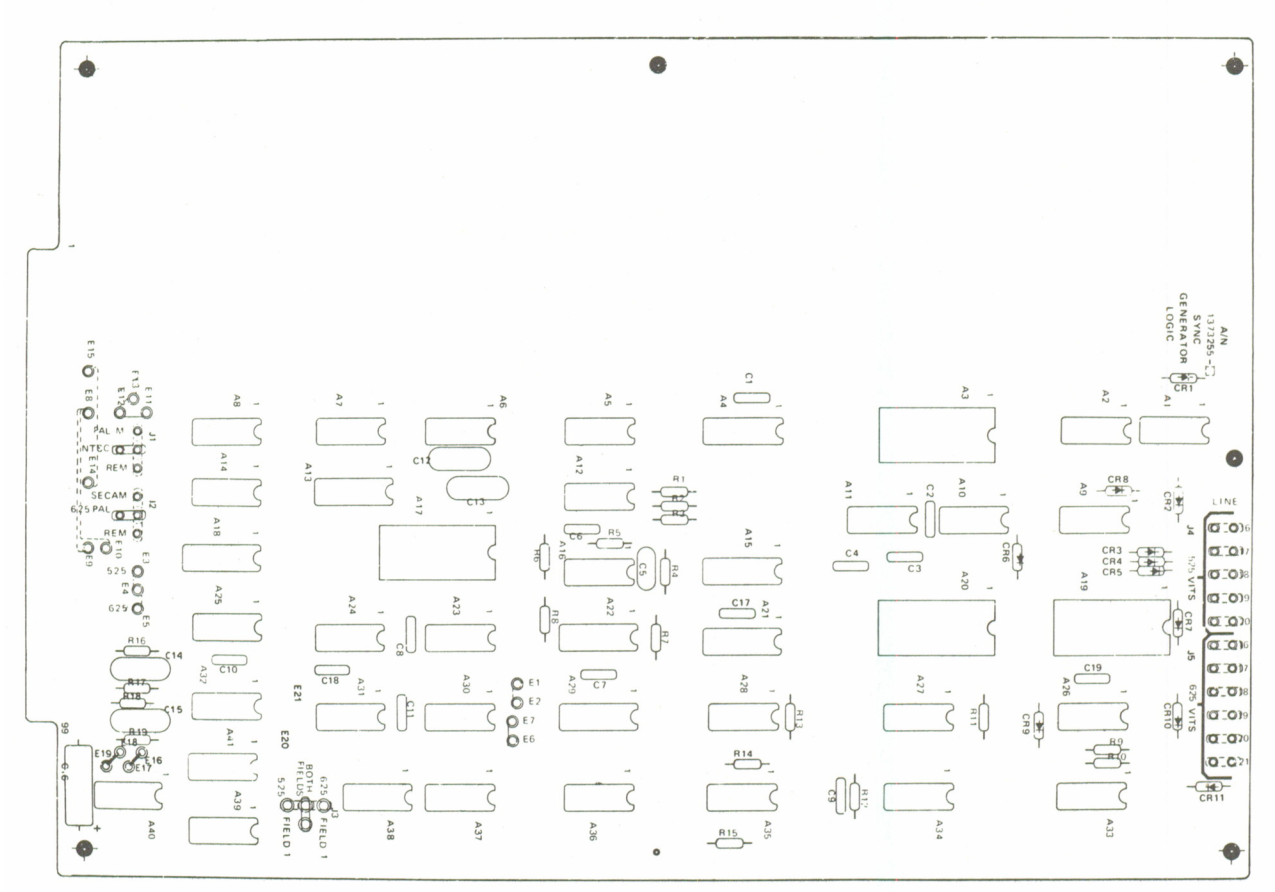

Assembly No. 1373255. Sync Generator Logic PWA, Board No. 29, PAL/PAL-M/SECAM

ITEM NO.	AMPEX PART NO.	REFERENCE NUMBER	DESCRIPTION	JEDEC NO. OR MFR. PART NO.
	1373400-02		SYNC GENERATOR MODULE ASSEMBLY, NTSC	
2	1373285-30		OVERLAY	
3	1373272-01		SHIELD, PWB	
4	1373273-13		HANDLE, MODULE	
5	1373227-01		CONTACT, GND	
6	471-325		SCREW, MACH, FLAT HD, NO. 4-40 X 0.188 LG	
7	473-325		SCREW, MACH, PAN HD, XREC, NO. 4-40 X 0.312 LG	
8	496-004		NUT, KEP, NO. 4	
9	501-169		WASHER, PLAIN, NO. 4	
10	119-259	S1	SWITCH, SPDT, TOGGLE, LEVER LOCK	
11	058-462	R159	RESISTOR, VAR, CARBON, 10K, 1/4W	
12	6000001-20		KNOB, BLK	
14	250-188		BUMPER, PAD	
15	1373083-05		SYNC GENERATOR PWA	
				C

SHEET 1 OF 1

ITEM NO.	AMPEX PART NO.	REFERENCE NUMBER	DESCRIPTION	JEDEC NO. OR MFR. PART NO.
	1373083-05		SYNC GENERATOR PWA, BD NO. 30, NTSC	
4	1373456		SCHEMATIC	
8	1372551-01	T1,3	TRANSFORMER, TOROID	
10	013-650	CR5	DIODE	1N270
11	013-689	CR1-4,6-9,13-14	DIODE	FD600
14	014-247	Q18	TRANSISTOR	2N2219
15	014-364	Q17	TRANSISTOR	2N2905A
16	014-505	Q1,2,3,7,10,13, 21,22	TRANSISTOR	2N3251
18	014-600	Q14,16	TRANSISTOR	2N3912
19	017-141	Y3	CRYSTAL, 3.579545 MHZ, SERIES	
20	017-088	Y2	CRYSTAL, 1.25874 MHZ, SERIES	
22	030-094	C31,57	CAPACITOR, MONO, 1.0 UF, 25V, 20%	
24	014-506	Q4-6,8,9,11,12, 15,19,20,23	TRANSISTOR	2N2501
25	030-057	C14,20,30,36,33, 39,47,49,53,59, 64,69	CAPACITOR, CER, 0.01 UF, 100V, 20%	
26	034-161	C17	CAPACITOR, MICA, 2000 PF, 500V, 5%	
28	034-207	C58	CAPACITOR, MICA, 24 PF, 500V, 5%	
29	034-212	C6	CAPACITOR, MICA, 330 PF, 500V, 5%	
31	034-289	C16,18	CAPACITOR, MICA, 1200 PF, 500V, 5%	
33	034-364	C2	CAPACITOR, MICA, 2500 PF, 500V, 1%	
35	034-388	C9	CAPACITOR, MICA, 3300 PF, 500V, 5%	
36	034-925	C1	CAPACITOR, MICA, 1100 PF, 500V, 5%	
37	034-931	C5	CAPACITOR, MICA, 560 PF, 300V, 5%	
38	034-935	C19,60	CAPACITOR, MICA, 240 PF, 500V, 5%	
39	034-958	C62	CAPACITOR, MICA, 2200 PF, 500V, 5%	
40	034-962	C51	CAPACITOR, MICA, 33 PF, 500V, 5%	
41	034-924	C55	CAPACITOR, MICA, 3000 PF, 500V, 5%	
43	035-734	C8,15,28,40,41, 45,48	CAPACITOR, MYLAR, 0.01 UF, 50V, 5%	
45	035-828	C10,11	CAPACITOR, MYLAR, 0.022 UF, 50V, 5%	
47	069-032	C52	CAPACITOR, MYLAR, 0.56 UF, 50V, 5%	
49	037-186	C32	CAPACITOR, TANT, 120 UF, 10V, 10%	
51	037-363	C50	CAPACITOR, TANT, 330 UF, 6V, 10%	
52	037-736	C3	CAPACITOR, TANT, 22 UF, 35V, 10%	
53	037-746	C21,54	CAPACITOR, TANT, 47 UF, 20V, 10%	
54	035-893	C4,7,13,24,33, 34,37,44,61,66, 67	CAPACITOR, MYLAR, 0.1 UF, 50V, 5%	
55	035-730	C70	CAPACITOR, MYLAR, 0.0047 UF, 50V, 5%	
57	056-086	C56	CAPACITOR, MICA, 7500 PF, 100V, 5%	
				F

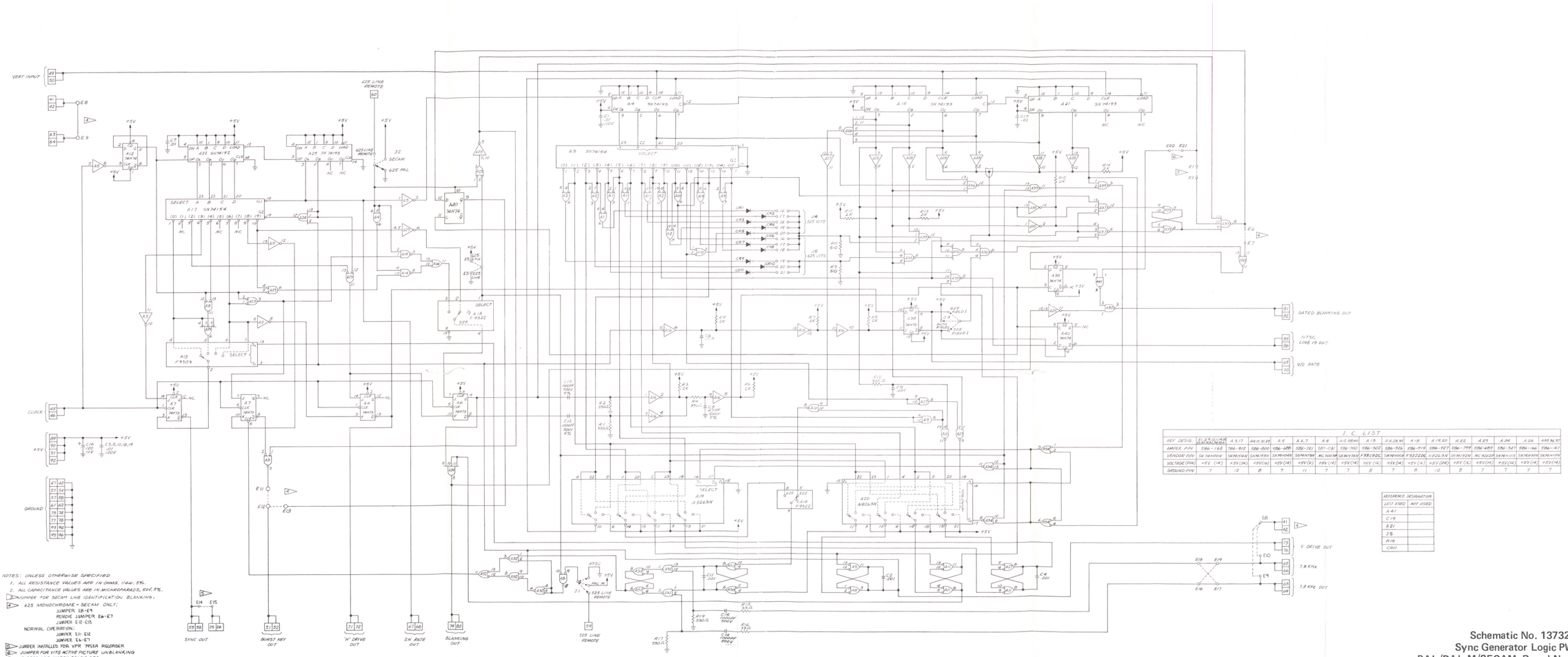

NOTES: UNLESS OTHERWISE SPECIFIED
1. ALL RESISTANCE VALUES ARE IN OHMS, 1/4W, 5%.
2. ALL CAPACITANCE VALUES ARE IN MICROFARADS, 50V, 5%.
[1] = JUMPER FOR SECAM LINE IDENTIFICATION, BLANKING.
[2] = 625 MONOCHROME - SECAM ONLY:
JUMPER E8-E9
REMOVE JUMPER E6-E7
JUMPER E12-E15
NORMAL OPERATION:
JUMPER E11-E12
JUMPER E6-E7
[3] = JUMPER INSTALLED FOR VPR 7951A RECORDER
[4] = JUMPER FOR VITS ACTIVE PICTURE UNBLANKING
7. DIODES ARE AMPEX P/N 015-650.

I. C. LIST

REF. DESIG.	A1,29,31,42 DESIGNATIONS	A3,17	A4,11,21,41	A5	A6,7	A8	A12 9540	A13	A14,28,36	A18	A19,20	A22	A23	A24	A26	A33,34,37
AMPEX P/N	586-168	586-912	586-800	586-608	586-721	587-031	586-760	586-302	586-926	586-519	586-927	586-799	586-689	586-327	586-166	586-167
VENDOR P/N	SN74H00N	SN74S64N	SN74S51N	SN74H08N	SN74H78N	MC 5009P	SN74H74N	P9322DC	SN74H00N	P9322DC	U-A2634	SN74H22N	MC 5022P	SN74H11N	SN74H30N	SN74H10N
VOLTAGE (PIN)	+5V (14)	+5V (14)	+5V (14)	+5V (14)	+5V (14)	+5V (14)	+5V (14)	+5V (14)	+5V (14)	+5V (14)	+5V (24)	+5V (16)	+5V (14)	+5V (14)	+5V (14)	+5V (14)
GROUND PIN	7	12	8	7	11	7	7	8	7	8	12	8	7	7	7	7

REFERENCE DESIGNATION	
LAST USED	NOT USED
A41	
C79	
E21	
J5	
R19	
CR11	

Schematic No. 1373257.
Sync Generator Logic PWA,
PAL/PAL-M/SECAM, Board No. 29

ASSEMBLY NO. 1373083 TITLE SYNC GENERATOR PWA, BD NO. 30, NTSC

ITEM NO.	AMPEX PART NO.	REFERENCE NUMBER	DESCRIPTION	JEDEC NO. OR MFR. PART NO.
59	067-013	C26,46	CAPACITOR, TANT, 20 UF, 20%, 15V, NP	
60	041-014	R18,20,53,69,71, 76,77,96,100, 128,133,147	RESISTOR, COMP, 10K, 1/2W, 5%	
61	041-410	R164,165	RESISTOR, COMP, 1K, 1/4W, 5%	
62	041-520	R160	RESISTOR, COMP, 7.5K, 1/4W, 5%	
63	041-003	R56,78,114, 146,148	RESISTOR, COMP, 100 OHM, 1/2W, 5%	
64	041-006	R13,38,89	RESISTOR, COMP, 620 OHM, 1/2W, 5%	
66	041-008	R45,67,85,86, 123,125	RESISTOR, COMP, 1500 OHM, 1/2W, 5%	
67	041-009	R42,61	RESISTOR, COMP, 1800 OHM, 1/2W, 5%	
71	041-017	R19	RESISTOR, COMP, 33K, 1/2W, 5%	
72	041-329	R161,162	RESISTOR, COMP, 330 OHM, 1/2W, 5%	
73	041-023	R97,136,137,143	RESISTOR, COMP, 100K, 1/2W, 5%	
74	041-027	R129	RESISTOR, COMP, 220K, 1/2W, 5%	
75	041-239	R9,58,60,118, 130,132,149, 157,158	RESISTOR, COMP, 2200 OHM, 1/2W, 5%	
77	041-245	R11,14,70,74,75, 79,80,81,90,99, 104,106,110-113, 120-122,134,135, 138-140	RESISTOR, COMP, 1000 OHM, 1/2W, 5%	
78	041-278	R35,163	RESISTOR, COMP, 2700 OHM, 1/2W, 5%	
79	041-254	R7,32,73,117	RESISTOR, COMP, 15K, 1/2W, 5%	
80	041-256	R5,15	RESISTOR, COMP, 560 OHM, 1/2W, 5%	
81	041-273	R124	RESISTOR, COMP, 270 OHM, 1/2W, 5%	
84	041-455	R155	RESISTOR, COMP, 6200 OHM, 1/2W, 5%	
85	041-286	R47	RESISTOR, COMP, 1M, 1/2W, 5%	
86	041-316	R28,29,34,54	RESISTOR, COMP, 2400 OHM, 1/2W, 5%	
87	041-334	R6,8,46,115	RESISTOR, COMP, 200 OHM, 1/2W, 5%	
88	041-336	R40,52,91	RESISTOR, COMP, 470 OHM, 1/2W, 5%	
89	041-344	R23,65,66,84	RESISTOR, COMP, 390 OHM, 1/2W, 5%	
90	041-345	R62	RESISTOR, COMP, 51 OHM, 1/2W, 5%	
91	041-357	R22,43,50	RESISTOR, COMP, 5600 OHM, 1/2W, 5%	
92	041-283	R17,21,44,48,51, 63,64,82,83, 101-103,105,126, 127	RESISTOR, COMP, 47 OHM, 1/2W, 5%	
93	041-397	R116	RESISTOR, COMP, 10M, 1/2W, 5%	
94	041-398	R57,98,119	RESISTOR, COMP, 2.2M, 1/2W, 5%	
95	041-404	R33,39	RESISTOR, COMP, 510 OHM, 1/2W, 5%	
96	041-421	R109	RESISTOR, COMP, 22 OHM, 1/2W, 5%	
97	041-010	R25,26,59,88,93	RESISTOR, COMP, 2K, 1/2W, 5%	
98	041-461	R55	RESISTOR, COMP, 180 OHM, 1/2W, 5%	
99	041-462	R12,16,41,94,95	RESISTOR, COMP, 1300 OHM, 1/2W, 5%	
100	041-473	R141,142	RESISTOR, COMP, 240 OHM, 1/2W, 5%	

F

ASSEMBLY NO. 1373083 TITLE SYNC GENERATOR PWA, BD NO. 30, NTSC

ITEM NO.	AMPEX PART NO.	REFERENCE NUMBER	DESCRIPTION	JEDEC NO. OR MFR. PART NO.
101	041-500	R24	RESISTOR, COMP, 510 OHM, 1W, 5%	
102	041-525	R156	RESISTOR, COMP, 3600 OHM, 1/2W, 5%	
103	041-528	R92	RESISTOR, COMP, 300 OHM, 1/2W, 5%	
104	041-529	R27,30,31,87	RESISTOR, COMP, 20K, 1/2W, 5%	
105	041-615	R68	RESISTOR, COMP, 4.7M, 1/2W, 5%	
106	041-833	R49	RESISTOR, COMP, 750 OHM, 1W, 5%	
108	044-439	R151	RESISTOR, VAR, WW, 2K, 1W, 5%	
109	048-694	R145,153	RESISTOR, MF, 604 OHM, 1/4W, 1%	
112	048-619	R10,37	RESISTOR, MF, 2490 OHM, 1/4W, 1%	
113	048-256	R152	RESISTOR, MF, 3480 OHM, 1/4W, 1%	
114	048-670	R4	RESISTOR, MF, 237 OHM, 1/4W, 1%	
115	048-819	R3	RESISTOR, MF, 20K, 1/4W, 1%	
116	057-424	R1	RESISTOR, MF, 1820 OHM, 1/4W, 1%	
117	057-426	R72	RESISTOR, MF, 76.8 OHM, 1/4W, 1%	
118	143-981		JACK, CLOSED ENTRY	
119	057-979	R107,108	RESISTOR, MF, 147 OHM, 1/4W, 1%	
121	062-260	R144,154	RESISTOR, MF, 5110 OHM, 1/4W, 1%	
122	062-416	R131	RESISTOR, MF, 40.2K, 1/4W, 1%	
123	057-386	R2	RESISTOR, MF, 30.1K, 1/4W, 1%	
124	062-653	R150	RESISTOR, MF, 15.8K, 1/4W, 1%	
125	062-993	R168	RESISTOR, MF, 15.8K, 1/8W, 1%	
127	150-209		HOLDER, CRYSTAL	
128	051-281	L3	INDUCTOR, FXD, 0.1 UH, 20%	
129	540-004	L1	INDUCTOR, FXD, 33 UH, 5%	
130	540-006	L4	INDUCTOR, FXD, 100 UH, 5%	
133	541-068	L2	INDUCTOR, VAR, 10 UH, 20%	
134	541-077	L5	INDUCTOR, VAR, 33 UH, 20%	
135	051-940	L8	INDUCTOR, VAR, 72-113 UH	
136	051-941	L6	INDUCTOR, VAR, 178-262 UH	
137	051-942	L7	INDUCTOR, VAR, 262-400 UH	
138	030-223	C12,27,73	CAPACITOR, MONO, 2.2 UF, 25V, 20%	
140	560-295	T2	TRANSFORMER	RELCOM BT8
141	581-244	CR10,11	DIODE, VARACTOR	V939EA
142	581-309	CR12	DIODE, VARACTOR	V915EA
143	586-168	A24,25,46	INTEGRATED CIRCUIT	SN74H00N
144	586-124	A11,18,27,35	INTEGRATED CIRCUIT	UA710
146	586-249	A9	INTEGRATED CIRCUIT	CA3028A
147	586-253	A22	INTEGRATED CIRCUIT	CA3006
148	586-255	A8,12,23	INTEGRATED CIRCUIT	CA3019
149	586-261	A4,6,15,21	INTEGRATED CIRCUIT	LM302
150	586-269	A5,17,20,28	INTEGRATED CIRCUIT	UA741
151	586-309	A34	INTEGRATED CIRCUIT	F9601
152	586-325	A43	INTEGRATED CIRCUIT	SN7405N
153	586-335	A3,14,37	INTEGRATED CIRCUIT	LM306
154	586-336	A16	INTEGRATED CIRCUIT	DM8800 F

ASSEMBLY NO. 1373083 TITLE SYNC GENERATOR PWA, BD NO. 30, NTSC

ITEM NO.	AMPEX PART NO.	REFERENCE NUMBER	DESCRIPTION	JEDEC NO. OR MFR. PART NO.
155	586-442	A26	INTEGRATED CIRCUIT	MC858P
156	586-447	A19	INTEGRATED CIRCUIT	CA3026
157	586-488	A36	INTEGRATED CIRCUIT	MC1235L
158	586-517	A48	INTEGRATED CIRCUIT	MC1804P
160	586-700	A30,32,41,42	INTEGRATED CIRCUIT	SN74H74N
161	586-800	A13,47	INTEGRATED CIRCUIT	SN74193N
163	586-257	A44,45	INTEGRATED CIRCUIT	F9301
164	587-294	A31	INTEGRATED CIRCUIT (NATIONAL SEMI)	MM5320
166	586-167	A33,40	INTEGRATED CIRCUIT	SN74H10N
167	602-012		PLUG, SHORTING	
168	586-533	A1,2,7,10,29, 38,39,49,50	INTEGRATED CIRCUIT	SN74121N
169	034-286	C29,43	CAPACITOR, MICA, 200 PF, 500V, 5%	
170	037-740	C63,68,72	CAPACITOR, TANT, 33 UF, 10V, 10%	
171	030-963	C22,23,35,42,71	CAPACITOR, CER, 0.1 UF, 100V, 10%	
172	034-177	C25,65	CAPACITOR, MICA, 100 PF, 500V, 5%	
173	265-059		BUSHING, NYLON	
175	280-130		SPACER, XSTR, T0-18, REF: Q1-16,19-23	
176	280-998		SPACER, XSTR, T0-5, REF: Q17,18	
178	048-618	R36	RESISTOR, MF, 2K, 1/4W, 1%	
182	472-088		SCREW, PAN HD, NO. 2-56 X 3/16	
183	473-312		SCREW, NYLON, NO. 4-40 X 3/8	
184	616-569		CABLE, COAX, 75 OHM	
187	492-066		NUT, HEX, NO. 2-56	
188	492-458		NUT, NYLON, NO. 4-40	
191	502-023		WASHER, INT TOOTH, NO. 2, REF: Y2,3	
192	503-992		WASHER, NYLON, NO. 6, REF: T1,3	
193	932-035		BEAD, FERRITE	
194	501-233		WASHER, FLAT, NO. 2	

F

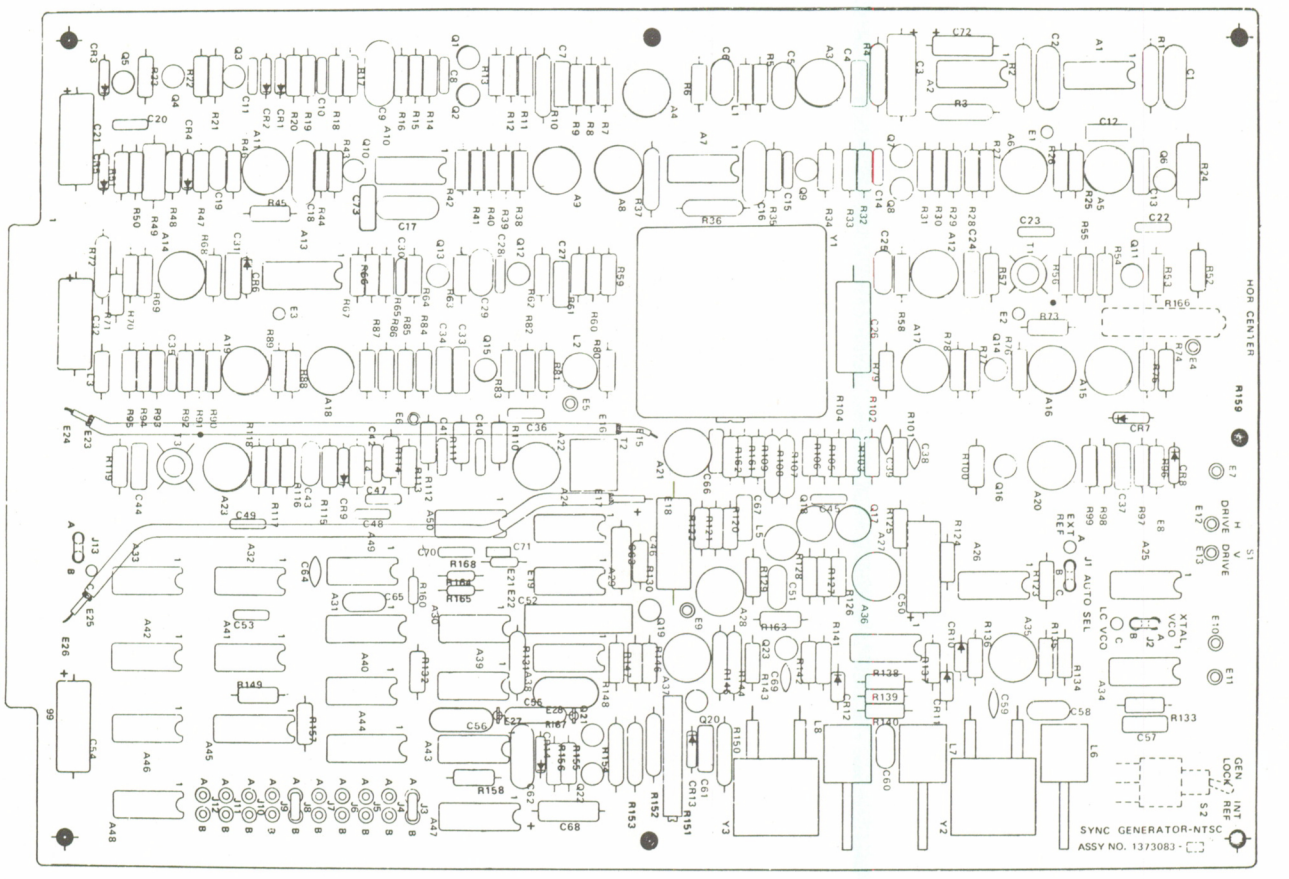

Assembly No. 1373083. Sync Generator PWA, Board No. 30, NTSC

ITEM NO.	AMPEX PART NO.	REFERENCE NUMBER	DESCRIPTION	JEDEC NO. OR MFR. PART NO.
	1374185-03		SYNC GENERATOR MODULE ASSEMBLY, PAL/SECAM	
2	1373285-30		OVERLAY	
3	1373272-01		SHIELD, PWB	
4	1373273-13		HANDLE, MODULE	
5	1373227-01		CONTACT, GND	
6	471-325		SCREW, MACH, FLAT HD, NO. 4-40 X 0.188 LG	
7	473-325		SCREW, MACH, PAN HD, XREC, NO. 4-40 X 0.312 LG	
8	496-004		NUT, KEP, NO. 4	
9	501-169		WASHER, PLAIN, NO. 4	
10	119-259	S1	SWITCH, SPDT, TOGGLE, LEVER LOCK	
11	058-462	R1	RESISTOR, VAR, CARBON, 10K, 1/2W,	
12	6000001-20		KNOB, BLK	
15	250-188		BUMPER, PAD	
16	1373089		SCHEMATIC	
18	1373087-06		SYNC GENERATOR PWA	
				F

SHEET 1 OF 1

ITEM NO.	AMPEX PART NO.	REFERENCE NUMBER	DESCRIPTION	JEDEC NO. OR MFR. PART NO.
	1373087-06		SYNC GENERATOR PWA, BD NO. 30, PAL/SECAM	
3	1373089		SCHEMATIC	
8	1372551-01	T1,2	TRANSFORMER, TOROID	
10	1373291-01	Y3	STANDARD OSCILLATOR, 1.250000 MHZ (ACCESSORY)	
13	472-088		SCREW, PAN HD, NO. 2-56 X 0.187	
14	473-312		SCREW, NYLON, NO. 4-40 X 0.375	
15	034-326	C57,74	CAPACITOR, MICA, 750 PF, 500V, 5%	
17	492-066		NUT, HEX, NO. 2-56	
18	492-458		NUT, HEX, NYLON, NO. 4-40	
19	055-195	C54	CAPACITOR, MYLAR, 0.0068 UF, 50V, 5%	
20	035-730	C104,124	CAPACITOR, MYLAR, 0.0047 UF, 50V, 5%	
21	502-023		WASHER, LOCK, INT TOOTH, NO. 2	
22	503-992		WASHER, NYLON, NO. 6	
23	013-689	CR1-7,17-20	DIODE	FD600
24	581-310	CR14-16	DIODE, VARACTOR, 33 PF, 20%	
25	013-677	CR8-13	DIODE	
27	013-358	VR1,2	DIODE, ZENER	1N751A
29	041-508	R38,261	RESISTOR, COMP, 20K, 1/4W, 5%	
30	586-533	A1,2,5,6,13,36, 39,40	INTEGRATED CIRCUIT	SN74121
31	014-505	Q5,6,8,10,12,13, 14,16,27,32	TRANSISTOR	2N3251
32	014-506	Q1,4,11,15,26,28, 31	TRANSISTOR	2N2501
33	014-581	Q2,3,7,9,17,18, 21-25,29,30	TRANSISTOR	2N2369A
34	014-600	Q19,20	TRANSISTOR	2N3912
35	020-515	K1	RELAY, DPDT, 26.5V	
36	020-407		SPACER, RELAY, REF: K1	
37	017-089	Y2	CRYSTAL, 1.250000 MHZ, SERIES	
38	017-142	Y1	CRYSTAL, 4.433619 MHZ, SERIES	
40	035-817	C123	CAPACITOR, MYLAR, 0.015 UF, 50V, 5%	
41	030-057	C1,18,23,25,26, 37,39,40-42,44, 45,48,52,66,68, 70,81,84,92,94, 97,101,100,116	CAPACITOR, CER, 0.01 UF, 100V, 20%	
43	030-094	C2,43,49	CAPACITOR, MONO, 1 UF, 25V, 20%	
44	034-177	C14,30	CAPACITOR, MICA, 100 PF, 500V, 5%	
46	034-215	C64	CAPACITOR, MICA, 10 PF, 500V, 5%	
47	034-287	C78	CAPACITOR, MICA, 300 PF, 500V, 1%	
48	034-289	C8,16	CAPACITOR, MICA, 1200 PF, 500V, 5%	
49	034-924	C3	CAPACITOR, MICA, 3000 PF, 500V, 5%	
50	034-929	C21	CAPACITOR, MICA, 560 PF, 500V, 5%	
				H

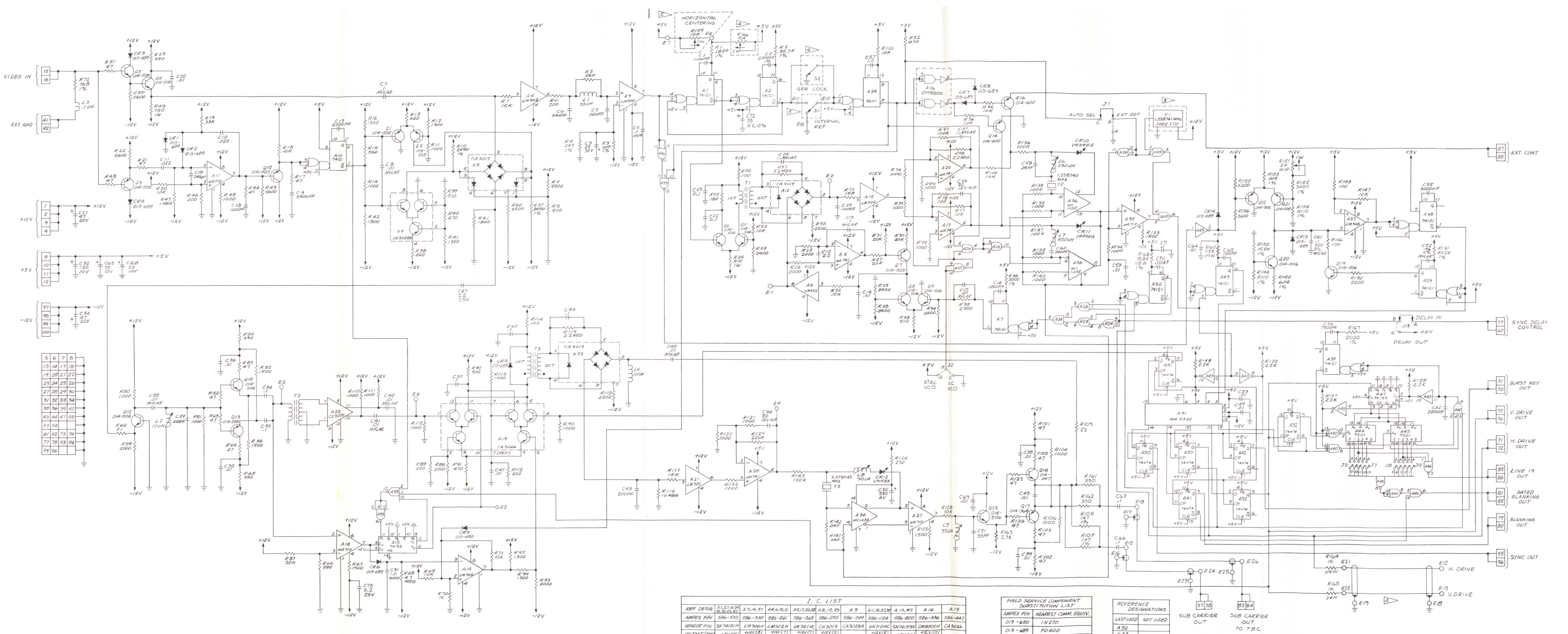

NOTES: UNLESS OTHERWISE SPECIFIED

1. CAPACITANCE VALUES ARE IN MICROFARADS.
2. RESISTANCE VALUES ARE IN OHMS, 1/2W, 5%.
3. ACCESSORY ONLY. SEE FINAL ASSY, 1373000.
4. USED ON ASSEMBLY 1374105 ONLY.
5. USED ON ASSEMBLY 1373400 ONLY.

I. C. LIST

REF DESIG	A1,2,7,10,29 38,39,49,50	A3,14,37	A4,6,15,21	A5,17,20,28	A8,12,23	A9	A11,18,27,35	A13,47	A16	A19
AMPEX P/N	586-533	586-335	586-261	586-269	586-255	586-249	586-124	586-800	586-336	586-447
VENDOR P/N	SN74121N	LM306H	LM302H	UA741HC	CA3019	CA3028A	UA710HC	SN74193N	DM8800H	CA3026
VOLTAGE (PIN)	+5V(14)	+12V(8) -12V(4)	+12V(7) -12V(4)	+12V(7) -12V(4)	+12V(5) -12V(7)		+12V(8)	+5V(16)	+5V(10) +12V(4) -12V(7)	
GROUND PIN	7	1	——	——	1, 4		1	8	3	

REF DESIG	A22	A26	A30,32,41,42	A31	A34	A36	A33,40	A43	A44,45	A48	A24,25, 46
AMPEX P/N	586-253	586-442	586-700	587-294	586-309	586-488	586-167	586-325	586-257	586-517	586-168
VENDOR P/N	CA3006	MC858P	SN74H74N	MM5320N	F9601DC	MC1235L	SN74H10N	SN7405N	F9301DC	MC1804P	SN74H00N
VOLTAGE (PIN)	+12V(9) -12V(8)		+5V(14)		+5V(14)		+5V(14)	+5V(14)		+5V(14)	+5V(14)
GROUND PIN	12		7		7	7	7	7		7	7

FIELD SERVICE COMPONENT SUBSTITUTION LIST

AMPEX P/N	NEAREST COMM. EQUIV.
013-650	1N270
013-689	FD600
014-247	2N2219
014-364	2N2905A
014-505	2N3251
014-506	2N2501
014-600	2N3912

REFERENCE DESIGNATIONS

LAST USED	NOT USED
A50	
C73	
CR14	
E26	E14, 20
J13	
L8	
Q23	
R168	
S2	
T3	
Y3	

Schematic No. 1373456.
Sync Generator PWA, NTSC, Board No. 30

AMPEX 1809178-02

ASSEMBLY NO. 1373087 TITLE SYNC GENERATOR PWA, BD NO. 30, PAL/SECAM

ITEM NO.	AMPEX PART NO.	REFERENCE NUMBER	DESCRIPTION	JEDEC NO. OR MFR. PART NO.
51	034-935	C85	CAPACITOR, MICA, 240 PF, 500V, 5%	
52	034-958	C32	CAPACITOR, MICA, 2200 PF, 500V, 5%	
53	034-161	C17	CAPACITOR, MICA, 2000 PF, 500V, 5%	
54	034-388	C20	CAPACITOR, MICA, 3300 PF, 500V, 5%	
56	034-937	C12,67	CAPACITOR, MICA, 160 PF, 500V, 5%	
59	034-347	C33	CAPACITOR, MICA, 180 PF, 500V, 5%	
61	034-961	C75	CAPACITOR, MICA, 120 PF, 500V, 5%	
62	034-934	C61,125	CAPACITOR, MICA, 360 PF, 500V, 5%	
63	034-180	C102,103	CAPACITOR, MICA, 39 PF, 500V, 5%	
64	035-893	C6,11,31,51,60, 76,87-89	CAPACITOR, MYLAR, 0.1 UF, 50V, 5%	
65	035-734	C46,53	CAPACITOR, MYLAR, 0.01 UF, 50V, 5%	
66	035-828	C13	CAPACITOR, MYLAR, 0.022, 50V, 5%	
69	037-164	C9	CAPACITOR, TANT, 1 UF, 35V, 10%	
70	037-186	C107	CAPACITOR, TANT, 120 UF, 10V, 10%	
71	037-363	C86	CAPACITOR, TANT, 330 UF, 6V, 10%	
72	037-746	C27,108	CAPACITOR, TANT, 47 UF, 20V, 10%	
73	037-957	C91,93	CAPACITOR, TANT, 68 UF, 15V, 20%	
74	037-991	C15,19,29,50,90	CAPACITOR, TANT, 22 UF, 15V, 10%	
75	067-013	C65,69	CAPACITOR, TANT, 20 UF, 15V, 20%, NP	
76	037-367	C114,115	CAPACITOR, TANT, 2.2 UF, 20V, 10%	
77	037-062	C82	CAPACITOR, TANT, 56 UF, 6V, 10%	
78	034-253	C79	CAPACITOR, MICA, 330 PF, 500V, 1%	
79	030-223	C63,109	CAPACITOR, MONO, 2.2 UF, 25V, 20%	
80	041-336	R31	RESISTOR, COMP, 470 OHM, 1/2W, 5%	
81	041-417	R26,74,88,89, 162,259	RESISTOR, COMP, 390 OHM, 1/4W, 5%	
82	041-435	R54	RESISTOR, COMP, 150 OHM, 1/4W, 5%	
83	041-394	R173,178	RESISTOR, COMP, 100K, 1/4W, 5%	
84	041-408	R6,13,22,27,33, 41,99,107,142, 143,147,156-161, 169,172,181	RESISTOR, COMP, 10K, 1/4W, 5%	
85	041-409	R44,52,55,138	RESISTOR, COMP, 15K, 1/4W, 5%	
87	041-415	R146	RESISTOR, COMP, 68K, 1/4W, 5%	
89	041-419	R7,8,67,94,130, 131,220-223,226, 243	RESISTOR, COMP, 100 OHM, 1/4W, 5%	
90	041-425	R35,36,40,62,81, 82,84,85,98,133, 166,224,232,235, 239,240,242	RESISTOR, COMP, 47 OHM, 1/4W, 5%	
94	041-428	R66,153,170,171, 262	RESISTOR, COMP, 470 OHM, 1/4W, 5%	
95	041-434	R100	RESISTOR, COMP, 1.8K, 1/4W, 5%	
96	041-436	R56,57,112	RESISTOR, COMP, 18K, 1/4W, 5%	
				H

ITEM NO.	AMPEX PART NO.	REFERENCE NUMBER	DESCRIPTION	JEDEC NO. OR MFR. PART NO.
97	041-440	R218	RESISTOR, COMP, 1.2K, 1/4W, 5%	
98	041-442	R50,118	RESISTOR, COMP, 2.7K, 1/4W, 5%	
99	041-484	R136,148	RESISTOR, COMP, 120K, 1/4W, 5%	
100	041-504	R16,60,116,152	RESISTOR, COMP, 510 OHM, 1/4W, 5%	
101	041-505	R70,93,154,249	RESISTOR, COMP, 620 OHM, 1/4W, 5%	
103	041-538	R19	RESISTOR, COMP, 6.2K, 1/4W, 5%	
104	041-550	R46,48,49,51, 113,140,141,150	RESISTOR, COMP, 3K, 1/4W, 5%	
107	041-568	R128,149	RESISTOR, COMP, 4.7M, 1/4W, 5%	
108	041-569	R72	RESISTOR, COMP, 300 OHM, 1/4W, 5%	
109	041-570	R12,114,115,117	RESISTOR, COMP, 2.4K, 1/4W, 5%	
110	041-571	R20	RESISTOR, COMP, 3.6K, 1/4W, 5%	
111	041-740	R4,5,42,92,97, 139,229,241	RESISTOR, COMP, 200 OHM, 1/4W, 5%	
112	041-744	R76,95,103,155, 231	RESISTOR, COMP, 1.3K, 1/4W, 5%	
114	041-973	R65,129,132	RESISTOR, COMP, 1.1K, 1/4W, 5%	
115	041-502	R39,120	RESISTOR, COMP, 240 OHM, 1/4W, 5%	
116	041-414	R64,86	RESISTOR, COMP, 2.2K, 1/4W, 5%	
118	041-497	R102,127,134	RESISTOR, COMP, 560 OHM, 1/4W, 5%	
120	041-554	R87,110	RESISTOR, COMP, 51 OHM, 1/4W, 5%	
121	041-410	R25,47,71,77,78, 90,96,101,105, 109,111,125,126, 151,174-177,180, 263	RESISTOR, COMP, 1K, 1/4W, 5%	
122	041-411	R190	RESISTOR, COMP, 47K, 1/4W, 5%	
123	041-753	R121,191	RESISTOR, COMP, 62K, 1/4W, 5%	
124	041-507	R37	RESISTOR, COMP, 5.6K, 1/4W, 5%	
125	041-418	R63	RESISTOR, COMP, 22 OHM, 1/4W, 5%	
126	041-518	R30	RESISTOR, COMP, 33K, 1/4W, 5%	
127	041-751	R58	RESISTOR, COMP, 36K, 1/4W, 5%	
128	041-412	R167,248	RESISTOR, COMP, 4.7K, 1/4W, 5%	
129	041-429	R145	RESISTOR, COMP, 680 OHM, 1/4W, 5%	
130	041-426	R227,244	RESISTOR, COMP, 68 OHM, 1/4W, 5%	
131	062-993	R11	RESISTOR, MF, 15.8K, 1/8W, 1%	
134	058-651	R228,251,255, 257	RESISTOR, VAR, 2K, 1/2W, 10%	
135	041-500	R14	RESISTOR, COMP, 510 OHM, 1W, 5%	
137	062-934	R212	RESISTOR, MF, 1.62K, 1/8W, 1%	
138	062-624	R200-202,204, 207,208,210,211	RESISTOR, MF, 1K, 1/8W, 1%	
139	062-836	R104,203,209	RESISTOR, MF, 75 OHM, 1/8W, 1%	
140	062-885	R215-217,219	RESISTOR, MF, 309 OHM, 1/8W, 1%	
				H

ASSEMBLY NO. 1373087 TITLE SYNC GENERATOR PWA, BD NO. 30, PAL/SECAM

ITEM NO.	AMPEX PART NO.	REFERENCE NUMBER	DESCRIPTION	JEDEC NO. OR MFR. PART NO.
141	062-887	R164,165	RESISTOR, MF, 332 OHM, 1/8W, 1%	
142	062-908	R10,18	RESISTOR, MF, 604 OHM, 1/8W, 1%	
143	066-656	R250,252,254, 256	RESISTOR, MF, 30.1K, 1/8W, 1%	
144	062-969	R9,15,192,206	RESISTOR, MF, 5.11K, 1/8W, 1%	
146	062-947	R43,79	RESISTOR, MF, 2.49K, 1/8W, 1%	
147	066-001	R2	RESISTOR, MF, 22.6K, 1/8W, 1%	
148	066-389	R189	RESISTOR, MF, 90.9K, 1/8W, 1%	
149	062-937	R21	RESISTOR, MF, 1.82K, 1/8W, 1%	
150	066-881	R182,184,185	RESISTOR, MF, 63.4K, 1/8W, 1%	
151	066-875	R183,186	RESISTOR, MF, 127K, 1/8W, 1%	
152	062-639	R188,253	RESISTOR, MF, 3.01K, 1/8W, 1%	
153	066-923	R187	RESISTOR, MF, 750K, 1/8W, 1%	
154	062-916	R193,194,196, 197,199,205	RESISTOR, MF, 750 OHM, 1/8W, 1%	
155	062-863	R234,237	RESISTOR, MF, 147 OHM, 1/8W, 1%	
156	062-963	R17	RESISTOR, MF, 4.32K, 1/8W, 1%	
157	062-847	R195,198	RESISTOR, MF, 100 OHM, 1/8W, 1%	
158	051-281	L5	INDUCTOR, FXD, 0.1 UH, 20%	
159	540-004	L1,11,13	INDUCTOR, FXD, 33 UH, 5%	
160	540-006	L7	INDUCTOR, FXD, 100 UH, 5%	
161	540-007	L6	INDUCTOR, FXD, 470 UH, 5%	
162	540-070	L3	INDUCTOR, FXD, 4.7 UH, 5%	
163	051-939	L8	INDUCTOR, VAR, 21–26 UH	
164	051-942	L9	INDUCTOR, VAR, 262–400 UH	
165	051-943	L10	INDUCTOR, VAR, 400–625 UH	
166	541-068	L2,4,14	INDUCTOR, VAR, 10 UH, 20%	
167	541-077	L12	INDUCTOR, VAR, 33 UH, 20%	
168	041-560	R3,32,54,59,61, 68,69,73,75,91, 246,260	RESISTOR, COMP, 2K, 1/4W, 5%	
170	586-124	A10,11,21,31,41, 45	INTEGRATED CIRCUIT	UA710
172	586-255	A15,18,30	INTEGRATED CIRCUIT	CA3019
173	586-261	A14,17,19,32,49	INTEGRATED CIRCUIT	LM302
174	586-269	A25,26,27,29, 33,48,50	INTEGRATED CIRCUIT	UA741
175	586-276	A16	INTEGRATED CIRCUIT	CA3046
176	586-309	A8	INTEGRATED CIRCUIT	F9601
177	586-335	A3,12,34	INTEGRATED CIRCUIT	LM306
178	586-336	A35	INTEGRATED CIRCUIT	DM8800
179	586-253	A23	INTEGRATED CIRCUIT	CA3006
180	586-447	A22	INTEGRATED CIRCUIT	CA3026
182	586-644	A51,52	INTEGRATED CIRCUIT	MC1596G
183	586-488	A42,46,53,54	INTEGRATED CIRCUIT	MC1235
184	586-688	A43	INTEGRATED CIRCUIT	SN74H04N
				H

ASSEMBLY NO. 1373087 TITLE SYNC GENERATOR PWA, BD NO. 30, PAL/SECAM

ITEM NO.	AMPEX PART NO.	REFERENCE NUMBER	DESCRIPTION	JEDEC NO. OR MFR. PART NO.
185	586-721	A37	INTEGRATED CIRCUIT	SN74H73N
186	586-800	A4	INTEGRATED CIRCUIT	SN74193
187	586-249	A24	INTEGRATED CIRCUIT	CA3028
188	586-685	A44	INTEGRATED CIRCUIT	74H01
189	586-926	A9	INTEGRATED CIRCUIT	74H05
191	586-167	A7	INTEGRATED CIRCUIT	SN74H10
192	586-168	A20,28,38,47	INTEGRATED CIRCUIT	SN74H00N
193	560-295	T3	TRANSFORMER	RELCOM BT8
194	041-469	R123	RESISTOR, COMP, 330K, 1/4W, 5%	
195	041-407	R122	RESISTOR, COMP, 3.3K, 1/4W, 5%	
197	143-981		JACK, CLOSED ENTRY, REF: J1-4	
198	150-209		HOLDER, CRYSTAL, REF: Y1,2	
199	265-059		BUSHING, NYLON	
200	280-130		SPACER, XSTR, T0-18, REF: Q1-32	
201	030-963	C4,5,7,10,24,28, 35,36,38,47,55, 56,62,73,77,83, 95,96,98,99,105, 106,111-113, 117-122	CAPACITOR, CER, 0.1 UF, 100V, 10%	
203	034-212	C22,126	CAPACITOR, MICA, 330 UF, 500V, 5%	
205	602-012		PLUG, SHORTING, REF: J1-4	
206	932-035	FB8	BEAD, FERRITE, 1/8 IN	
208	932-034	FB1-7	BEAD, FERRITE, 1/4 IN	
211	041-393	R29,108,124, 135,144	RESISTOR, COMP, 1M, 1/4W, 5%	
212	041-560	R3,32,54,59,61, 68,69,73,75,91, 246,264,265	RESISTOR, COMP, 2K, 1/4W, 5%	
214	041-430	R23,28,45,80, 83,119,137,168, 179,213,214,225, 230,233,236,238, 245	RESISTOR, COMP, 1.5K, 1/4W, 5%	
216	041-440	R24,218	RESISTOR, COMP, 1.2K, 1/4W, 5%	
217	041-778	R53	RESISTOR, COMP, 2.2M, 1/4W, 5%	
218	034-212	C22	CAPACITOR, MICA, 330 PF, 500V, 5%	
219	034-319	C58,59,71,126	CAPACITOR, MICA, 270 PF, 500V, 5%	
220	041-393	R29,108,124, 135,144	RESISTOR, COMP, 1M, 1/4W, 5%	
221	066-061	R258	RESISTOR, MF, 13K, 1/4W, 1%	
222	034-965	C34	CAPACITOR, MICA, 250 PF, 500V, 5%	
223	058-540	R266	RESISTOR, VAR, 5K, 1/2W, 10%	
225	034-208	C80,110	CAPACITOR, MICA, 30 PF, 500V, 5%	
226	034-181	C72	CAPACITOR, MICA, 47 PF, 500V, 5%	
228	041-432	R135	RESISTOR, COMP, 0.22M, 1/4W, 5%	
				H

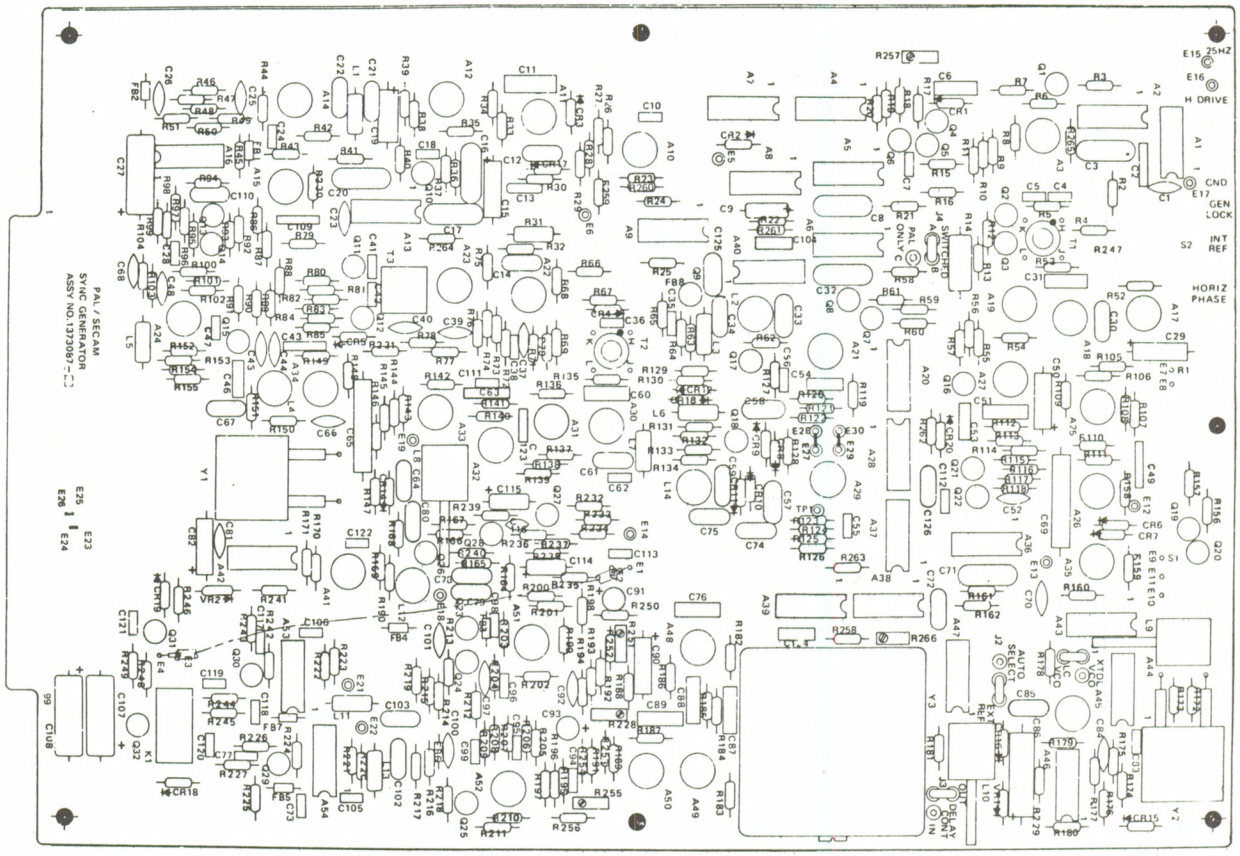

Assembly No. 1373087. Sync Generator PWA, Board No. 30, PAL/SECAM

ITEM NO.	AMPEX PART NO.	REFERENCE NUMBER	DESCRIPTION	JEDEC NO. OR MFR. PART NO.
	1374186-01		SYNC GENERATOR MODULE ASSEMBLY, PAL-M	
1	1373091-01		SYNC GENERATOR PWA	
2	1373285-30		OVERLAY	
3	1373272-01		SHIELD, PWB	
4	1373273-10		HANDLE, MODULE	
5	1373227-01		CONTACT, GND	
6	471-325		SCREW, MACH, FLAT HD, NO. 4-40 X 0.188 LG	
7	473-325		SCREW, MACH, PAN HD, XREC, NO. 4-40 X 0.312 LG	
8	496-004		NUT, KEP, NO. 4	
9	501-169		WASHER, PLAIN, NO. 4	
10	119-259	S1	SWITCH, SPDT, TOGGLE, LEVER LOCK	
11	058-462	R159	RESISTOR, VAR, CARBON, 10K, 1/2W	
12	600000-20		KNOB, BLK	
				—

SHEET 1 OF 1

ITEM NO.	AMPEX PART NO.	REFERENCE NUMBER	DESCRIPTION	JEDEC NO. OR MFR. PART NO.
	1373091-01		SYNC GENERATOR PWA, BD NO. 30, PAL-M	
2	1373093		SCHEMATIC	
4	1375328-01		SHIELD, INDUCTOR, REF: L8,9	
9	1372551-01	T1,3	TRANSFORMER, TOROID	
13	013-358	VR1,2	DIODE, ZENER	1N751A
14	013-689	CR1-6,11-13	DIODE	FD600
16	014-247	Q15	TRANSISTOR	2N2219
17	014-364	Q14	TRANSISTOR	2N2905A
18	014-505	Q1,2,4,7,10,18,19	TRANSISTOR	2N3251
19	014-506	Q3,5,6,8,9,12,16, 17,20	TRANSISTOR	2N2501
20	014-600	Q11,13	TRANSISTOR	2N3912
22	017-145	Y4	CRYSTAL, 3.575611 MHZ, SERIES	
23	017-088	Y2	CRYSTAL, 1.258740 MHZ, SERIES	
24	017-141	Y3	CRYSTAL, 3.579545 MHZ, SERIES	
25	034-319	C86	CAPACITOR, MICA, 270 PF, 500V, 5%	
26	030-057	C12,13,17,24-27, 31,35,40,43,44, 49,51,53,55,62, 65,67,69,83,76, 88	CAPACITOR, CER, 0.01 UF, 100V, 20%	
27	030-094	C32,36,63	CAPACITOR, MONO, 1.0 UF, 25V, 20%	
28	064-316	C15,58	CAPACITOR, MONO, 2.2 UF, 25V, 20%	
29	034-161	C20	CAPACITOR, MICA, 2000 PF, 500V, 5%	
31	034-181	C70	CAPACITOR, MICA, 47 PF, 500V, 5%	
32	034-207	C64	CAPACITOR, MICA, 24 PF, 500V, 5%	
33	034-212	C6	CAPACITOR, MICA, 330 PF, 500V, 5%	
34	034-286	C34,29,48	CAPACITOR, MICA, 200 PF, 500V, 5%	
35	034-289	C19,21	CAPACITOR, MICA, 1200 PF, 500V, 1%	
36	034-958	C2	CAPACITOR, MICA, 2200 PF, 500V, 5%	
37	030-963	C41,47,59,78, 79,81	CAPACITOR, CER, 0.1 UF, 100V, 10%	
38	034-388	C9	CAPACITOR, MICA, 3300 PF, 500V, 5%	
40	034-925	C1,72	CAPACITOR, MICA, 1100 PF, 500V, 5%	
41	034-931	C5	CAPACITOR, MICA, 560 PF, 300V, 5%	
42	034-935	C22,66	CAPACITOR, MICA, 240 PF, 500V, 5%	
43	034-962	C61,77	CAPACITOR, MICA, 33 PF, 500V, 5%	
44	035-817	C80	CAPACITOR, MYLAR, 0.015 UF, 50V, 5%	
45	035-734	C8,18,33,45,46, 52,54	CAPACITOR, MYLAR, 0.01 UF, 50V, 5%	
46	035-828	C10,11	CAPACITOR, MYLAR, 0.022 UF, 50V, 5%	
47	035-893	C4,7,16,28,71, 38,39,42,50,84, 87	CAPACITOR, MYLAR, 0.1 UF, 50V, 5%	
48	035-730	C82	CAPACITOR, MYLAR, 0.0047 UF, 50V, 5%	

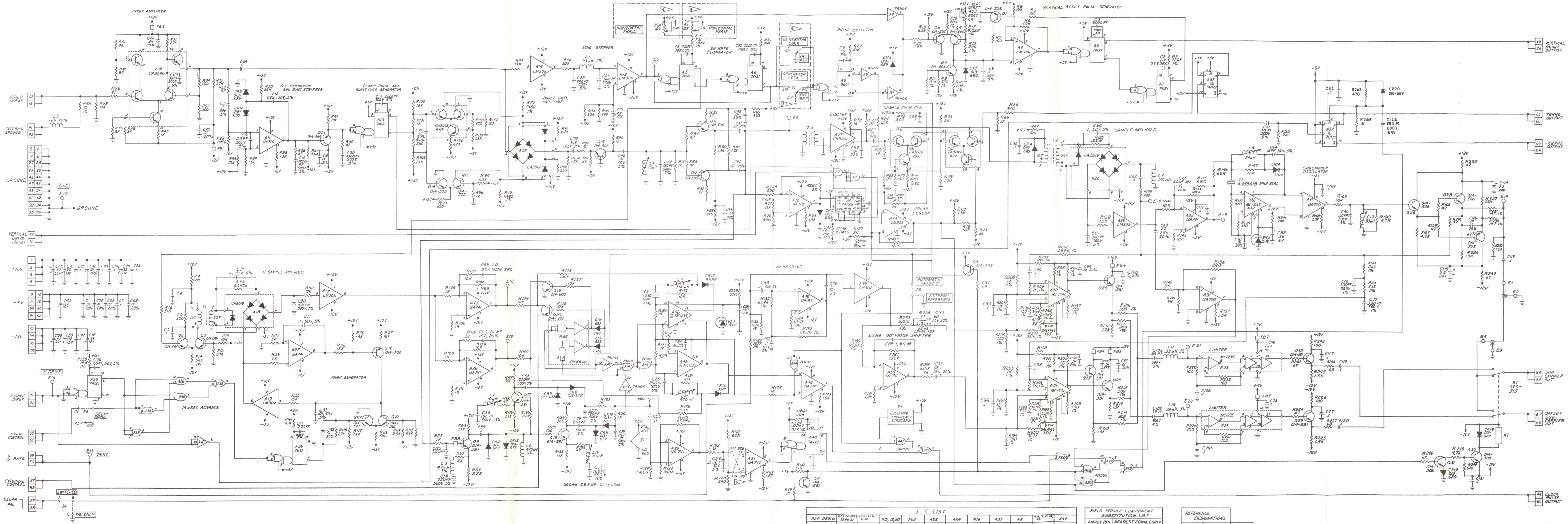

NOTES
UNLESS OTHERWISE SPECIFIED:
1. ALL RESISTORS ARE ¼ W. 5% CARBON
2. ALL CAPACITORS ARE IN MICROFARADS. 100V, 10%
3 USED ON ASSEMBLY 1374185-02 ONLY
4 USED ON ASSEMBLY 1374074-02 ONLY
5 SECAM 7.8 Hz PHASE REVERSAL.
6 SCHEMATIC REFLECTS P.W.B. ISSUE 'H'

I. C. LIST

REF. DESIG	A25, 26, 27, 29, 33, 48, 50	A10, 11, 21, 31, 41, 45	A15, 18, 30	A23	A22	A24	A16	A35	A8	A14, 17, 19, 32, 49	A44
AMPEX P/N	586-269	586-124	586-255	586-253	586-447	586-249	586-276	586-336	586-309	586-261	
VENDOR P/N	UA741	UA710	CA3019	CA3006	CA3026	CA3028	CA3046	DM8800	F9601	LM302	SN74H01
VOLTAGE (PIN)	+12V (7) -12V (4)	+12V (8) -12V (4)	-12V (7)	+12V (9) -12V (8)				+12V (4) -12V (7) +5V (10)	+5V (14)	+12V (7) -12V (4)	+5V (14)
GROUND PIN	3	1		12				3	7		7
REF. DESIG.	A3, 12, 34	A9	A42, 46, 53, 54	A51, 52	A20, 28, 38, 47		A43	A4	A37	A1, 2, 5, 6, 13, 39, 40	A7
AMPEX P/N	586-335		586-488	586-644	586-168		586-688	586-800	586-721	586-533	586-167
VENDOR P/N	LM306	SN74H05	MC1235	MC1596	SN74H00		SN74H04	SN74193	SN74H73	SN74121	SN74H10
VOLTAGE (PIN)	+12V (8) -12V (4)	+5V (14)	+5V (14)	-12V (10)	+5V (14)		(14)	+5V (16)	+5V (4)	+5V (14)	+5V (14)
GROUND PIN	1	7	7		7		7	8	11	7	7

FIELD SERVICE COMPONENT SUBSTITUTION LIST

AMPEX P/N	NEAREST COMM. EQUIV.
013-677	CD517
013-689	FD600
014-247	2N2219
014-505	2N3251
014-506	2N2501
014-581	CD6150
014-600	2N3912
013-358	CD32

REFERENCE DESIGNATIONS

LAST USED	NOT USED	LAST USED
A54		S2
R263		J4
FB8		K1
E30	E20, 23-26	TP1
T3		
Q32		
C126	C123	
L14		
Y3		
VR2		
CR20		

Schematic No. 1373089.
Sync Generator PWA, PAL/SECAM,
Board No. 30

(C)

ASSEMBLY NO. 1373091 TITLE SYNC GENERATOR PWA, BD NO. 30, PAL-M

ITEM NO.	AMPEX PART NO.	REFERENCE NUMBER	DESCRIPTION	JEDEC NO. OR MFR. PART NO.
49	037-186	C37	CAPACITOR, TANT, 120 UF, 10V, 10%	
50	037-363	C60,68	CAPACITOR, TANT, 330 UF, 6V, 10%	
51	037-746	C14,73	CAPACITOR, TANT, 47 UF, 20V, 10%	
52	037-991	C3,23,74	CAPACITOR, TANT, 22 UF, 15V, 10%	
53	037-745	C85	CAPACITOR, TANT, 47 UF, 6V, 10%	
55	041-003	R61,82,119, 160,171	RESISTOR, COMP, 100 OHM, 1/2W, 5%	
56	041-006	R13,35,93	RESISTOR, COMP, 620 OHM, 1/2W, 5%	
57	041-008	R44,72,89,90, 136,143,150	RESISTOR, COMP, 1.5K, 1/2W, 5%	
58	041-009	R39,66	RESISTOR, COMP, 1.8K, 1/2W, 5%	
59	041-010	R22,23,64,92, 97,144,154,181	RESISTOR, COMP, 2K, 1/2W, 5%	
61	041-014	R18,58,80,81, 100,104,140,130 145,158	RESISTOR, COMP, 10K, 1/2W, 5%	
62	041-017	R19	RESISTOR, COMP, 33K, 1/2W, 5%	
63	041-023	R101,148,149, 151,153	RESISTOR, COMP, 100K, 1/2W, 5%	
64	041-027	R141,142	RESISTOR, COMP, 220K, 1/2W, 5%	
65	041-239	R9,63,65,123, 172	RESISTOR, COMP, 2.2K, 1/2W, 5%	
66	041-329	R183,184	RESISTOR, COMP, 330 OHM, 1/2W, 5%	
67	041-245	R11,14,78,79, 83-85,94,103, 105,109,111,115, 116-118,126-128, 132,135,146,147, 152,161-163,165-167,173,186,187	RESISTOR, COMP, 1K, 1/2W, 5%	
68	041-254	R7,29,77,122	RESISTOR, COMP, 15K, 1/2W, 5%	
69	041-256	R5,15	RESISTOR, COMP, 560 OHM, 1/2W, 5%	
70	041-278	R32,182	RESISTOR, COMP, 2.7K, 1/2W, 5%	
71	041-283	R17,41,68,69,86, 87,106-108,110, 138,139	RESISTOR, COMP, 47 OHM, 1/2W, 5%	
72	041-477	R20	RESISTOR, COMP, 13K, 1/2W, 5%	
73	041-286	R43,62,125	RESISTOR, COMP, 1M, 1/2W, 5%	
74	041-316	R25,26,31,59	RESISTOR, COMP, 2.4K, 1/2W, 5%	
75	041-318	R75,134	RESISTOR, COMP, 120K, 1/2W, 5%	
76	041-334	R6,8,42,120, 137,168	RESISTOR, COMP, 200 OHM, 1/2W, 5%	
77	041-336	R37,95,124	RESISTOR, COMP, 470 OHM, 1/2W, 5%	
79	041-344	R70,71,88,170, 192	RESISTOR, COMP, 390 OHM, 1/2W, 5%	
80	041-345	R67	RESISTOR, COMP, 51 OHM, 1/2W, 5%	
81	041-357	R40,164,169	RESISTOR, COMP, 5.6K, 1/2W, 5%	

ASSEMBLY NO. 1373091 TITLE SYNC GENERATOR PWA, BD NO. 30, PAL-M

ITEM NO.	AMPEX PART NO.	REFERENCE NUMBER	DESCRIPTION	JEDEC NO. OR MFR. PART NO.
82	041-397	R121	RESISTOR, COMP, 10M, 1/2W, 5%	
83	041-398	R102	RESISTOR, COMP, 2.2M, 1/2W, 5%	
84	041-404	R30,36	RESISTOR, COMP, 510 OHM, 1/2W, 5%	
86	041-408	R57	RESISTOR, COMP, 10K, 1/4W, 5%	
87	041-428	R194	RESISTOR, COMP, 470 OHM, 1/4W, 5%	
88	041-410	R48,53,196	RESISTOR, COMP, 1K, 1/4W, 5%	
89	041-418	R45	RESISTOR, COMP, 22 OHM, 1/4W, 5%	
90	041-421	R114	RESISTOR, COMP, 22 OHM, 1/2W, 5%	
91	041-425	R46,54,56	RESISTOR, COMP, 47 OHM, 1/4W, 5%	
92	041-407	R52	RESISTOR, COMP, 3.3K, 1/4W, 5%	
94	041-455	R175	RESISTOR, COMP, 6.2K, 1/2W, 5%	
95	041-461	R60	RESISTOR, COMP, 180 OHM, 1/2W, 5%	
96	041-462	R12,16,38,98,99	RESISTOR, COMP, 1.3K, 1/2W, 5%	
97	041-475	R74,131,133, 185,193	RESISTOR, COMP, 3K, 1/2W, 5%	
98	041-500	R21	RESISTOR, COMP, 510 OHM, 1W, 5%	
99	041-379	R129	RESISTOR, COMP, 430 OHM, 1/2W, 5%	
100	041-525	R174	RESISTOR, COMP, 3.6K, 1/2W, 5%	
101	041-528	R96	RESISTOR, COMP, 300 OHM, 1/2W, 5%	
102	041-529	R24,27,28,91	RESISTOR, COMP, 20K, 1/2W, 5%	
103	041-550	R47,49,50,51	RESISTOR, COMP, 3K, 1/4W, 5%	
104	041-615	R73	RESISTOR, COMP, 4.7M, 1/2W, 5%	
106	041-740	R55	RESISTOR, COMP, 200 OHM, 1/4W, 5%	
108	048-618	R33	RESISTOR, MF, 2K, 1/4W, 1%	
109	048-619	R10,34	RESISTOR, MF, 2490 OHM, 1/4W, 1%	
110	048-624	R4	RESISTOR, MF, 182 OHM, 1/4W, 1%	
112	048-694	R176	RESISTOR, MF, 604 OHM, 1/4W, 1%	
113	048-819	R3	RESISTOR, MF, 20K, 1/4W, 1%	
114	048-256	R178	RESISTOR, MF, 3480 OHM, 1/4W, 1%	
115	062-904	R190	RESISTOR, FXD, MF, 511 OHM, 1/8W, 1%	
116	066-061	R189	RESISTOR, FXD, MF, 13K, 1/8W, 1%	
117	062-643	R191,195	RESISTOR, FXD, MF, 2K, 1/8W, 1%	
119	1374188-01	L10-12	INDUCTOR, FILTER	
120	051-281	L2	INDUCTOR, FXD, 0.1 UH, 20%	
121	051-940	L8,9	INDUCTOR, VAR, 72–113 UH	
122	051-941	L6	INDUCTOR, VAR, 178–262 UH	
123	051-942	L7	INDUCTOR, VAR, 262–400 UH	
126	057-424	R1	RESISTOR, MF, 1820 OHM, 1/4W, 1%	
127	057-426	R76	RESISTOR, MF, 76.8 OHM, 1/4W, 1%	
128	057-979	R112,113	RESISTOR, MF, 147 OHM, 1/4W, 1%	
130	062-260	R177	RESISTOR, MF, 5110 OHM, 1/4W, 1%	
131	062-416	R180	RESISTOR, MF, 40.2K, 1/4W, 1%	
133	062-579	R2	RESISTOR, MF, 35.7K, 1/4W, 1%	
134	062-969	R157	RESISTOR, MF, 5.11K, 1/8W, 1%	
135	062-993	R156	RESISTOR, MF, 15.8K, 1/8W, 1%	
136	062-908	R155	RESISTOR, MF, 604 OHM, 1/8W, 1%	
				—

ASSEMBLY NO. 1373091 TITLE SYNC GENERATOR PWA, BD NO. 30, PAL-M

ITEM NO.	AMPEX PART NO.	REFERENCE NUMBER	DESCRIPTION	JEDEC NO. OR MFR. PART NO.
137	067-013	C30,56,57	CAPACITOR, TANT, 20 UF, 15V, NP,20%	
138	069-032	C75	CAPACITOR, MYLAR, 0.56 UF, 50V, 5%	
140	058-540	R197	RESISTOR, VAR, CERMET, 5K, 1/2W, 10%	
141	058-651	R179	RESISTOR, VAR, CERMET, 2K, 1/2W, 10%	
144	143-981		JACK, CLOSED ENTRY	
147	150-209		HOLDER, CRYSTAL, REF: Y2-4	
150	265-059		BUSHING, NYLON	
153	280-130		SPACER, XSTR, T0-18, REF: Q1-13,16-20	
156	280-998		SPACER, XSTR, T0-5, REF: Q14,15	
157	302-395		STRAP, CABLE	
160	472-088		SCREW, PAN HD, NO. 2-56 X 0.187 LG	
161	474-331		SCREW, NYLON, NO. 4-40 X 0.500 LG	
165	492-066		NUT, HEX, NO. 2-56	
166	492-458		NUT, NYLON, NO. 4-40	
171	502-023		WASHER, INT TOOTH, NO. 2	
172	503-992		WASHER, NYLON, NO. 6	
175	540-004	L1	INDUCTOR, FXD, 33 UH, 5%	
176	540-006	L4	INDUCTOR, FXD, 100 UH, 5%	
177	541-068	L3	INDUCTOR, VAR, 10 UH, 20%	
178	541-077	L5	INDUCTOR, VAR, 33 UH, 20%	
181	560-295	T2	TRANSFORMER	RELCOM BT8
184	581-244	CR7,8	DIODE, VARACTOR	
185	581-309	CR9,10	DIODE, VARACTOR	V915EA
188	586-124	A12,19,28,33,35	INTEGRATED CIRCUIT	UA710
189	586-167	A31	INTEGRATED CIRCUIT	SN74H10N
190	586-168	A25,29,39	INTEGRATED CIRCUIT	SN74H00N
196	586-249	A10	INTEGRATED CIRCUIT	CA3028A
197	586-253	A23	INTEGRATED CIRCUIT	CA3006
198	586-255	A9,13,24	INTEGRATED CIRCUIT	CA3019
199	586-261	A4,7,16,22	INTEGRATED CIRCUIT	LM302H
200	586-269	A6,18,21,27,37	INTEGRATED CIRCUIT	UA741
202	586-276	A5	INTEGRATED CIRCUIT	CA3046
203	586-309	A32	INTEGRATED CIRCUIT	F9601
204	586-325	A38,44	INTEGRATED CIRCUIT	SN7405N
205	586-335	A3,15,40	INTEGRATED CIRCUIT	LM306H
206	586-336	A17	INTEGRATED CIRCUIT	DM8800H
208	586-442	A26	INTEGRATED CIRCUIT	MC858P
209	586-447	A20	INTEGRATED CIRCUIT	CA3026
210	586-488	A34,36	INTEGRATED CIRCUIT	MC1235L
211	586-533	A1,2,8,11,30,41,43	INTEGRATED CIRCUIT	SN74121N
212	586-721	A42	INTEGRATED CIRCUIT	SN74H73N
214	586-800	A14	INTEGRATED CIRCUIT	SN74193N
217	602-012	J1-4	PLUG, SHORTING	

SHEET 4 OF 4

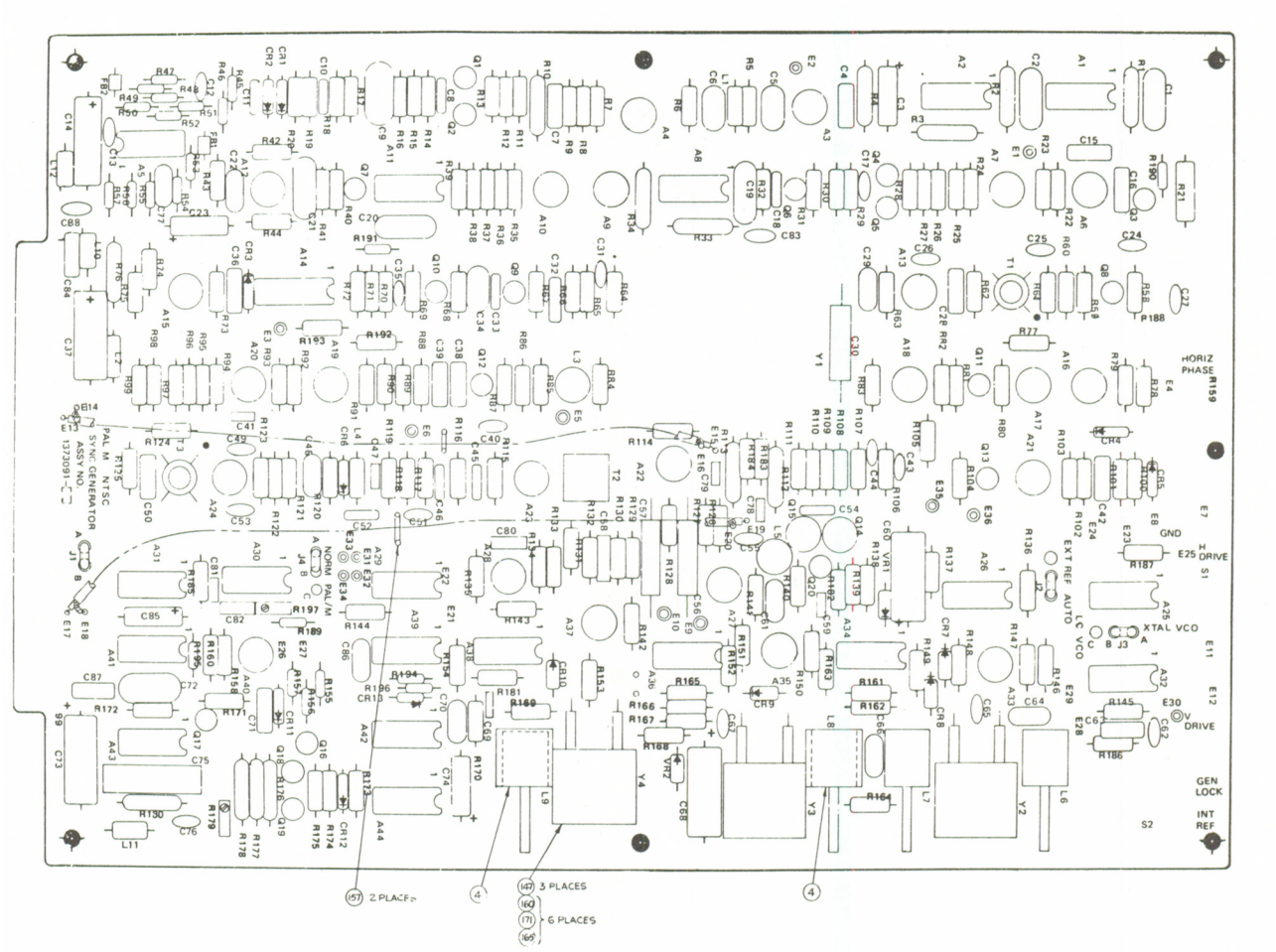

Assembly No. 1373091. Sync Generator PWA, Board No. 30, PAL-M

ITEM NO.	AMPEX PART NO.	REFERENCE NUMBER	DESCRIPTION	JEDEC NO. OR MFR. PART NO.
	1373033-04		MONITOR BRIDGE ASSEMBLY (NHA 1373000)	
1	1373035-02		MONITOR PANEL ASSEMBLY	
4	1373391-01		POWERDUCT, RELAY CONTROL	
6	1373246-01		SPEAKER ENCLOSURE ASSY	
7	497-156		NUT, SH SPR, CLIP "U", NO. 6-32	
8	530-325		ENCLOSURE	
9	473-775		SCREW, MACH, PAN HD, XREC, NO. 6-32 X 0.75 LG, LT GRY	
10	470-089		SCREW, CAP, HEX SOC, NO. 10-32 X 0.50 LG, SST	
11	470-485		SCREW, CAP, BTN HD, HEX SOC, LOCK, NO. 10-32 X 0.38 LG	
12	473-227		SCREW, MACH, BINDER, XREC, NO. 6-32 X 0.312 LG	
13	471-451		SCREW, MACH, PAN HD, XREC, NO. 12-24 X 0.50 LG	
14	501-029		WASHER, PLAIN, NO. 12	
15	502-003		WASHER, LOCK, SPR, NO. 6	
16	502-049		WASHER, LOCK, SPR, NO. 12	
17	496-005		NUT, KEP, NO. 6-32	
18	478-004		SCREW, WOOD, RD HD, NO. 6 X 1/2 LG	
19	476-479		SCREW, WOOD, RD HD, NO. 4 X 3/8 LG	
20	501-692		WASHER, PLAIN, NO. 10, SST	
21	502-011		WASHER, LOCK, SPR, NO. 10, SST	
22	473-774		SCREW, THD FORM, PAN HD, NO. 6-20 X 0.38 LG, LT GRY	
25	020-373		RELAY, 24 VDC COIL, 10A	
30	250-189		BUMPER, RBR	
31	470-028		SCREW, CAP, HEX SOC, NO. 8-32 X 0.44 LG	
32	470-046		SCREW, CAP, HEX SOC, NO. 1/4-20 X 0.62 LG	
33	470-049		SCREW, CAP, HEX SOC, NO. 1/4-20 X 1.00 LG	
34	501-067		WASHER, PLAIN, 1/4	
35	502-004		WASHER, LOCK, SPR, NO. 8	
36	502-006		WASHER, LOCK, SPR, 1/4	
37	501-003		WASHER, PLAIN, NO. 6	
38	471-089		SCREW, PAN HD, NO. 10-32 X 0.50 LG	
39	471-082		SCREW, PAN HD, NO. 8-32 X 0.75 LG	
40	501-205		WASHER, PLAIN, NO. 8	
41	502-005		WASHER, SPR LOCK, NO. 10	
42	501-070		WASHER, PLAIN, NO. 10	
43	471-071		SCREW, PAN HD, NO. 6-32 X 0.50 LG	
44	471-080		SCREW, PAN HD, NO. 8-32 X 0.50 LG	
45	496-006		NUT, KEP, NO. 8-32	
46	473-035		SCREW, OVAL HD, BLK, NO. 12-24 X 0.75 LG	
47	503-309		WASHER, FINISH, BLK, NYLON	
53	1373473-01		CLIP, SPEAKER MT	
54	145-272		TERMINATION, RESISTOR, BNC	
56	1373429-01		CABLE, MONITOR INTERCONNECT	
57	1373429-02		CABLE, MONITOR INTERCONNECT	
58	1373429-03		CABLE, MONITOR INTERCONNECT	
59	1373429-04		CABLE, MONITOR INTERCONNECT	
60	1373429-05		CABLE, MONITOR INTERCONNECT	G

ITEM NO.	AMPEX PART NO.	REFERENCE NUMBER	DESCRIPTION	JEDEC NO. OR MFR. PART NO.
	1373035-02		MONITOR PANEL ASSEMBLY (NHA 1373033)	
3	1373334-01		PANEL, SWITCH, MONITOR	
4	6000006-10		KNOB, INSTRUMENT	
5	1373258-02		MONITOR AMPLIFIER PWA	
6	1373245-02		HARNESS	
7	280-086		SPACER, UNTHD, PLAIN, 0.140 ID, 0.250 OD, 0.25 LG	
9	475-085		SCREW, SEM, NO. 6-32 X 0.312 LG	
11	496-005		NUT, KEP, NO. 6-32	
13	501-009		WASHER, PLAIN, NO. 6	
15	1373322		SCHEMATIC	
				D

SHEET 1 OF 1

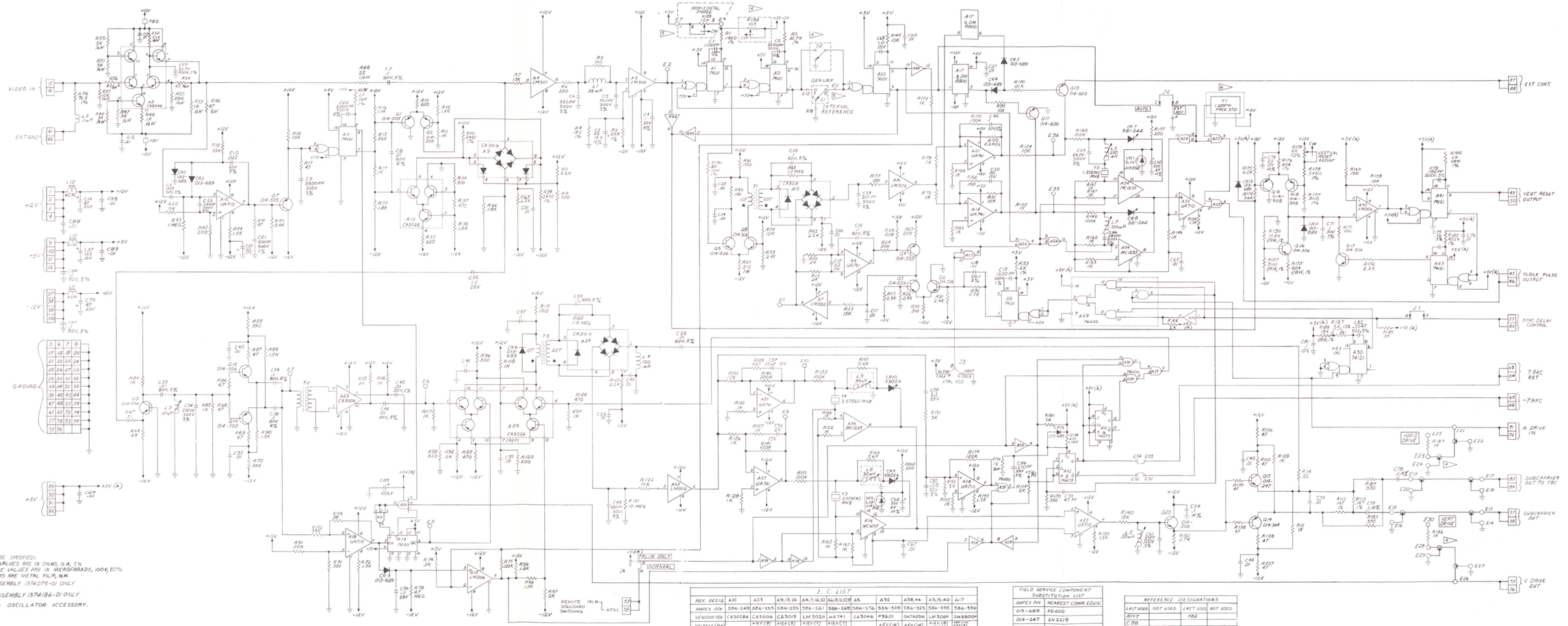

NOTES: UNLESS OTHERWISE SPECIFIED:
1. ALL RESISTANCE VALUES ARE IN OHMS, ¼W, 5%
2. ALL CAPACITANCE VALUES ARE IN MICROFARADS, 100V, 20%
3. ALL 1% RESISTORS ARE METAL FILM, ¼W.

(3) USED ON ASSEMBLY 1374075-01 ONLY.

(5) USED ON ASSEMBLY 1374186-01 ONLY.

(6) STANDARD OSCILLATOR ACCESSORY.

I. C. LIST

REF. DESIG.	A10	A23	A9,13,14	A4,7,9,22	A6,8,11,19	A5	A32	A38,44	A3,15,40	A17
AMPEX P/N	586-249	586-253	586-255	586-261	586-249	586-176	586-309	586-325	586-330	586-536
VENDOR P/N	CA3028A	CA3006	CA3019	LM 502H	μA 741	CA3046	#9601	SN7405N	LM 304H	DM8800H
VOLTAGE (PIN)		+12V(8) -12V(4)	+12V(8) -12V(4)	+12V(7) -12V(4)	+12V(7) -12V(4)		+5V(14)	+5V(14)	+12V(8) -12V(4)	+12V(8) -12V(4)
GROUND PIN		12	1, 4				7	7	1	3

REF. DESIG.	A26	A20	A34,36	A1,2,18,11,20 A16,21	A42	A16	A12,13,33,35	A31	A15,29,33		
AMPEX P/N	586-442	586-447	586-488	586-533	586-721	586-800	586-126	586-167	586-168		
VENDOR P/N	MC8588P	CA3026	MC1355L	SN74123N	SN74H73N	SN74123N	μA 710	SN74H10N	SN74H04N		
VOLTAGE (PIN)	+5V(14)		+5V(14)	+5V(14)	+5V(14)	+5V(14)	+12V(8)	+5V(14)	+5V(14)		
GROUND PIN	7		7	7	11	8	1	7	7		

FIELD SERVICE COMPONENT SUBSTITUTION LIST

AMPEX P/N	NEAREST COMM. EQUIV.
013-689	FD600
014-247	2N2219
014-364	2N3905A
014-505	2N3251
014-506	2N2501
014-600	2N5912

REFERENCE DESIGNATIONS

LAST USED	NOT USED	LAST USED	NOT USED
R117		FB2	
C86			
A44			
Q20			
CR13			
J3			
J8			
VR2			
E36			
E12			
Y4			

Schematic No. 1373093.
Sync Generator PWA, PAL-M,
Board No. 30

ITEM NO.	AMPEX PART NO.	REFERENCE NUMBER	DESCRIPTION	JEDEC NO. OR MFR. PART NO.
	1373258-02		MONITOR AMPLIFIER PWA (NHA 1373035)	
2	1373260		SCHEMATIC	
3	103307-01		SPACER, INSULATED, REF: RL1	
4	1373296-01	RL1	RESISTOR AND INDUCTOR ASSY	
5	1373264-01		BRACKET, RESISTOR	
6	014-802		INSULATOR, MICA, REF: Q1,5	
7	580-656		HEATSINK, REF: Q1,5	UP-T066-B
9	013-678	CR1-6	DIODE	1N4385
10	586-269	A1,2	INTEGRATED CIRCUIT	F741
11	014-248	Q6	TRANSISTOR	2N2222
12	014-387	Q3	TRANSISTOR	2N2907A
13	014-947	Q5	TRANSISTOR	2N3766
14	014-720	Q1	TRANSISTOR	2N3740
15	580-166	Q7,8	TRANSISTOR	2N5322
16	580-167	Q2,4	TRANSISTOR	2N5320
17	034-257	C1	CAPACITOR, MICA, 6800 PF, 500V, 5%	
18	037-164	C2	CAPACITOR, TANT, 1 UF, 35V, 10%	
19	037-991	C5,6,8	CAPACITOR, TANT, 22 UF, 15V, 10%	
20	064-193	C3	CAPACITOR, MONO, CER, 22 UF, 50V, 10%	
21	064-309	C7	CAPACITOR, MONO, CER, 47 UF, 100V, 20%	
22	037-181	C4,9	CAPACITOR, TANT, 47 UF, 35V, 10%	
23	041-239	R5,11	RESISTOR, COMP, 2.2K, 1/2W, 5%	
24	041-029	R13,22	RESISTOR, COMP, 470K, 1/2W, 5%	
25	043-240	R20,21	RESISTOR, PWR, WW, 7.5 OHM, 25W, 3%	
26	041-003	R3,10,18,19	RESISTOR, COMP, 100 OHM, 1/2W, 5%	
27	041-014	R6,12	RESISTOR, COMP, 10K, 1/2W, 5%	
28	041-023	R7,8	RESISTOR, COMP, 100K, 1/2W, 5%	
29	041-245	R15	RESISTOR, COMP, 1K, 1/2W, 5%	
30	041-277	R4	RESISTOR, COMP, 82 OHM, 1/2W, 5%	
31	041-344	R14	RESISTOR, COMP, 390 OHM, 1/2W, 5%	
32	041-455	R17	RESISTOR, COMP, 6.2K, 1/2W, 5%	
33	041-522	R2,9	RESISTOR, COMP, 910 OHM, 1/2W, 5%	
34	041-020	R16	RESISTOR, COMP, 47K, 1/2W, 5%	
36	280-130		SPACER, XSTR, T0-18, REF: Q3,6	
37	280-998		SPACER, XSTR, T0-5, REF: Q2,4,7,8	
40	471-061		SCREW, MACH, NO. 4-40 X 0.312	
41	496-004		NUT, KEP, NO. 4-40	
42	501-008		WASHER, FLAT, NO. 4	
43	492-032		NUT, PLAIN, NO. 4, SM PATT	
44	041-593	R23	RESISTOR, COMP, 110 OHM, 1/2W, 5%	
46	501-729		WASHER, SHOULDER, NYLON	
47	471-063		SCREW, MACH, PAN HD, XREC, NO. 4-40 X 0.438 LG	
49	502-002		WASHER, SPLIT, LOCK	
50	501-169		WASHER, FLAT, NO. 4,SM PATT	
52	013-599	CR7-10	DIODE	1N914
				D

SHEET 1 OF 1

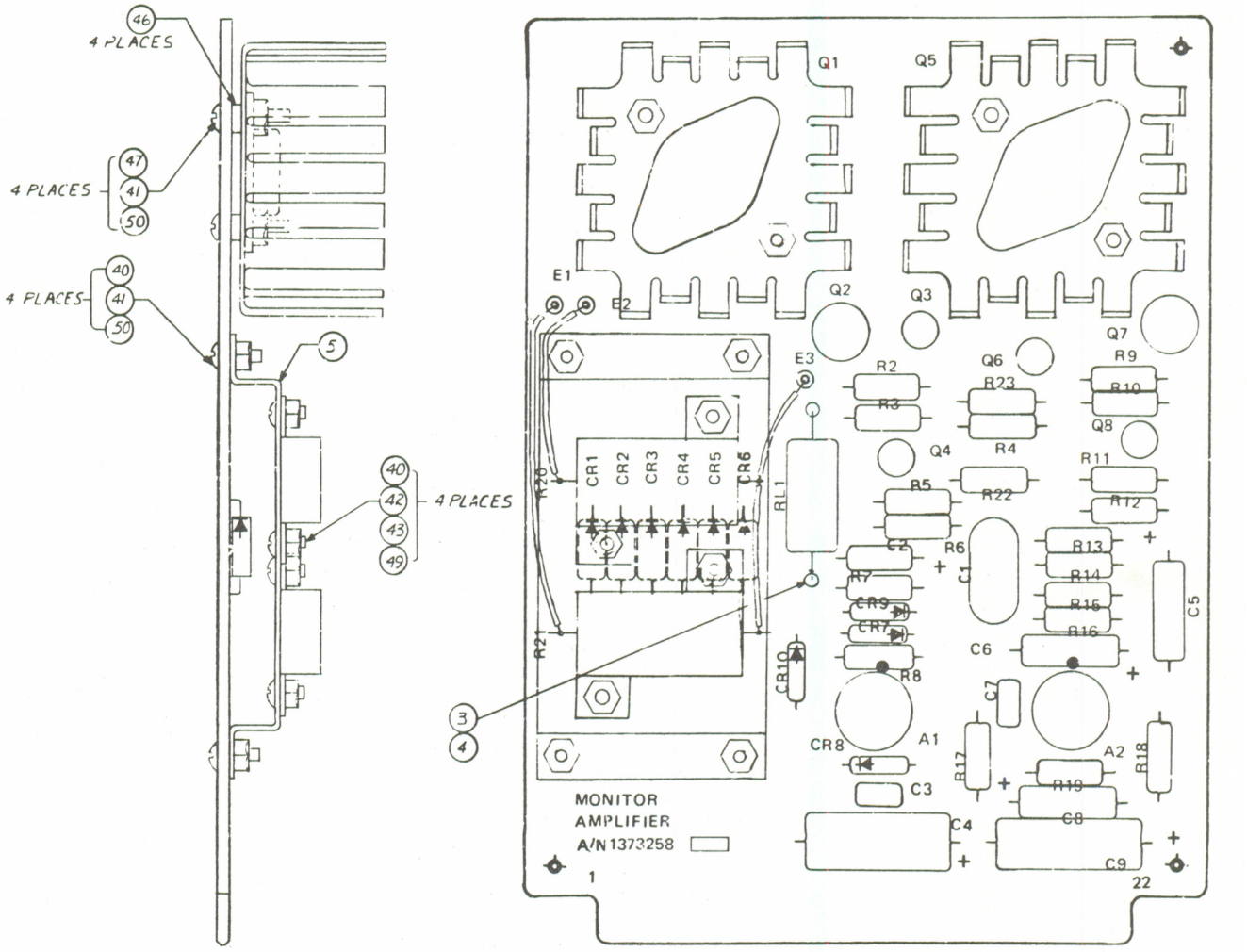

Assembly No. 1373258. Monitor Amplifier PWA

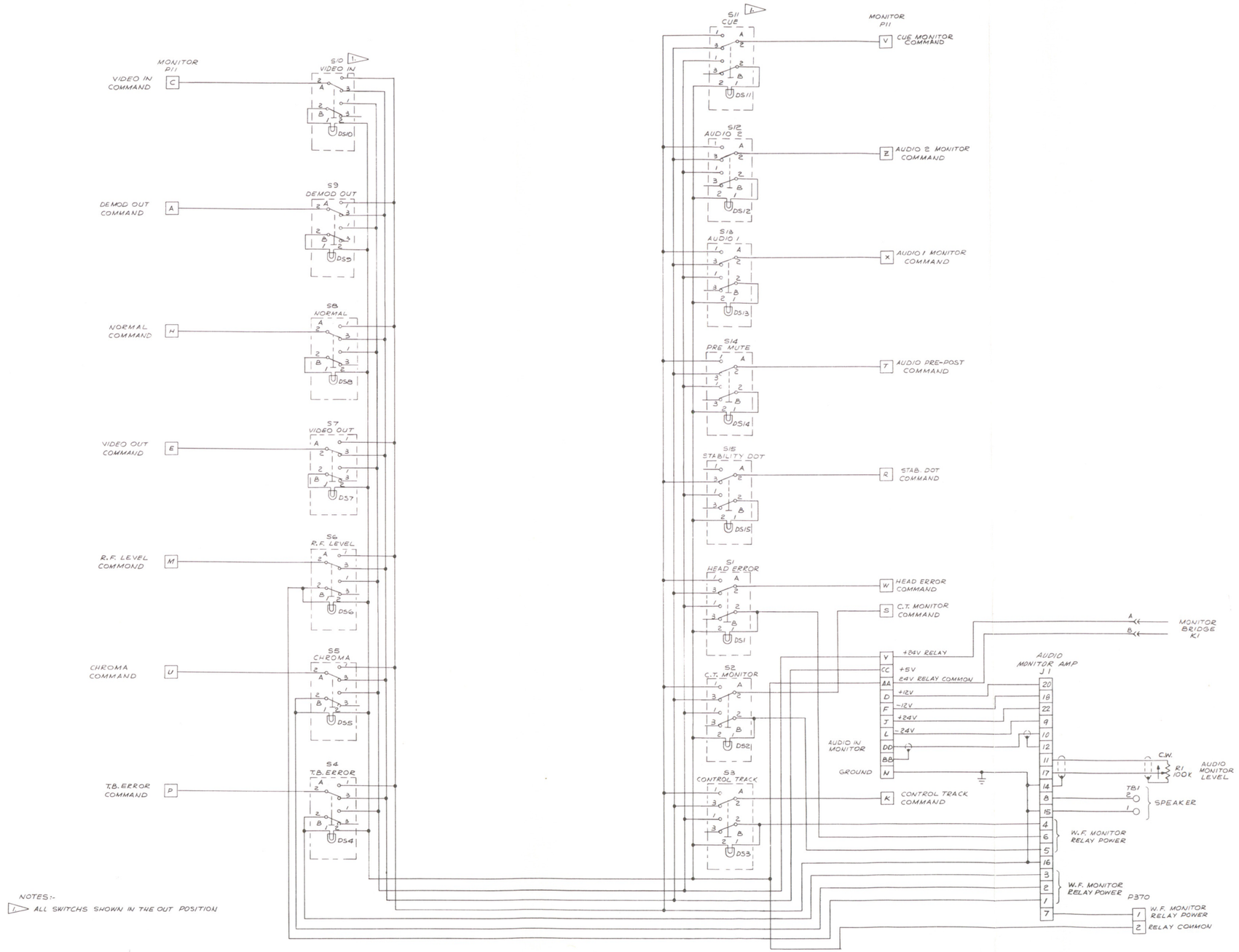

Schematic No. 1373322.
Monitor Panel and Harness Assembly

ITEM NO.	AMPEX PART NO.	REFERENCE NUMBER	DESCRIPTION	JEDEC NO. OR MFR. PART NO.
	1373245-02		MONITOR PANEL HARNESS ASSEMBLY (NHA 1373035)	
1	1373355-01		SUBPANEL, SWITCH MTG	
2	1373356-01		BRACKET, CONN MTG, REF: J1	
3	1373265-01		LENS, PB, VID IN	
4	1373265-02		LENS, PB, DEMOD OUT	
5	1373265-03		LENS, PB, NOR	
6	1373265-04		LENS, PB, VID OUT	
7	1373265-05		LENS, PB, RF LEV	
8	1373265-06		LENS, PB, CHR	
9	1373265-07		LENS, PB, TB ERR	
10	1373265-08		LENS, PB, CON TRK	
11	1373265-09		LENS, PB, CT MON	
12	1373265-10		LENS, PB, HEAD ERR	
13	1373265-11		LENS, PB, STAB DOT	
14	1373265-12		LENS, PB, PRE MUTE	
15	1373265-13		LENS, PB, AUD 1	
16	1373265-14		LENS, PB, AUD 2	
17	1373265-15		LENS, PB, CUE	
19	044-010	R1	RESISTOR, VAR, 100K, 2W	
20	060-391	DS1-15	LAMP, INCAND, 28V	387
23	119-266		SWITCH ASSY, 10 STATION, INTERLOCK	
24	119-268		SWITCH ASSY, 5 STATION, PUSH/PUSH	
25	166-200		CONTACT, PIN, NO. 22-20 AWG, REF: P11	
26	166-227		CONTACT, PIN, NO. 18-16 AWG, REF: P11	
27	166-857	P11	CONNECTOR, 34 CONT	MS34PM880
28	168-086	J1	CONNECTOR, PCB, 22 CONT	
29	171-117		LUG, SPADE	
30	171-009		TERMINAL, KNIFE DISC	
32	473-325		SCREW, ASSY, XREC, PAN HD, NO. 4-40 X 0.312	
33	496-005		NUT, ASSY, NO. 6-32	
34	501-008		WASHER, PLAIN, NO. 4	
36	545-183	P370	CONNECTOR, 9 PIN, CIRCULAR, PLUG	
37	545-184		COVER, CONN, REF: P370	
49	166-226		CONTACT, PIN, NO. 24-26 AWG, REF: P11	
50	471-068		SCREW, MACH, XREC, PAN HD, NO. 6-32 X 0.312	
51	471-072		SCREW, MACH, XREC, PAN HD, NO. 6-32 X 0.62	
52	502-003		WASHER, LOCK, HELICAL, SPR, NO. 6	
55	1373322		SCHEMATIC	
				G

SHEET 1 OF 1

ITEM NO.	AMPEX PART NO.	REFERENCE NUMBER	DESCRIPTION	JEDEC NO. OR MFR. PART NO.
	1373246-01		SPEAKER ENCLOSURE ASSEMBLY (NHA 1373033)	
5	1373392-01		GRILL, SPEAKER	
7	070-047		FUSE, CART, 1.5 AMP, 125V	
8	085-001		FUSEHOLDER	
10	104-026		SPEAKER	405A*
11	172-003		LUG, SOLDER, NO. 6	
12	180-153		TERMINAL	
14	471-075		SCREW, MACH, NO. 6-32 X 1.00	
15	478-159		SCREW, WOOD, RD HD, NO. 6 X 1/2 IN LG	
17	501-009		WASHER, NO. 6	
			*ALTEC LANSING	

B

SHEET 1 OF 1

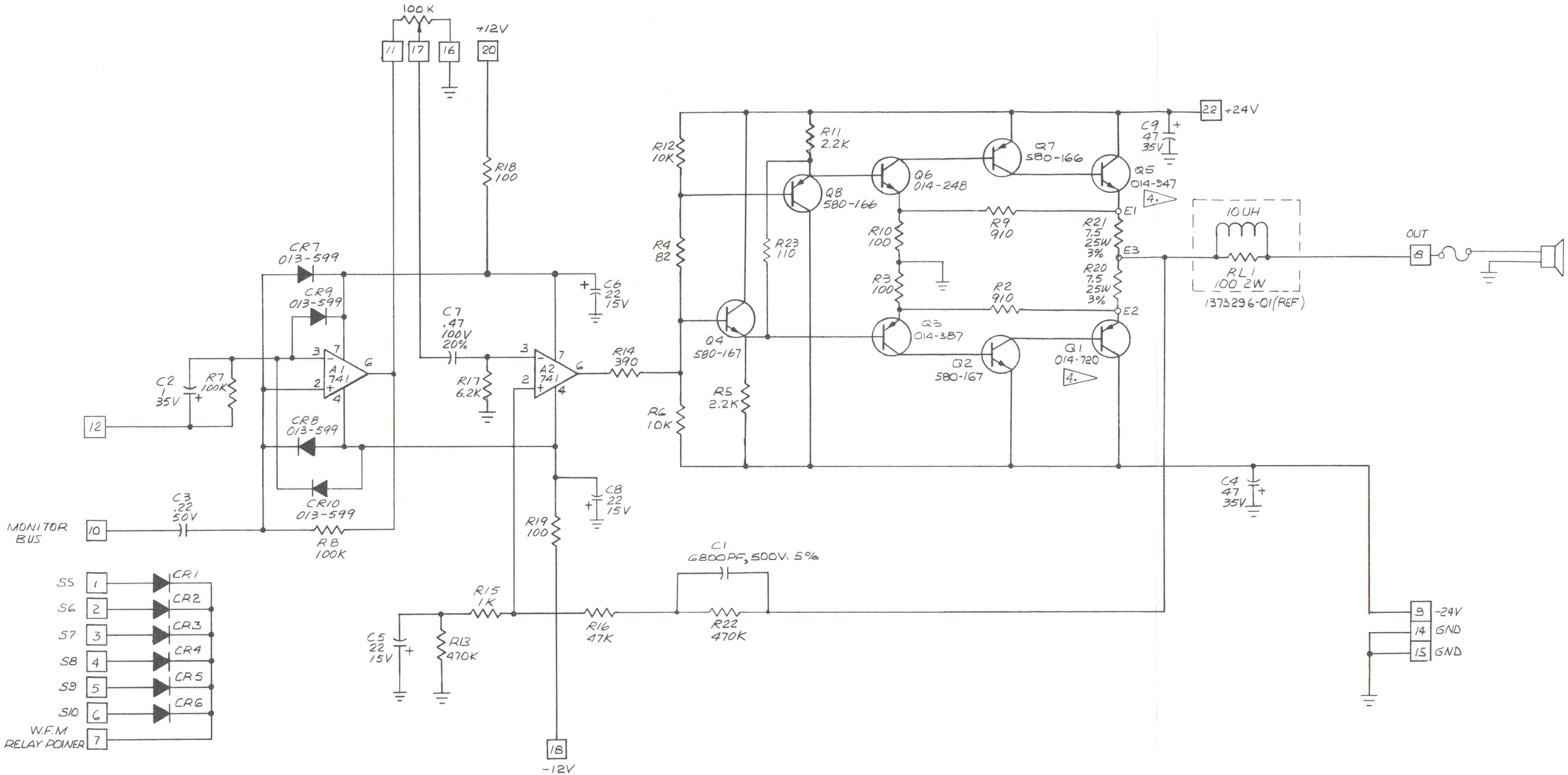

UNLESS OTHERWISE SPECIFIED:

1. ALL RESISTANCE VALUES ARE IN OHMS 1/2 W 5%
2. ALL CAPACITANCE VALUES ARE IN MICROFARADS, 10%
3. ALL DIODES ARE 013-678
4. TRANSISTORS Q1 AND Q5 USE HEATSINK.

I.C. LIST	
REF DESIG.	A1, A2
AMPEX P/N	586-269
VENDOR P/N	F741
VOLTAGE (PIN)	———
GROUND (PIN)	———

FIELD SERVICE COMP SUBST	
AMPEX P/N	NEAREST COML. EQUIV.
013-599	IN914
013-678	IN4385
014-248	2N2222
014-387	2N2907A
014-720	2N3740
014-947	2N3766
580-166	2N5322
580-167	2N5320

REF DESIGNATIONS	
LAST USED	NOT USED
A2 C9 CR10 R22 Q8 E3 RL1	R1

A

Schematic No. 1373260.
Monitor Amplifier PWA

ITEM NO.	AMPEX PART NO.	REFERENCE NUMBER	DESCRIPTION	JEDEC NO. OR MFR. PART NO.
	1373249-02		EDITOR KIT, NTSC/PAL-M (NHA 1373000)	
	1373249-03		EDITOR KIT, PAL/SECAM (NHA 1373000)	
2	1373127-03		EDITOR PWA, NTSC/PAL-M (SEE MODULE NO. 7)	
3	1373467-02		EDITOR PWA, PAL/SECAM (SEE MODULE NO. 7)	
4	1373250-01		HARNESS ASSEMBLY	
8	1373254-03		LENS, SWITCH (CUE REWRITE), REF: S3	
9	1373254-04		LENS, SWITCH (CUE ERASE), REF: S4	
11	1373254-06		LENS, SWITCH (EDIT INHIBIT), REF: S7	
12	1373254-07		LENS, SWITCH (EDIT CMD), REF: S6	
13	1373364		WIRING DIAGRAM, CONT PANEL	
14	060-070	DS3-6,8	LAMP, SWITCH, 28V	335
15	060-079	DS1	LAMP, INDICATOR, 28V, RED	
16	310-105		CLIP, INDICATOR LAMP, REF: DS1	
17	121-162	S3-6,8	SWITCH, HOUSING	
18	501-863		WASHER, PLAIN, NO. 0.250 ID, 0.375 OD	
19	4100105-02		KNOB, BLK, REF: R3	
20	6000005-20		KNOB, BLK, REF: R1,2	
21	1373254-08		LENS, SWITCH (CUE TONE REC), RED, REF: S5	
22	121-211		NUT, DECORATIVE, 1/4-40	
23	230-071		KNOB, LOCK, REF: R3	
24	1373268-02		OVERLAY, EDITOR CONT PANEL	

G

SHEET 1 OF 1

ITEM NO.	AMPEX PART NO.	REFERENCE NUMBER	DESCRIPTION	JEDEC NO. OR MFR. PART NO.
	1373250-01		HARNESS ASSEMBLY (NHA 1373249)	
3	058-066	R3	RESISTOR, VAR, 5K	
4	044-164	R1,2	RESISTOR, VAR, 500K	
6	119-258	S1,7	SWITCH, TOGGLE, DPDT, LOCK TYPE	
7	119-259	S2	SWITCH, TOGGLE, SPDT, LOCK TYPE	
9	121-161	S3,4,5,6,8	SWITCH, PUSHBUTTON, SPDT	
13	166-200		CONTACT, PIN, 20-22 AWG	
14	166-226		CONTACT, PIN, 24-26 AWG	
15	166-227		CONTACT, PIN, 16-18 AWG	
16	167-026	P1	CONNECTOR, PLUG, 24 POS	
19	310-106	DS1	SOCKET, INDICATOR LAMP	
				C

SHEET 1 OF 1

ITEM NO.	AMPEX PART NO.	REFERENCE NUMBER	DESCRIPTION	JEDEC NO. OR MFR. PART NO.
	1373240-09		DUAL TRACK AUDIO KIT, MONO ERASE (NHA 1373000)	
	1373240-10		DUAL TRACK AUDIO KIT, SPLIT ERASE (NHA 1373000)	
1	1373160-01		TRIM, LEFT FRONT	
4	1373241-01		DUAL TRACK HEAD ASSY, MONO ERASE	
5	1373241-02		DUAL TRACK HEAD ASSY, SPLIT ERASE	
6	1373478-04		AUDIO PWA, BD NO. 9/10	
8	1373384-02		AUDIO 2 REAR ASSEMBLY	
11	1373474-06		DUAL CHANNEL AUDIO PREAMP PWA	
12	302-200		CLAMP, CABLE, 3/8 ID	
				E

SHEET 1 OF 1

ITEM NO.	AMPEX PART NO.	REFERENCE NUMBER	DESCRIPTION	JEDEC NO. OR MFR. PART NO.
	1373241-01		DUAL TRACK HEAD ASSEMBLY, MONO ERASE (NHA 1373240)	
	1373241-02		DUAL TRACK HEAD ASSEMBLY, SPLIT ERASE (NHA 1373240)	
1	14589-01		STUD, SHIELD MTG	
2	14592-01		SHIELD ASSEMBLY	
3	50605-01		POST, GUIDE	
4	50607-01		CAP, GUIDE POST	
5	50608-01		BASE, GUIDE POST	
6	1373419-01		POST ASSEMBLY, AUDIO/CUE REC/REPRO HEADS	
7	1373419-02		POST ASSEMBLY, AUDIO/CUE ERASE HEADS	
8	51235-10		POST ASSEMBLY, AUDIO HEAD	
9	51242-01		SPACER, CONNECTOR MTG	
10	1231139-02		MONITOR HEAD ASSEMBLY	
11	1361156-01		PLATE, MTG AUDIO HEADS	
12	1361157-01		SHIELD, BASE	
13	1361158-01		BRACKET, PIVOT	
14	1361159-03		BLOCK, PIVOT	
15	1361160-01		PLUNGER	
16	1361161-01		PLATE, SPRING RETAINER	
17	1361190-01		SHIELD, TOP	
18	1361191-01		COVER, TOP	
19	1361252-01		CABLE, AUDIO REC/REPRO	
20	1362748-03		SHIELD, FRONT	
21	1367690-01		SHIELD ASSEMBLY, REC/REPRO POST	
22	1373226-01		CONNECTOR, MTG PLATE	
23	6000035-01		LABEL, IDENT	
25	139-662		CONNECTOR, RECT RECP, 18 PINS	
26	172-004		TERMINAL LUG, SOLDER, RING, TONGUE	
27	352-195		SPRING, COMPRESSION, 0.300 OD	
28	470-018		SCREW, CAP, HEX SOC, NO. 6-32 X 0.375 LG	
29	470-020		SCREW, CAP, HEX SOC, NO. 6-32 X 0.500 LG	
30	470-029		SCREW, CAP, HEX SOC, NO. 8-32 X 0.500 LG	
31	470-137		SCREW, CAP, HEX SOC, NO. 6-32 X 1.125 LG	
32	471-065		SCREW, MACH, PAN HD, XREC, NO. 4-40 X 0.625 LG	
33	471-476		SCREW' CAP FLAT, 82° HD, HEX SOC, NO. 6-32 X 0.375 LG	
34	472-469		SCREW, MACH FLAT, 82° HD, XREC, NO. 2-56 X 0.375 LG	
35	473-324		SCREW, MACH, PAN HD, XREC, NO. 4-40 X 0.250 LG	
36	473-326		SCREW, MACH, PAN HD, XREC, NO. 4-40 X 0.375 LG	
37	473-328		SCREW, MACH, PAN HD, XREC, NO. 4-40 X 0.625 LG	
38	492-032		NUT, HEX, NO. 4-40	
39	502-003		WASHER, LOCK, HELI SPRING, NO. 6	
40	502-004		WASHER, LOCK, HELI SPRING, NO. 8	
50	502-002		WASHER, LOCK, HELI SPRING, NO. 4	
51	501-008		WASHER, PLAIN, NO. 4	

SHEET 1 OF 1

ITEM NO.	AMPEX PART NO.	REFERENCE NUMBER	DESCRIPTION	JEDEC NO. OR MFR. PART NO.
	1373384-02		AUDIO 2 REAR ASSEMBLY (NHA 1373240)	
1	1373385-01		BRACKET, RELAY MTG	
2	1373386-01		BRACKET, CONN MTG	
3	1373387-01		PLATE, TRANSFORMER MTG	
5	1373342		WIRING DIAGRAM	
6	1373393		HARNESS	
7	013-678	CR1	DIODE	1N4385
8	020-799		SOCKET, RELAY	
9	020-800	K1	RELAY, 6 PDT, FORM-C	
10	119-259	S1	SWITCH, SPDT	
11	146-998	J8	CONNECTOR, RECPT, 3 SOC	
12	147-999	J9	CONNECTOR, RECPT, 3 PIN	
14	166-200		CONTACT, PIN, 20–22 AWG, REF: J24	
15	166-226		CONTACT, PIN, 24–26 AWG, REF: J24	
16	166-227		CONTACT, PIN, 16–18 AWG, REF: J24	
17	167-025	J24	CONNECTOR, RECPT, 12 POS	
19	172-004	J7,8,9,T2	LUG, SOLDER, NO. 4	
21	471-067	K1	SCREW, PAN HD, NO. 6–32 X 0.250	
22	471-069		SCREW PAN HD, NO. 6–32 X 0.375	
23	471-329		SCREW, FLAT HD, NO. 4–40 X 0.437	
24	473-327		SCREW, SEMS, NO. 4–40 X 0.500	
25	492-[illegible]		NUT, SMALL PATTERN, NO. 6	
26	496-004		NUT, KEP, NO. 4	
27	496-005		NUT, KEP, NO. 6	
29	502-003		WASHER, SPR LOCK, NO. 6	
30	560-085	T3	TRANSFORMER	
31	560-398	T6	TRANSFORMER	

A

SHEET 1 OF 1

ITEM NO.	AMPEX PART NO.	REFERENCE NUMBER	DESCRIPTION	JEDEC NO. OR MFR. PART NO.
	1373496-01		COOLING PACKAGE ASSEMBLY (NHA 1373000)	
3	1373459-01		FAN ASSEMBLY	
5	250-189		BUMPER, RBR, FOOT	
10	470-047		SCREW, CAP, SOC HD, NO. 1/4-20 X 0.75	
11	471-080		SCREW, NO. 8-32 X 0.50	
12	496-006		NUT, KEP, NO. 8	
14	496-009		NUT, KEP, NO. 1/4-20	

SHEET 1 OF 1

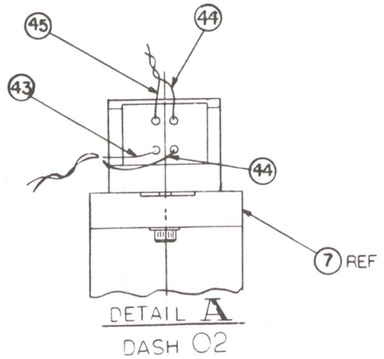

DETAIL A
DASH 02

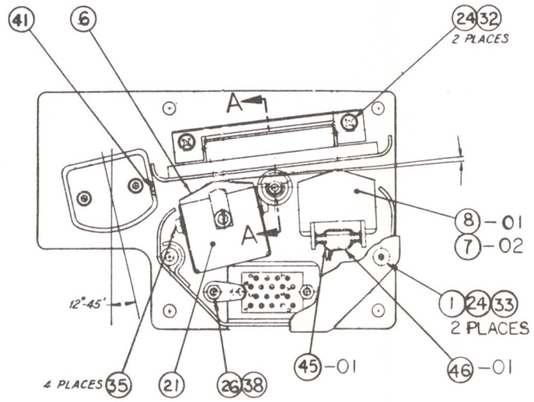

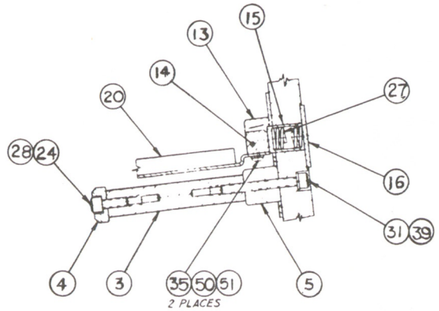

SECTION A-A

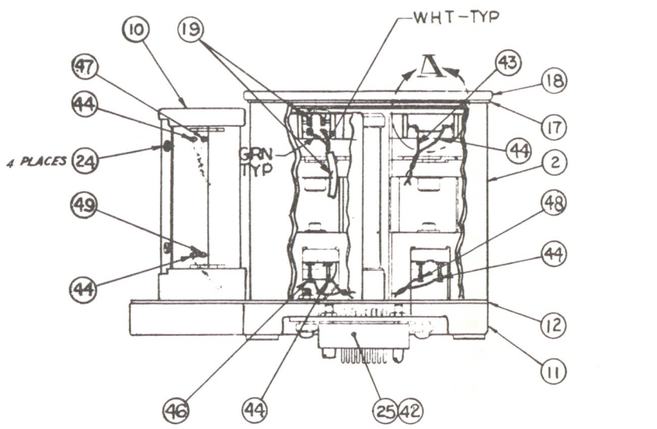

DASH 01 SHOWN

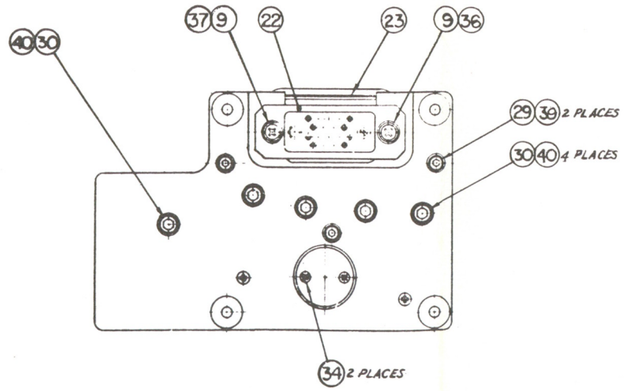

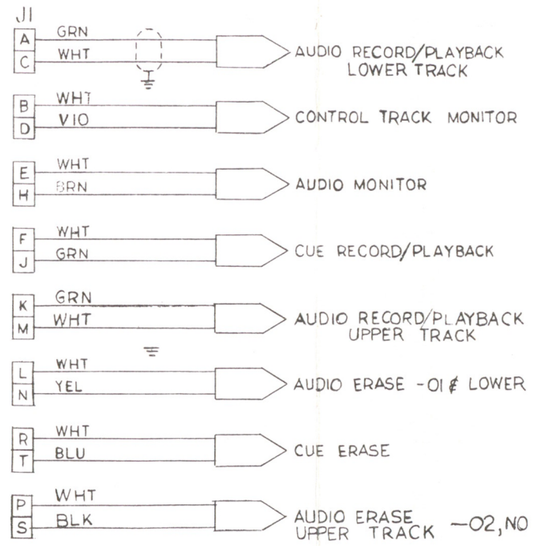

Assembly No. 1373241.
Dual Track Head Assembly, Mono/Split Erase

ITEM NO.	AMPEX PART NO.	REFERENCE NUMBER	DESCRIPTION	JEDEC NO. OR MFR. PART NO.
	1373459-01		FAN ASSEMBLY (NHA 1373496)	
2	1373454-01		HOLDER, FILTER	
6	139-792	P25	CONNECTOR, CIR, PLUG, 3 PIN	
7	171-044		TERMINAL LUG, CRIMP RING, NO. 6	
8	302-160		CLAMP, CABLE, NYLON	
10	475-058		SCREW, SEM, XREC, NO. 6–32 X 0.38 LG	
11	471-071		SCREW, PAN HD, XREC, NO. 6–32 X 0.62 LG	
14	496-004		NUT, KEP, NO. 4–40	
15	492-034		NUT, HEX, NO. 6–32, SM PATT	
16	496-005		NUT, KEP, NO. 6–32	
17	501-008		WASHER, PLAIN, NO. 4	
18	502-003		WASHER, SPR, LOCK, NO. 6	
20	506-013		WASHER "D", NO. 6	
24	591-053		FAN UNIT, AXIAL	
26	999-044		FILTER, 6 IN X 11 IN X 0.500 THK	

SHEET 1 OF 1

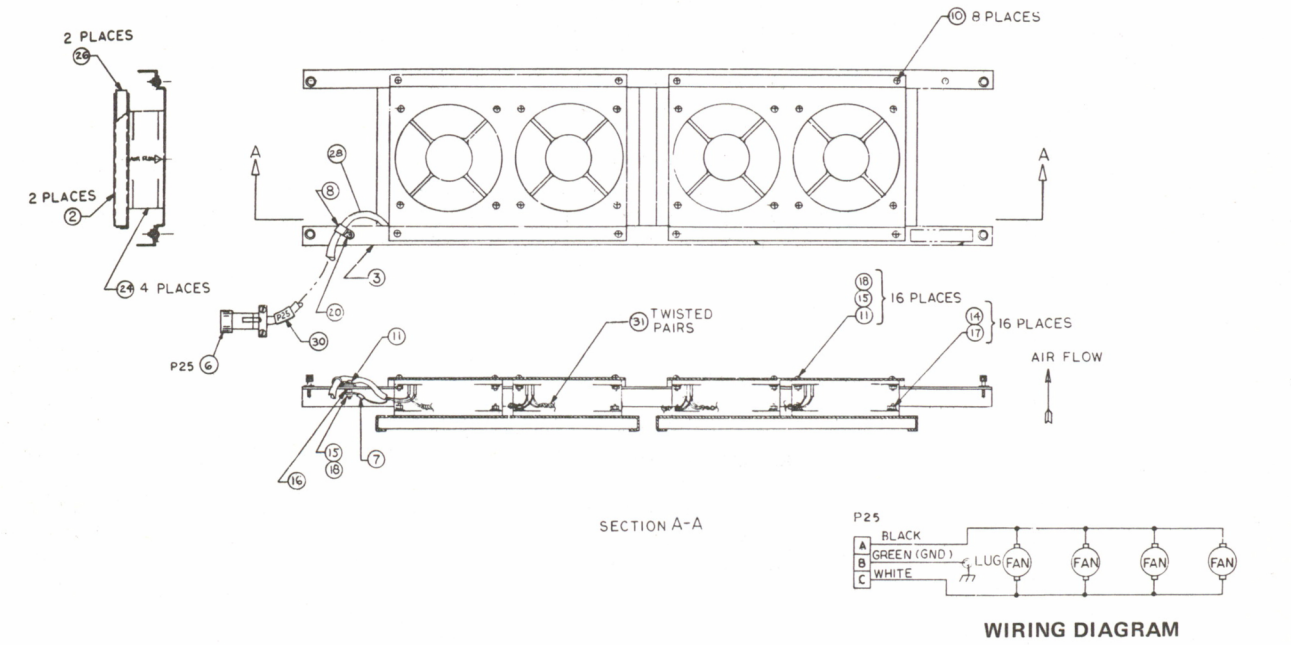

WIRING DIAGRAM

ITEM NO.	AMPEX PART NO.	REFERENCE NUMBER	DESCRIPTION	JEDEC NO. OR MFR. PART NO.
	1373244-01		SERVICE TOOL KIT (NHA 1373000)	
1	1209742-01		DIAL INDICATOR ASSY	
2	1214417-01		MICRO-SCOPE, OMAG	
5	1360943-01		ATTACHMENT, PRESSURE MEASUREMENT	
7	1373377-01		EXTENDER CARD ASSY	
8	1373380-01		PULLER, PCB	
10	4040575-30		DEMAGNETIZER, HEAD	
12	50074-01		SCREW, VIDEO HD MTG	
13	52420-01		GUIDE POSITIONER	
16	060-011		LAMP	
17	060-070		LAMP, 28V, NO. 335	335
18	060-077		LAMP, BLUE	
19	060-079		LAMP, RED	
20	060-391		LAMP, 28V	
21	060-500		BULB, FLUORESCENT	
23	070-303		FUSE, 20 AMP, FAST BLO	
25	087-199		PAINT, LACQUER, LT GRY	A0C-111
26	087-200		PAINT, LACQUER, MED GRY	A0C-112
27	087-550		PAINT, LACQUER, BLK	A0C-108
28	087-756		PAINT, LACQUER, AL MET	A0C-200
32	144-003		CONNECTOR, AUDIO, FEM	
33	145-009		CONNECTOR, AUDIO, MALE	
36	166-226		CONTACT, PINS, 24 AWG	
37	166-224		CONTACT, SOC, 24 AWG	
39	166-850		EXTRACTOR, KIT	
40	166-857		CONNECTOR, 34 PIN	
48	602-012		PLUG, SHORTING	
51	360-415		GAUGE, PUSH-PULL, LINEAR 0-72 OZ	
52	360-414		GAUGE, PUSH-PULL, LINEAR 0-36 OZ	
53	650-215		DIAL INDICATOR SCALE, 0-15 LBS	
56	800-790		CLIP, IC	
59			SOLDER SUCKER	SOLDAPULT SS-001
60			SCREWDRIVER	XCELITE X-102
61			SCREWDRIVER	XCELITE X-103
62			SCREWDRIVER	R-144
63			SCREWDRIVER	S-5166
64			ALLEN WRENCH SET	99-PS-40
65			SCREWDRIVER SET	XCELITE PS-88
66			NUT DRIVER SET	XCELITE PS-120

A

SHEET 1 OF 1

ITEM NO.	AMPEX PART NO.	REFERENCE NUMBER	DESCRIPTION	JEDEC NO. OR MFR. PART NO.
	1373034-02		CONSOLE ASSEMBLY (NHA 1373000)	
1	1373325-01		PANEL, SIDE, RH	
2	1373325-02		PANEL, SIDE, LH	
3	1373326-01		FRAME, LWR	
4	1373327-01		FRAME, UPR	
5	1373328-01		DOOR, LWR, CONSOLE ASSY	
6	1373329-01		KEEPER, LCH	
7	1373330-01		PANEL, BOT	
8	1367325-01		HINGE, RESTRAINT	
9	1373462-01		PLATE, MTG FAN	
10	1373326-02		FRAME, LWR	
11	082-053		CASTERS	
13	470-046		SCREW, CAP, HEX SOC, NO. 1/4–20 X 0.62 LG	
15	480-084		BOLT, MACH, HEX HD, NO. 5/16– 18 X 0.75 LG	
16	471-069		SCREW, PAN HD, XREC, NO. 6–32 X 0.38 LG	
18	501-067		WASHER, PLAIN, 1/4	
19	501-009		WASHER, PLAIN, NO. 6	
20	502-003		WASHER, LOCK, SPR, NO. 6	
21	502-006		WASHER, LOCK, SPR, 1/4	
23	498-061		NUT, HEX, FIN, LOCK, 5/16–18	
24	496-005		NUT, HEX, FIN, ASSEM WASH, NO. 6–32	
25	496-006		NUT, HEX, SEMS, NO. 8–32	
26	471-345		SCREW' FLAT HD, 82°, NO. 8–32 X 0.38 LG	
				B

SHEET 1 OF 1

ITEM NO.	AMPEX PART NO.	REFERENCE NUMBER	DESCRIPTION	JEDEC NO. OR MFR. PART NO.
	1373030-01		AIR COMPRESSOR ASSEMBLY (NHA 1373000)	
1	1373383-01		HOSE ASSY	
2	1373378		SCHEMATIC	
3	1367332-01		DRAIN FILTER ASSY	
4	1372239-01		COMPRESSOR	
6	1373361-01		AIR TANK	
7	1373378-01		RELAY BOX ASSEMBLY	
9	024-087		VALVE, AIR, 2-100 PSI (1/8 IPT)	
10	090-126		GAUGE, PRESSURE	
11	250-018		FEET, RBR	
13	370-191		FILTER, AIR	
15	440-064		FITTING, PIPE, 90° ELBOW, 1/4 EPT-1/4 IPT	
16	440-113		FITTING, PIPE, NIPPLE, 1/4 EPT	
17	440-121		COUPLING, FEMALE	
18	440-125		FITTING, PIPE, 90° ELBOW, 1/8 EPT	
19	440-004		FITTING, PIPE, 30° ELBOW, 1/4 EPT	
21	592-289		MUFFLER	
23	601-036		TUBING, 0.250 OD	
26	480-095		BOLT, MACH, HEX HD, 1/4-20 X 5/8 LONG	
27	496-009		NUT, ASSY, 1/4-20	
28	501-067		WASHER, PLAIN	
30	471-089		SCREW, XREC, PAN HD, NO. 10-32 X 1/2 LONG	
31	496-007		NUT, ASSY, NO. 10-32	
32	501-070		WASHER, PLAIN, NO. 10	
33	1373395-01		AIR COMPRESSOR RELAY CABLE ASSY	
34	1211147-20		HOSE ASSY	
				B

SHEET 1 OF 1

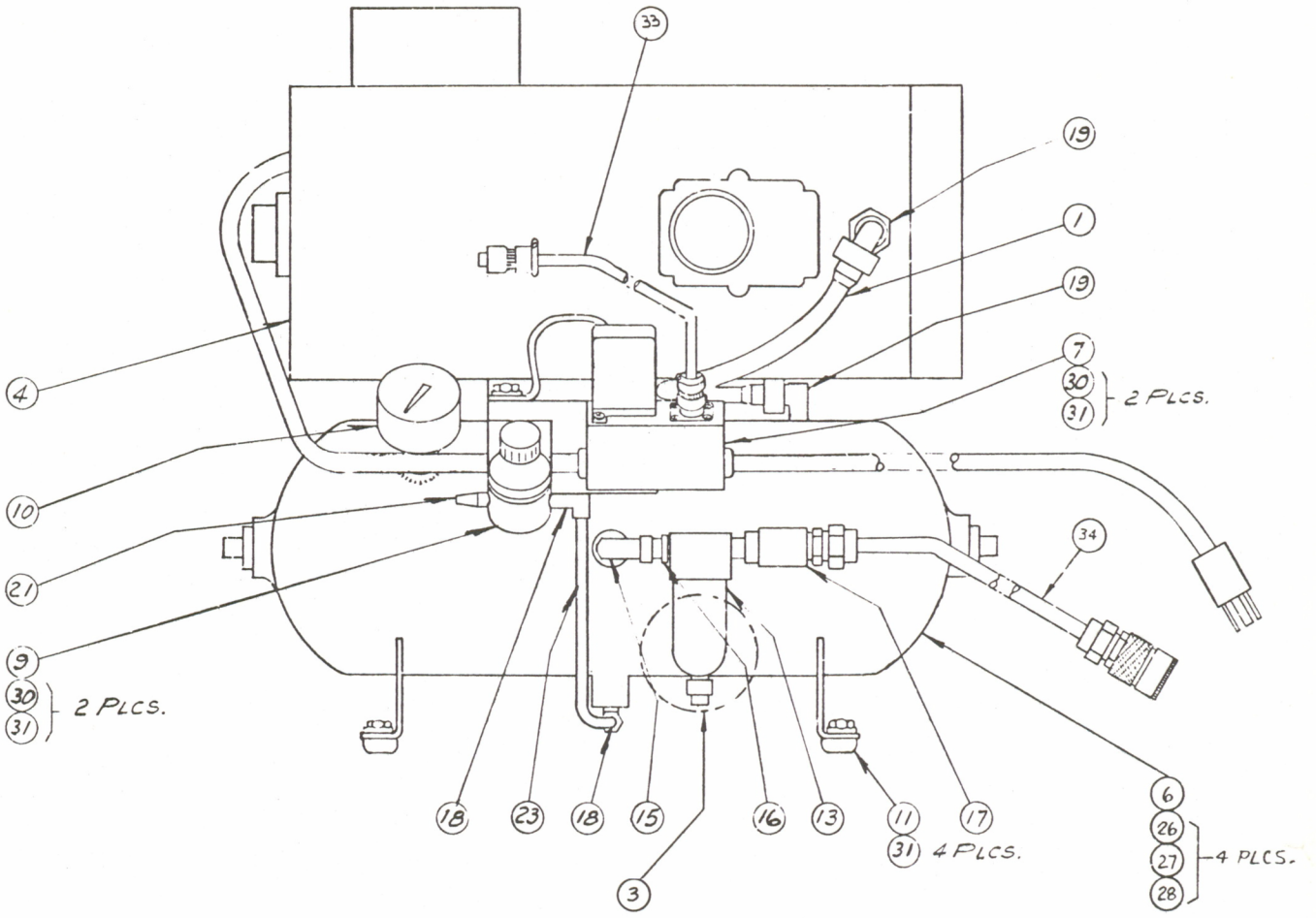

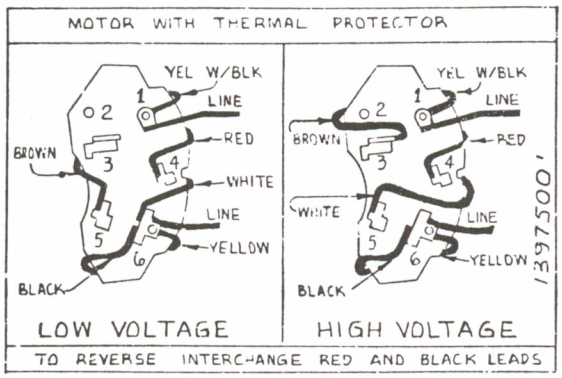

Assembly No. 1373030. Air Compressor Assembly

ITEM NO.	AMPEX PART NO.	REFERENCE NUMBER	DESCRIPTION	JEDEC NO. OR MFR. PART NO.
	1373378-01		RELAY BOX ASSEMBLY (NHA 1373030)	
5	013-678	CR1	DIODE	1N4385
6	020-701	K1	RELAY	
7	084-030	P1	CORD	
8	020-808		SPRING, HLDN, REF: K1	
9	143-009	J1	CONNECTOR, RECEPTACLE	
11	150-260		SOCKET, REF: K1	
12	171-001		TERMINAL LUG, CRIMP, SPADE	
13	171-238		TERMINAL LUG, CRIMP	
14	171-070		SPLICE, NO. 22-16 AWG WIRE	
15	264-019		BUSHING, STRAIN RELIEF	
18	471-062		SCREW, XREC, PAN HD, NO. 4-40 X 3/8 LONG	
19	496-004		NUT, ASSY, NO. 4	
20	502-002		WASHER, SPLIT LOCK, NO. 4	
21	471-069		SCREW, PAN HD, NO. 6-32 X 3/8	
22	496-005		NUT, ASSY, WASH, NO. 6-32	
				E

SHEET 1 OF 1

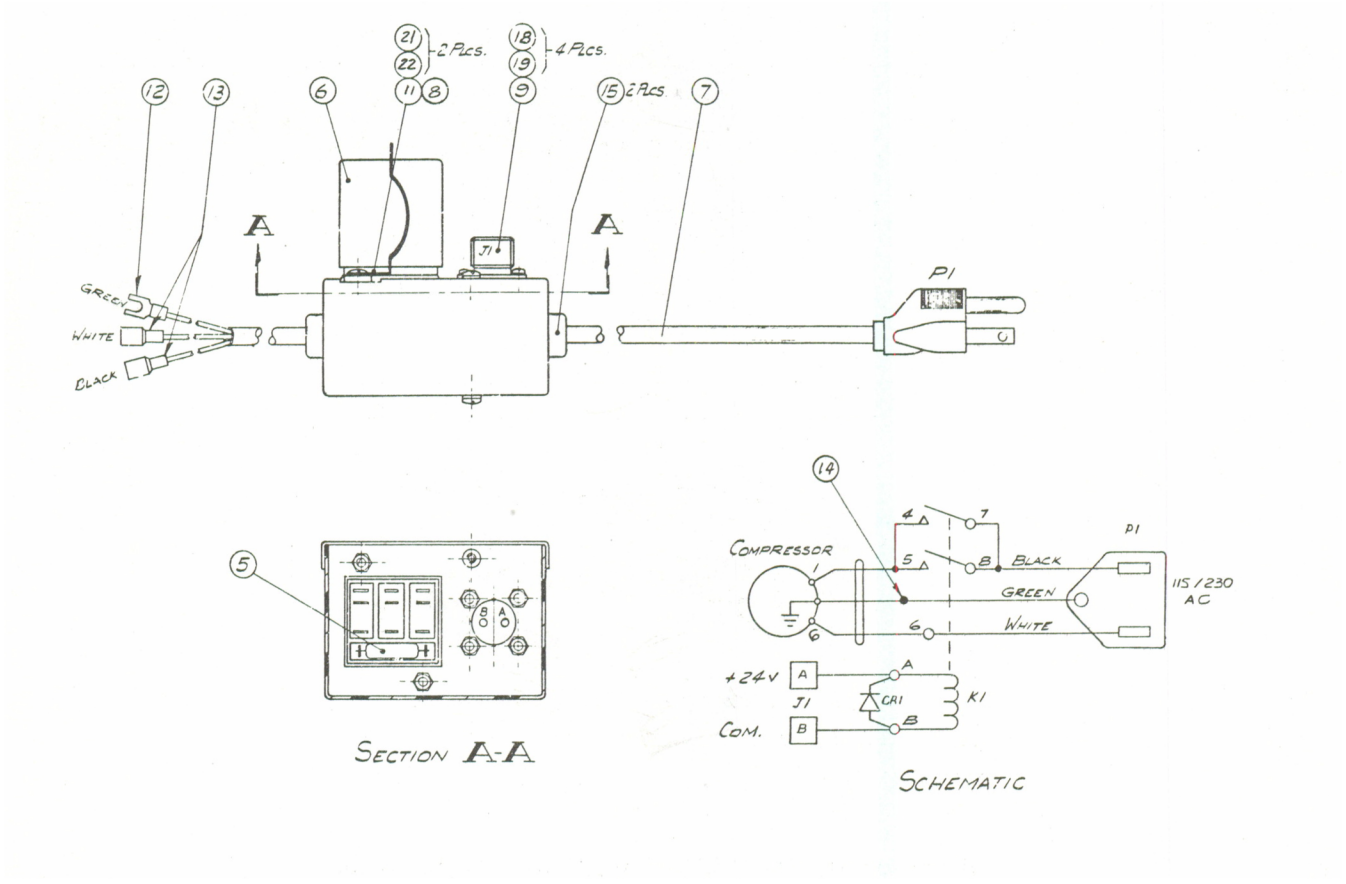

ITEM NO.	AMPEX PART NO.	REFERENCE NUMBER	DESCRIPTION	JEDEC NO. OR MFR. PART NO.
	1373395-01		AIR COMPRESSOR RELAY CABLE ASSEMBLY (NHA 1373030)	
1	140-009		CONNECTOR, CIRCULAR PLUG, 2 SOC	
2	302-010		CLAMP, CABLE	
3	613-078		CABLE, JACK, SINGLE GAUGE, 2 COND, 18 AWG	
				A

SHEET 1 OF 1

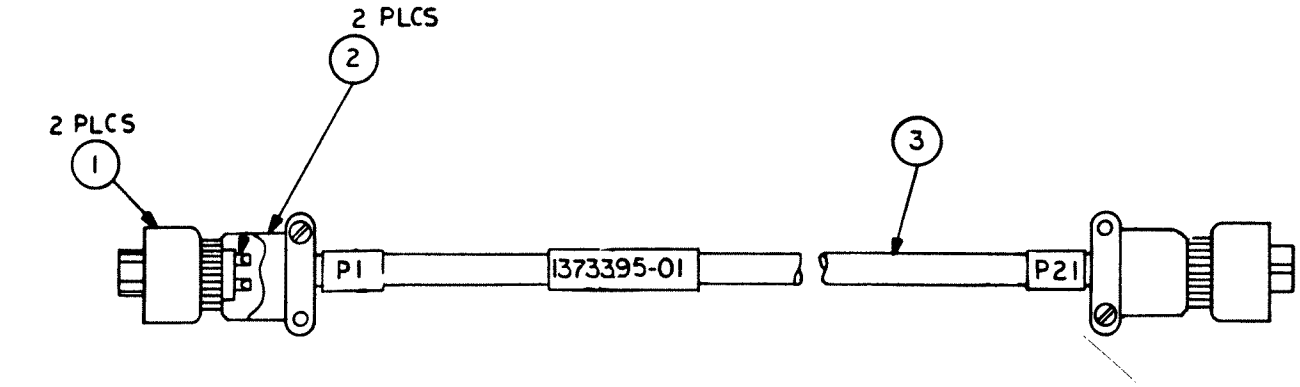

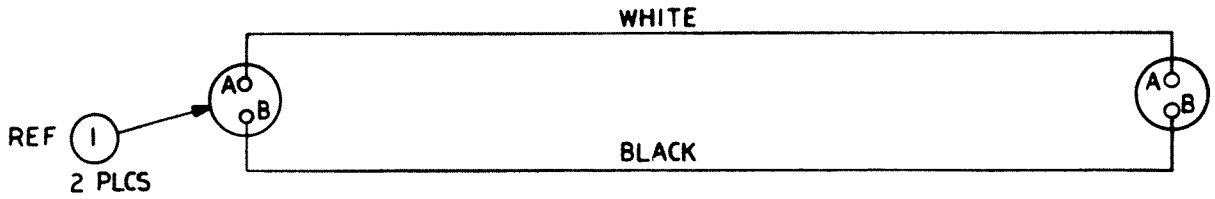

WIRING DIAGRAM